57X Maintenance Manual

Models: 57X

STI-528, ()

Published by
Daimler Trucks North America LLC
4747 N. Channel Ave.
Portland, OR 97217
Printed in U.S.A.

1.01 Foreword....4
1.02 Descriptions of Service Publications....4
1.02.01 Workshop/Service Manual....4
1.02.02 Maintenance Manual....4
1.02.03 Troubleshooting Manual....5
1.02.04 Driver's/Operator's Manual....5
1.02.05 Service Bulletins....5
1.02.06 Parts Technical Bulletins....5
1.02.07 DTNAConnect....5
1.02.08 PartsProX....5
1.02.09 EZWiring....5
1.02.10 Recall Campaigns....5
1.02.11 Field Service Campaigns....5
1.03 Page Description....6

1. Introduction

1.01 Foreword

Foreword

Instructions and procedures are those recommended by Western Star, or the component manufacturer. Maintenance schedules and additional service information are included in the product Maintenance Manual.

IMPORTANT: Descriptions and specifications in this manual were in effect at the time of printing. Daimler Truck North America LLC reserves the right to discontinue models and to change specifications or design at any time without notice and without incurring obligation. Descriptions and specifications contained in this publication provide no warranty, expressed or implied, and are subject to revision and editions without notice.

Refer to https://northamerica.daimlertruck.com/ for more information, or contact Daimler Truck North America LLC at the address below.

Environmental Concerns and Recommendations

Whenever you see instructions in this manual to discard materials, you should attempt to reclaim and recycle them. To preserve our environment, follow appropriate environmental rules and regulations when disposing of materials.



NOTICE:

Do not replace suspension, axle, or steering parts (such as springs, wheels, hubs, and steering gears) with used parts. Used parts may have been subjected to collisions or improper use and have undetected structural damage.

© **2025** Daimler Truck North America LLC

All rights reserved. No part of this publication, in whole or in part, may be translated, reproduced, stored in a retrieval system, or transmitted in any form by any means, electronic, mechanical, photocopying, recording, or otherwise, without the prior written permission of Daimler Truck North America LLC. Daimler Truck North America LLC is a Daimler company.

Daimler Truck North America LLC Service Systems and Documentation

P.O. Box 3849

Portland, OR

97208-3849

1.02 Descriptions of Service Publications

1.02.01 Workshop/Service Manual

Daimler Truck North America LLC distributes the following major service publications in paper and electronic formats.

Refer to Workshop/service manuals contain service and repair information for all vehicle systems and components, except for major components such as engines, transmissions, and rear axles. Each workshop/service manual section is divided into subjects that can include general information, principles of operation, removal, disassembly, assembly, installation, and specifications.

NOTE: **New Cascadia Workshop Manual** is available in an online format only.

1.02.02 Maintenance Manual

Maintenance manuals contain routine maintenance procedures and intervals for vehicle components and systems. They have information such as lubrication procedures and tables, fluid replacement procedures, fluid capacities, specifications, and procedures for adjustments and for checking the tightness of fasteners. Maintenance manuals do not contain detailed repair or service information. Maintenance manuals should not be used for covering plant quality or quality assurance

issues. The purpose of maintenance manuals is to increase the life of the component being maintained. These are recommendations, not requirements.

1.02.03 Troubleshooting Manual

Troubleshooting manuals contain diagnostic procedures for determining causes of problems in vehicle components and systems. Information on multiplexing diagnosis is included. These manuals are organized by functional systems, such as cab, chassis, and powertrain. Troubleshooting manuals do not contain repair or service information.

NOTE: **New Cascadia Electrical Systems and Troubleshooting Manual** is available in an online format only.

1.02.04 Driver's/Operator's Manual

Driver's/operator's manuals contain information needed to enhance the driver's understanding of how to operate and care for the vehicle and its components. Each manual contains a chapter that covers pre-trip and post-trip inspections, and daily, weekly, and monthly maintenance of vehicle components. Driver's/operator's manuals do not contain detailed repair or service information.

1.02.05 Service Bulletins

Service bulletins provide the latest service tips, field repairs, product improvements, and related information. Some service bulletins are updates to information in the workshop/service manual. These bulletins take precedence over workshop/service manual information, until the latter is updated; at that time, the bulletin is usually canceled. The service bulletins manual is available only to dealers. When doing service work on a vehicle system or part, check for a valid service bulletin for the latest information on the subject.

IMPORTANT: Before using a particular service bulletin, check the current service bulletin validity list to be sure the bulletin is valid.

1.02.06 Parts Technical Bulletins

Parts technical bulletins provide information on parts. These bulletins contain lists of parts and BOMs needed to do replacement and upgrade procedures.

1.02.07 DTNAConnect

Web-based repair, service, and parts documentation can be accessed using the following applications on the

DTNAConnect provides Web-based access to the most up-to-date versions of the publications listed above. In addition, the Service Solutions feature provides diagnostic assistance with Symptoms Search, by connecting to a large knowledge base gathered from technicians and service personnel. Search results for both documents and service solutions can be narrowed by initially entering vehicle identification data.

1.02.08 PartsProX

PartsProX® is an electronic parts catalog system, showing the specified vehicle's build record.

1.02.09 EZWiring

EZWiring™ makes Freightliner, Sterling, Western Star, Thomas Built Buses, and Freightliner Custom Chassis Corporation products' wiring drawings and floating pin lists available online for viewing and printing. EZWiring can also be accessed from within PartsPro.

1.02.10 Recall Campaigns

Warranty-related service information available on the

Recall campaigns cover situations that involve service work or replacement of parts in connection with a recall notice. These campaigns pertain to matters of vehicle safety. All recall campaigns are distributed to dealers; customers receive notices that apply to their vehicles.

1.02.11 Field Service Campaigns

Field service campaigns are concerned with non-safety-related service work or replacement of parts. All field service campaigns are distributed to dealers; customers receive notices that apply to their vehicles.

1.03 Page Description

For an example of a Maintenance Manual page, see Fig.1,Example of a Maintenance Manual Page.

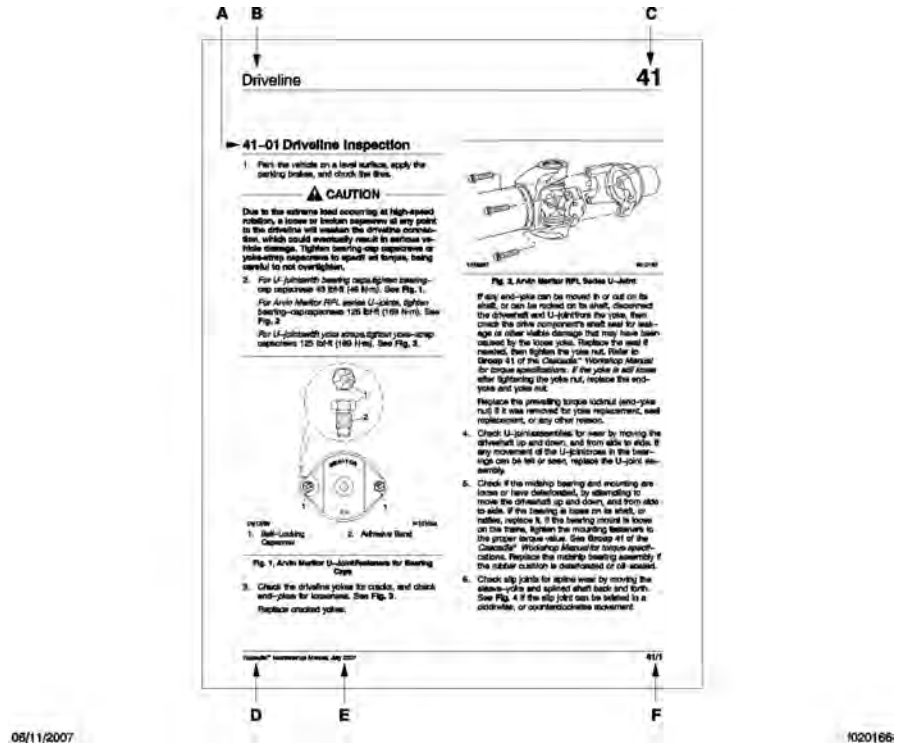

Fig 1, Example of a Maintenance Manual Page

2.01 Determining Scheduled Maintenance Intervals: 00–01 8
2.02 Service Schedule Table: 00–02 8
2.03 Vehicle Maintenance Schedule Table: 00–03 9
2.04 Initial Maintenance (IM) Operations: 00–04 14
2.05 M1 Maintenance Interval Operations:00–05 14
2.06 M2 Maintenance Interval Operations:00–06 15
2.07 M3 Maintenance Interval Operations:00–07 16
2.08 Maintenance Operation Sets Table: 00–08 17
2.09 Noise Emission Controls Maintenance: 00–09 19
2.09.01 Noise Emission Controls Maintenance 19
2.09.02 Maintenance Instructions 20
2.10 Verification of Inspections Log 20

2. General Information

2.01 Determining Scheduled Maintenance Intervals: 00–01

Performing regular maintenance on your Western Star vehicle will help ensure that your vehicle delivers safe reliable service and optimum performance for years to come. Failure to follow a regular maintenance program can result in inefficient operation and unscheduled down time.

To determine the correct maintenance intervals for your vehicle, you must first determine the type of service or conditions the vehicle will be operating in. Generally, over-the-road vehicles operate under conditions that fall within one of the two types of service described. Before placing your new vehicle in service, determine the type of service (Service Schedule I or II) that applies to the intended use of the vehicle. After determining the vehicle's type of service, refer to the service schedule table or the vehicle maintenance schedule table to determine how often maintenance should be performed.

When the vehicle reaches the distance given for a maintenance interval, see the Maintenance Interval Operation Table for a list of the maintenance operations to be performed at that maintenance interval. Use the maintenance operation reference numbers to find detailed instructions in the manual on each operation.

Types of Service

Service Schedule I (short-haul transport) applies to vehicles that annually travel less than 60,000 miles (100 000 kilometers) and operate under normal conditions. Examples of Schedule I usage are: operation primarily in cities and densely populated areas; local transport with infrequent freeway travel; or high percentage of stop-and-go travel.

Service Schedule II (long-haul transport) is for vehicles that annually travel *more than* 60,000 miles (100 000 kilometers) with minimal city or stop-and-go operation. Examples of Schedule II usage are: regional delivery that is mostly freeway miles; interstate transport; or any road operation with high annual mileage.

NOTE: Maintenance instructions in this manual are based on average vehicle use and normal operating conditions. Unusual vehicle operating conditions may require service at more frequent intervals.

2.02 Service Schedule Table: 00–02

Table 1, Service Schedule

Service Schedule	Maintenance Interval Operation	Maintenance Interval		
		Frequency	Miles	km
Schedule I (Short-Haul Transport) vehicles that annually travel less than 60,000 miles (100 000 km)	Initial Maintenance (IM)	first	10,000	16 000
	Maintenance 1 (M1)	every	10,000	16 000
	Maintenance 2 (M2)	every	50,000	80 000
	Maintenance 3 (M3)	every	150,000	240 000
Schedule II (Long-Haul Transport) vehicles that annually travel over 60,000 miles (100 000 km)	Initial Maintenance (IM)	first	25,000	40 000
	Maintenance 1 (M1)	every	25,000	40 000
	Maintenance 2 (M2)	every	100,000	161 000
	Maintenance 3 (M3)	every	300,000	483 000

Table 1, Service Schedule

2.03 Vehicle Maintenance Schedule Table: 00–03

Table 2, Maintenance for Service Schedule I

Maintenance for Service Schedule I				
Maint. No.	Maintenance Interval	Service Date	Service Schedule I	
			Miles	km
1st	IM and M1		10,000	16 000
2nd	M1		20,000	32 000
3rd	M1		30,000	48 000
4th	M1		40,000	64 000
5th	M1 and M2		50,000	80 000
6th	M1		60,000	96 000
7th	M1		70,000	112 000
8th	M1		80,000	128 000
9th	M1		90,000	144 000
10th	M1 and M2		100,000	160 000
11th	M1		110,000	176 000
12th	M1		120,000	192 000
13th	M1		130,000	208 000
14th	M1		140,000	224 000
15th	M1, M2, and M3		150,000	240 000
16th	M1		160,000	256 000
17th	M1		170,000	272 000
18th	M1		180,000	288 000
19th	M1		190,000	304 000
20th	M1 and M2		200,000	320 000
21st	M1		210,000	336 000
22nd	M1		220,000	352 000
23rd	M1		230,000	368 000
24th	M1		240,000	384 000

25th	M1 and M2		250,000	400 000
26th	M1		260,000	416 000
27th	M1		270,000	432 000
28th	M1		280,000	448 000
29th	M1		290,000	464 000
30th	M1, M2, and M3		300,000	480 000
31st	M1		310,000	496 000
32nd	M1		320,000	512 000
33rd	M1		330,000	528 000
34th	M1		340,000	544 000
35th	M1 and M2		350,000	560 000
36th	M1		360,000	576 000
37th	M1		370,000	592 000
38th	M1		380,000	608 000
39th	M1		390,000	624 000
40th	M1 and M2		400,000	640 000
41st	M1		410,000	656 000
42nd	M1		420,000	672 000
43rd	M1		430,000	688 000
44th	M1		440,000	704 000
45th	M1, M2, and M3		450,000	720 000
46th	M1		460,000	736 000
47th	M1		470,000	752 000
48th	M1		480,000	768 000
49th	M1		490,000	784 000
50th	M1 and M2		500,000	800 000
51st	M1		510,000	820 000
52nd	M1		520,000	837 000
53rd	M1		530,000	853 000

54th	M1		540,000	869 000
55th	M1 and M2		550,000	885 000
56th	M1		560,000	901 000
57th	M1		570,000	917 000
58th	M1		580,000	933 000
59th	M1		590,000	949 000
60th	M1, M2, and M3		600,000	965 000
61st	M1		610,000	982 000
62nd	M1		620,000	998 000
63rd	M1		630,000	1 014 000
64th	M1		640,000	1 030 000
65th	M1 and M2		650,000	1 046 000
66th	M1		660,000	1 062 000
67th	M1		670,000	1 078 000
68th	M1		680,000	1 094 000
69th	M1		690,000	1 110 000
70th	M1 and M2		700,000	1 127 000
71st	M1		710,000	1 143 000
72nd	M1		720,000	1 159 000
73rd	M1		730,000	1 175 000
74th	M1		740,000	1 191 000
75th	M1, M2, and M3		750,000	1 207 000
76th	M1		760,000	1 223 000
77th	M1		770,000	1 239 000
78th	M1		780,000	1 255 000
79th	M1		790,000	1 271 000
80th	M1 and M2		800,000	1 287 000
81st	M1		810,000	1 304 000
82nd	M1		820,000	1 320 000

83rd	M1		830,000	1 340 000
84th	M1		840,000	1 352 000
85th	M1 and M2		850,000	1 370 000
86th	M1		860,000	1 384 000
87th	M1		870,000	1 400 000
88th	M1		880,000	1 416 000
89th	M1		890,000	1 432 000
90th	M1, M2, and M3		900,000	1 448 000
91st	M1		910,000	1 465 000
92nd	M1		920,000	1 481 000
93rd	M1		930,000	1 500 000
94th	M1		940,000	1 513 000
95th	M1 and M2		950,000	1 530 000
96th	M1		960,000	1 550 000
97th	M1		970,000	1 561 000
98th	M1		980,000	1 577 000
99th	M1		990,000	1 593 000
100th	M1 and M2		1,000,000	1 609 000

Table 2, Maintenance for Service Schedule I

Table 3, Maintenance for Service Schedule II

Maintenance for Service Schedule II				
Maint. No.	**Maintenance Interval**	**Service Date**	**Service Schedules II**	
			Miles	**km**
1	IM and M1		25,000	40 000
2	M1		50,000	80 000
3	M1		75,000	121 000
4	M1 and M2		100,000	161 000
5	M1		125,000	201 000
6	M1		150,000	241 000

7	M1		175,000	281 000
8	M1 and M2		200,000	322 000
9	M1		225,000	362 000
10	M1		250,000	402 000
11	M1		275,000	443 000
12	M1, M2, and M3		300,000	483 000
13	M1		325,000	523 000
14	M1		350,000	563 000
15	M1		375,000	604 000
16	M1 and M2		400,000	644 000
17	M1		425,000	684 000
18	M1		450,000	724 000
19	M1		475,000	764 000
20	M1 and M2		500,000	805 000
21	M1		525,000	845 000
22	M1		550,000	885 000
23	M1		575,000	925 000
24	M1, M2, and M3		600,000	966 000
25	M1		625,000	1 005 800
26	M1		650,000	1 046 000
27	M1		675,000	1 086 000
28	M1 and M2		700,000	1 127 000
29	M1		725,000	1 167 000
30	M1		750,000	1 207 000
31	M1		775,000	1 248 000
32	M1 and M2		800,000	1 287 000
33	M1		825,000	1 328 000
34	M1		850,000	1 368 000
35	M1		875,000	1 408 000

36	M1, M2, and M3		900,000	1 448 000
37	M1		925,000	1 490 000
38	M1		950,000	1 529 000
39	M1		975,000	1 569 000
40	M1 and M2		1,000,000	1 609 000

Table 3, Maintenance for Service Schedule II

2.04 Initial Maintenance (IM) Operations: 00–04

The Initial Maintenance table lists all maintenance operations that are to be performed at the initial maintenance (IM) interval. Maintenance operation numbers are reference numbers used to help you find detailed instructions in this manual on the maintenance operations to be performed. All operations listed in the table, along with the operations listed in the applicable M1 maintenance interval table, must be performed to complete the initial maintenance (IM).

Table 4, Initial Maintenance (IM) Operations for Service Schedules I and II

Maintenance Operation Number	Initial Maintenance (IM) Operations for Service Schedules I and II	Check
2.05	2.05 M1 Maintenance Interval Operations:00–05	
9.04	9.04 Frame Fastener Torque Check	
10.02.05	10.02.05 Suspension U-Bolt Torque Check	
11.05.01	11.05.01 Checking the Drive Axle Alignment	
17.04	17.04 Tightening the Fuel Tank Band-Nut	

Table 4, Initial Maintenance (IM) Operations for Service Schedules I and II

2.05 M1 Maintenance Interval Operations:00–05

The M1 Maintenance Interval Operations tables list all maintenance operations that are to be performed at the M1 maintenance interval. Maintenance operation numbers are reference numbers used to help you find detailed instructions in this manual on the maintenance operations to be performed.

IMPORTANT: After performing all operations listed in this table, perform all daily, weekly, and monthly maintenance operations listed in the "Pretrip and Post-Trip Inspections and Maintenance" chapter of the **57X Driver's Manual**.

Table 5, M1 Maintenance Interval Operations for Service Schedules I and II

Maintenance Operation Number	M1 Maintenance Interval Operations for Service Schedules I and II	Check
4.01	4.01 Safety Precautions	
7.02	7.02 Lubrication of the Clutch Release Bearing[1]	
9.02.01	9.02.01 General information	
9.03.01	9.03.01 General information	
11.06.01	11.06.01 General Information	

13.01	13.01 Wheel Nut Check	
13.02	13.02 Tire Check	
14.02	14.02 Inspection of the Driveline	
14.03.01	14.03.01 Lubrication of the Universal Joint	
15.03.01	15.03.01 AD–9[2]	
15.06.01	15.06.01 Parking Brake Operational Check	
15.07	15.07 Haldex Slack Adjuster Lubrication	
15.08.01	15.08.01 General Information	
15.11	15.11 Replacement of the WABCO System Saver Air Dryer Desiccant Cartridge	
15.12.01	15.12.01 General Information[3]	
17.02	17.02 Fuel Filter Replacement	
17.03.01	17.03.01 Detroit	
18.02.01	18.02.01 General Information	
20.03	20.03 Aerodynamic Component Inspection	

1. On vehicles equipped with Detroit transmissions, the release bearing does not need to be lubricated. On vehicles equipped with Eaton Fuller UltraShift PLUS transmissions, lubricate the release bearing every 50,000 miles (80 000 km) or three months.
2. If equipped with an oil-coalescing desiccant cartridge, replace the cartridge once a year, regardless of mileage. Otherwise use the M3 maintenance interval.
3. Complete this procedure every 25,000 miles (40 225 km), three months, or 500 operating hours, whichever comes first.

Table 5, M1 Maintenance Interval Operations for Service Schedules I and II

2.06 M2 Maintenance Interval Operations:00–06

The M2 Maintenance Interval Operations tables list all maintenance operations that are to be performed at the M2 maintenance interval. Maintenance operation numbers are reference numbers used to help you find detailed instructions in this manual on the maintenance operations to be performed. Perform all M1 maintenance interval operations at the M2 maintenance interval.

Table 6, M2 Maintenance Interval Operations for Service Schedules I and II

Maintenance Operation Number	M2 Maintenance Interval Operations for Service Schedules I and II	Check
2.05	2.05 M1 Maintenance Interval Operations:00–05	
5.02	5.02 Alternator, Battery, and Starter Connections Check	
6.02	6.02 Pressure Relief Cap Check	
6.04.01	6.04.01 Fan Clutch Check (Noise Emission Control)	
8.02	8.02 Detroit® Automated Transmission Fluid Change and Magnetic Plug Cleaning	
8.04	8.04 Detroit® Automated Transmission Fluid Level Inspection	
8.06.01	8.06.01 General information	

8.07	8.07 Eaton Fuller Manual Transmission Air Filter/ Regulator Check, Cleaning, or Replacement	
10.02.01	10.02.01 General Information	
10.02.05	10.02.05 Suspension U-Bolt Torque Check	
11.02.01	11.02.01 Detroit® Axles[1]	
11.03	11.03 Inspection of the Tie Rod	
11.04	11.04 Lubrication of the Tie Rod[2]	
12.03.01	12.03.01 Detroit® Model 4 and Model 6	
15.02	15.02 Inspection of the Air Brake System Valve	
15.04	15.04 Inspection of the Air Dryer	
15.09.01	15.09.01 General Information	
16.02	16.02 Inspection of the Drag Link	
16.04	16.04 Lubrication of the Power Steering Gear	
16.05	16.05 Lubrication of the Drag Link	
19.01	19.01 Inspection and Cleaning the Trailer Cable	
20.01	20.01 Mirror Folding Check	
21.02.01	21.02.01 Preliminary Checks	
21.03.01	21.03.01 General Information	

1. For Schedule I vehicles with Detroit axles, complete this procedure once a year or every 25,000 miles (40 000 km), whichever comes first
2. For Schedule I vehicles with Detroit axles, complete this procedure once a year or every 25,000 miles (40 000 km), whichever comes first

Table 6, M2 Maintenance Interval Operations for Service Schedules I and II

2.07 M3 Maintenance Interval Operations:00–07

The M3 Maintenance Interval Operations table lists all maintenance operations that are to be performed at the M3 maintenance interval. Maintenance operation numbers are reference numbers used to help you find detailed instructions in this manual on the maintenance operations to be performed. Perform all M1 and M2 maintenance interval operations at the M3 maintenance interval.

Table 7, M3 Maintenance Interval Operations for Service Schedules I and II

Maintenance Operation Number	M3 Maintenance Interval Operations for Service Schedules I and II	Check
2.05	2.05 M1 Maintenance Interval Operations:00–05	
2.06	2.06 M2 Maintenance Interval Operations:00–06	
3.01	3.01 Inspection of the Air Cleaner	
6.03	6.03 Radiator Pressure-Flushing and Coolant Change	
7.03.01	7.03.01 General information	

8.05	8.05 Eaton Fuller Transmission Fluid Change and Magnetic Plug Cleaning[1]	
12.02.01	12.02.01 Detroit® Model 4 and Model 6	
15.03.01	15.03.01 AD–9	
15.10	15.10 Inspection and Lubrication of the Bendix E-6 Foot Control Valve	
15.11	15.11 Replacement of the WABCO System Saver Air Dryer Desiccant Cartridge	
16.03	16.03 Power Steering Fluid and Filter Change	

1. For Eaton Fuller transmissions, fluid change intervals are extended to 500,000 miles (800 000 km) on vehicles filled with synthetic transmission fluid.

Table 7, M3 Maintenance Interval Operations for Service Schedules I and II

2.08 Maintenance Operation Sets Table: 00–08

Table 8, Maintenance Operation Sets

Maint. No.	Operation Description	Service Schedules I and II			
		IM	M1	M2	M3
3.01	3.01 Inspection of the Air Cleaner				•
4.01	4.01 Safety Precautions	•	•	•	•
5.02	5.02 Alternator, Battery, and Starter Connections Check			•	•
6.02	6.02 Pressure Relief Cap Check			•	•
6.03	6.03 Radiator Pressure-Flushing and Coolant Change				•
6.04.01	6.04.01 Fan Clutch Check (Noise Emission Control)[1]			•	•
7.02	7.02 Lubrication of the Clutch Release Bearing	•	•	•	•
7.03.01	7.03.01 General information				•
8.02	8.02 Detroit® Automated Transmission Fluid Change and Magnetic Plug Cleaning			•	
8.04	8.04 Detroit® Automated Transmission Fluid Level Inspection			•	•
8.05	8.05 Eaton Fuller Transmission Fluid Change and Magnetic Plug Cleaning[2]				•
8.06.01	8.06.01 General information			•	•
8.07	8.07 Eaton Fuller Manual Transmission Air Filter/Regulator Check, Cleaning, or Replacement			•	•
9.02.01	9.02.01 General information	•	•	•	•
9.03.01	9.03.01 General information	•	•	•	•

9.04	9.04 Frame Fastener Torque Check	•			
10.02.01	10.02.01 General Information			•	•
10.02.05	10.02.05 Suspension U-Bolt Torque Check	•		•	•
11.02.01	11.02.01 Detroit® Axles[3]			•	•
11.03	11.03 Inspection of the Tie Rod			•	•
11.04	11.04 Lubrication of the Tie Rod[4]			•	•
11.05.01	11.05.01 Checking the Drive Axle Alignment	•			
11.06.01	11.06.01 General Information		•	•	•
12.02.01	12.02.01 Detroit® Model 4 and Model 6				•
12.03.01	12.03.01 Detroit® Model 4 and Model 6			•	•
13.01	13.01 Wheel Nut Check	•	•	•	•
13.02	13.02 Tire Check	•	•	•	•
14.02	14.02 Inspection of the Driveline	•	•	•	•
14.03.01	14.03.01 Lubrication of the Universal Joint	•	•	•	•
15.02	15.02 Inspection of the Air Brake System Valve			•	•
15.03.01	15.03.01 AD–9[5]	•	•	•	•
15.04	15.04 Inspection of the Air Dryer			•	•
15.06.01	15.06.01 Parking Brake Operational Check	•	•	•	•
15.07	15.07 Haldex Slack Adjuster Lubrication	•	•	•	•
15.08.01	15.08.01 General Information	•	•	•	•
15.09.01	15.09.01 General Information			•	•
15.10	15.10 Inspection and Lubrication of the Bendix E-6 Foot Control Valve				•
15.11	15.11 Replacement of the WABCO System Saver Air Dryer Desiccant Cartridge	•	•	•	•
15.12.01	15.12.01 General Information[6]		•	•	•
16.02	16.02 Inspection of the Drag Link			•	•
16.03	16.03 Power Steering Fluid and Filter Change				•
16.04	16.04 Lubrication of the Power Steering Gear			•	•
16.05	16.05 Lubrication of the Drag Link			•	•

17.02	17.02 Fuel Filter Replacement		•	•	•
17.03.01	17.03.01 Detroit		•	•	•
17.04	17.04 Tightening the Fuel Tank Band-Nut	•			
18.02.01	18.02.01 General Information	•	•	•	•
19.01	19.01 Inspection and Cleaning the Trailer Cable			•	•
20.01	20.01 Mirror Folding Check			•	•
20.02	20.02 Cab Shock Absorber Bracket Torque Check	•	•	•	•
20.03	20.03 Aerodynamic Component Inspection	•	•	•	•
21.02.01	21.02.01 Preliminary Checks			•	•
21.03.01	21.03.01 General Information			•	•

1. On vehicles equipped with Detroit transmissions, the release bearing does not need to be lubricated. On vehicles equipped with Eaton Fuller UltraShift PLUS transmissions, lubricate the release bearing every 50,000 miles (80 000 km) or three months.
2. For Eaton Fuller transmissions, fluid change intervals are extended to 500,000 miles (800 000 km) on vehicles filled with synthetic transmission fluid.
3. For Schedule I vehicles with Detroit axles, complete this procedure once a year or every 25,000 miles (40 000 km), whichever comes first.
4. If equipped with an oil-coalescing desiccant cartridge, replace the cartridge once a year, regardless of mileage. Otherwise use the M3 maintenance interval.
5. If equipped with an oil-coalescing desiccant cartridge, replace the cartridge once a year, regardless of mileage. Otherwise use the M3 maintenance interval.
6. Complete this procedure every 25,000 miles (40 225 km), three months, or 500 operating hours, whichever comes first.

Table 8, Maintenance Operation Sets

2.09 Noise Emission Controls Maintenance: 00–09

2.09.01 Noise Emission Controls Maintenance

Federal Law, Part 205: Transportation Equipment Noise Emission Controls

Part 205, Transportation Equipment Noise Emission Controls, requires the vehicle manufacturer to furnish, with each new vehicle, such written instructions for the proper maintenance, use, and repair of the vehicle by the ultimate purchaser to provide reasonable assurance of the elimination or minimization of noise-emission-control degradation throughout the life of the vehicle. In compliance with the law, the noise emission controls maintenance information in each applicable group of this manual, in conjunction with the vehicle workshop manual, provides these instructions to owners.

Recommendations for Replacement Parts

Replacement parts used for maintenance or repair of noise emission controls should be genuine Western Star parts. If other than genuine Western Star parts are used for replacement or repair of components affecting noise emission control, the owner should be sure that such parts are warranted by their manufacturer to be equivalent to genuine Western Star parts in performance and durability.

Tampering with Noise Controls is Prohibited

Federal law prohibits the following acts or the causing thereof:

1. The removal or rendering inoperative by any person (other than for purposes of maintenance, repair, or replacement) of any device or element of design incorporated into any new vehicle for the purpose of noise control, prior to its sale or delivery to the ultimate purchaser, or while it is in use.
2. The use of the vehicle after such device or element of design has been removed or rendered inoperative by any person.

Among those acts presumed to constitute tampering are the acts listed below:

Removal of engine noise-deadening panels.

Removal of cab-tunnel or hood noise-deadening panels.

Removal of, or rendering inoperative, the engine speed governor so as to allow engine speed to exceed manufacturer's specifications.

Removal of, or rendering inoperative, the fan clutch, including bypassing the control on any thermostatic fan drive to cause it to operate continuously.

Removal of the fan shroud.

Removal of, or rendering inoperative, exhaust components, including exhaust pipe clamping.

Removal of air intake components.

2.09.02 Maintenance Instructions

Scheduled intervals are in the maintenance tables in this group. A "Verification of Inspections Log" for Groups 20 and 49 follows, and should be filled in each time noise emission controls on the vehicle are inspected.

2.10 Verification of Inspections Log

Verification of Inspections Log, Group 20

Table 9, Verification of Inspections Log — Group 20 — Fan Clutch and Shroud

Verification of Inspections Log — Group 20 — Fan Clutch and Shroud				
Date	Mileage	Item	Cost	Maintenance Facility

Table 9, Verification of Inspections Log — Group 20 — Fan Clutch and Shroud

Verification of Inspections Log, Group 49

Table 10, Verification of Inspections Log — Group 49 — Exhaust System Components

Verification of Inspections Log — Group 49 — Exhaust System Components				
Date	Mileage	Item	Cost	Maintenance Facility

Table 10, Verification of Inspections Log — Group 49 — Exhaust System Components

3.01 Inspection of the Air Cleaner 24

3. Air Intake

3.01 Inspection of the Air Cleaner

Restriction of air flow through the air cleaner element is measured at the tap in the air cleaner outlet. Check the restriction indicator at the air cleaner or in the cab if the vehicle is equipped with a dash-mounted restriction gauge.

Vehicles may be equipped with either a manual-reset restriction indicator with graduations Fig. 2,Manual-Reset Air Restriction Indicator, Graduated or a go/no-go restriction indicator without graduations Fig. 3,Manual-Reset Air Restriction Indicator, Go/No-Go.



Fig 2, Manual-Reset Air Restriction Indicator, Graduated



Fig 3, Manual-Reset Air Restriction Indicator, Go/No-Go

NOTICE:

Do not use aftermarket air-cleaner elements. Aftermarket air-cleaner elements may not seal the housing correctly, which can lead to engine damage and potentially the loss of warranty. When replacing an air-cleaner element, use only the part listed in PartsPro for the serial number of the vehicle.

1. Inspect the air restriction indicator to see if air restriction equals or exceeds the maximum allowable restriction. For instructions, see of the **57X Workshop Manual**.
2. If necessary, replace the air cleaner element. For air cleaner element replacement instructions, see of the **57X Workshop Manual**.
3. Inspect the air cleaner housing for cracks, leaks, or any other damage. If the air cleaner housing or element is damaged, replace it.

4. Inspect the forward and rear mounting isolators for damage. See Fig.4,Air Cleaner Assembly Ensure the bonds between the rubber and the steel plates are completely intact. See Fig.5,Mounting Isolator If a mounting isolator is damaged, replace it. For isolator replacement instructions, see of the **57X Workshop Manual**.

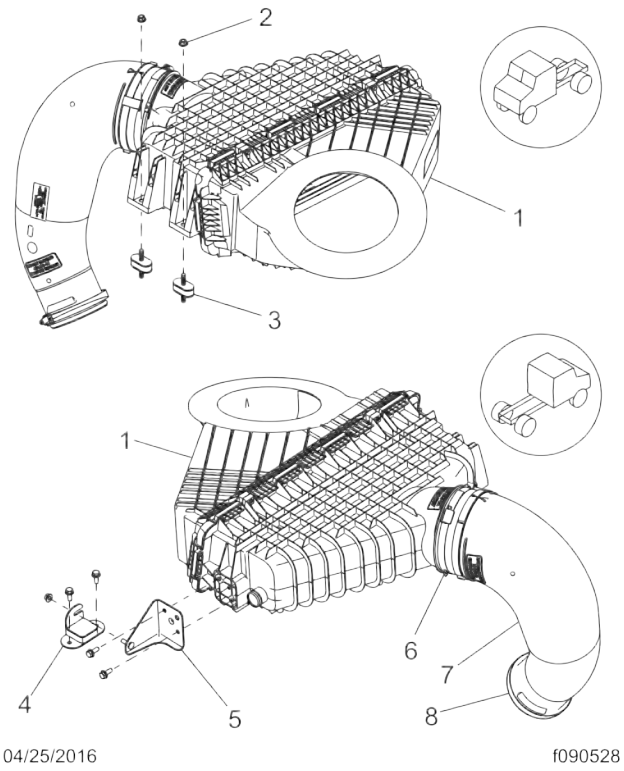

Fig 4, Air Cleaner Assembly

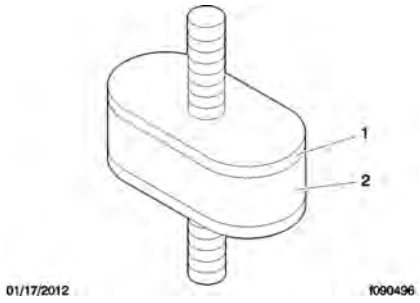

Fig 5, Mounting Isolator

5. Check that the quick connect fitting for the air compressor supply line is fully engaged with the air cleaner. See Fig. 6,Compressor Supply Line Quick Connect

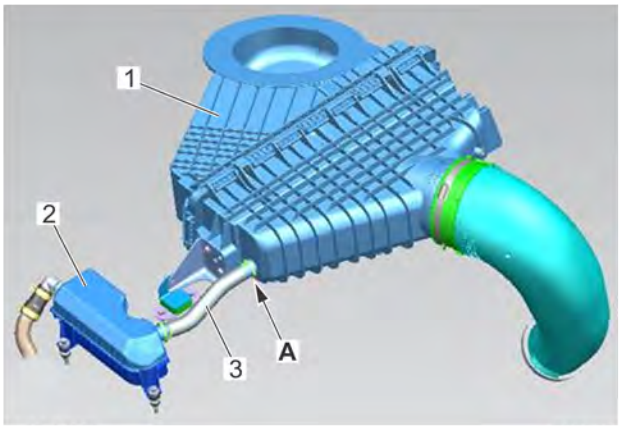

06/02/2016 f090530

A. Check this connection.
1. Air Cleaner
2. Resonator
3. Compressor Supply Line

Fig 6, Compressor Supply Line Quick Connect

6. Reset the air restriction indicator.
7. Each time the air cleaner housing is replaced, perform the procedures in.

4.01 Safety Precautions 28
4.02 Inspection of the Air Compressor 28

4. Air Compressor

4.01 Safety Precautions

Safety Precautions in this section apply to all procedures within this group.



DANGER:

When working on the vehicle, shut down the engine or motor, set the parking brake, and chock the tires. Before working under the vehicle, always place jack stands under the frame rails to ensure the vehicle cannot drop. Failure to follow these steps could result in serious personal injury or death.

4.02 Inspection of the Air Compressor

Inspect the air compressor intake hoses and connections at the air intake at the air cleaner, the resonator, and the air compressor for physical damage or loose connections.

5.01 Safety Precautions 30
5.02 Alternator, Battery, and Starter Connections Check 30

5. Alternators and Starters

5.01 Safety Precautions

Safety Precautions in this section apply to all procedures within this group.

DANGER:

When working on the vehicle, shut down the engine or motor, set the parking brake, and chock the tires. Before working under the vehicle, always place jack stands under the frame rails to ensure the vehicle cannot drop. Failure to follow these steps could result in serious personal injury or death.

5.02 Alternator, Battery, and Starter Connections Check

WARNING:

Batteries generate explosive gas as a by-product of their chemical process. Do not smoke when working around batteries. Put out all flames and remove any source of sparks or intense heat in the vicinity of the battery compartment. Make sure the battery compartment has been completely vented before disconnecting or connecting the battery cables.

Battery acid is extremely harmful if splashed in the eyes or on the skin. Always wear a face shield and protective clothing when working around batteries.

1. Disconnect the batteries.
2. Check the tightness of the alternator bracket fasteners; tighten the fasteners as needed. For torque values, see of the **57X Workshop Manual** .
3. Check that all electrical connections at the alternator and starter are clean. Clean and tighten all charging system electrical connections, including the connections at the starter B terminal and ground terminal, and where the alternator charging cable terminates.
4. Inspect the battery cables for wear, and replace them if they are damaged. Clean the cable connector terminals with a wire brush. See of the **57X Workshop Manual** for adjustment, repair, or replacement instructions.
   - 4.a Clean and tighten the battery ground cable, terminal, and clamps.
   - 4.b Inspect the retainer assembly or battery hold-downs, and the battery box. Replace worn or damaged parts. Remove any corrosion with a wire brush, and wash with a weak solution of baking soda and water. Flush with clean water and dry. Paint the retainer assembly, if needed, to prevent rusting.
   - 4.c Check that foreign objects, such as stones, bolts, and nuts are removed from the battery box.
   - 4.d After cleaning, connect the cables to the batteries and tighten them to the torque specifications listed on the battery, generally 10 to 15 lbf·ft (14 to 20 N·m).
   - 4.e Coat the battery terminals lightly with dielectric grease.
5. Check the alternator wiring for missing insulation, kinks, and heat damage. Replace or repair as needed.
6. Check the terminals on the battery shut-off switch and the magnetic switch. Make sure the terminal connections are clean and tight. Coat the terminal connections lightly with dielectric red enamel after cleaning.

6.01 Safety Precautions 32
6.02 Pressure Relief Cap Check 32
6.03 Radiator Pressure-Flushing and Coolant Change 33
6.04 Fan Clutch Check (Noise Emission Control) 35
6.04.01 Fan Clutch Check (Noise Emission Control) 35
6.04.02 Horton DriveMaster® Fan Clutch 36

6. Engine Cooling/Radiator

6.01 Safety Precautions

Safety Precautions in this section apply to all procedures within this group.

DANGER:

When working on the vehicle, shut down the engine or motor, set the parking brake, and chock the tires. Before working under the vehicle, always place jack stands under the frame rails to ensure the vehicle cannot drop. Failure to follow these steps could result in serious personal injury or death.

6.02 Pressure Relief Cap Check

WARNING:

Do not remove or loosen the surge tank cap until the engine and cooling system have completely cooled. Use extreme care when removing the cap. A sudden release of pressure from removing the cap prior to the system cooling can result in a surge of scalding coolant that could cause serious personal injury.

1. Remove the surge tank filler cap first, to relieve the cooling system pressure, then remove the SAE cap; see Fig. 7,Surge Tank.

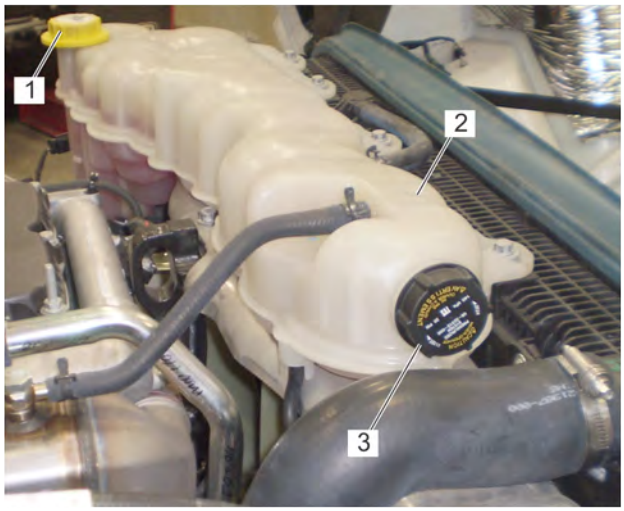

05/04/2016 f200865

Fig 7, Surge Tank

2. Using the Snap-On tool radiator-cap tester shown in Table.11,Snap-On Tool For Pressure Relief Cap Test check the pressure relief cap to see if it maintains pressure to within 10% of the pressure rating marked on the cap. If it does not, replace the cap. Make sure that the replacement cap is correctly rated for the cooling system of the vehicle. Use the recommended tool in Table.11,Snap-On Tool For Pressure Relief Cap Test.

Table 11, Snap-On Tool For Pressure Relief Cap Test

Tool	Part Number
Radiator-Cap Tester	TA53

Table 11, Snap-On Tool For Pressure Relief Cap Test

3. There is a second valve in the pressure relief cap that opens under vacuum. This prevents the collapse of hoses and other parts that are not internally supported when the system cools. Inspect the vacuum-relief valve to be sure it is not stuck.
4. Make sure that the filler cap seals properly on the coolant filler neck seat, and that the O-ring is not cracked or deteriorated. Replace the cap if the O-ring shows deterioration or damage.

6.03 Radiator Pressure-Flushing and Coolant Change

NOTE: For additional instructions on cleaning and flushing the engine cooling system, see the applicable engine manufacturer's maintenance and operation manual.

1. Apply the vehicle parking brake, then chock the tires. Tilt the hood.
2. Place a suitable container under the elbow of the radiator outlet pipe and the radiator. The container should hold at least 60 quarts (57 liters) of fluid.



WARNING:

Do not remove or loosen the surge tank cap until the engine and cooling system have completely cooled. Use extreme care when removing the cap. A sudden release of pressure from removing the cap prior to the system cooling can result in a surge of scalding coolant that could cause serious personal injury.

3. Remove the surge tank cap.
4. Remove the drain plugs from the radiator tank. Allow the coolant to drain.
5. Disconnect the radiator upper and lower hoses, and install the surge tank cap and the radiator tank drain plug. Attach the flushing gun nozzle to the radiator at the lower radiator hose opening. Run the water until the radiator is full.

CAUTION:
When flushing the radiator, do not apply more than 15 psi (100 kPa) air pressure. Excessive pressure can damage the radiator.

6. Gradually, apply up to 15 psi (103 kPa) air pressure to help dislodge sediment that has built up in the radiator core.
7. Shut off the air at the pressure gun nozzle and allow the radiator to refill with water.
8. Repeat the previous two steps until clean water flows from the radiator.
9. Remove the radiator drain plug and allow the radiator to drain. Install and tighten the drain plug after the radiator has been drained. Do not overtighten.
10. Connect the hoses. The hose clamps can be either T-bolt clamps, shown in Fig.8,T-Bolt Type Hose Clamp or Breeze Constant-Torque clamps, shown in Fig.9,Breeze Constant-Torque Hose Clamp InstallationWhen working with T-bolt hose clamps, tighten the clamps 55 lbf·in (621 N·cm). These clamps are now standard on hoses with an in diameter greater than 2 inches (51 mm). When installing Breeze Constant-Torque hose clamps, the clamps must be tightened to the correct torque. The screw tip of the clamp must extend about 1/4 inch (6 mm) from the clamp housing, and the Belleville washer stacks must be collapsed almost flat. Use a torque wrench to install these clamps correctly. The correct installation torque is as follows: **For Breeze Constant-Torque clamps with a 5/16-inch tightening screw hex:** 55 lbf·in (621 N·cm). **For Breeze Constant-Torque clamps with a 3/8-inch tightening screw hex:** 90 lbf·in (1017 N·cm).

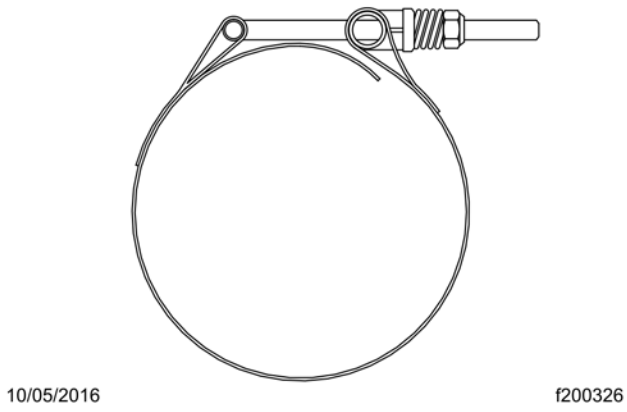

Fig 8, T-Bolt Type Hose Clamp

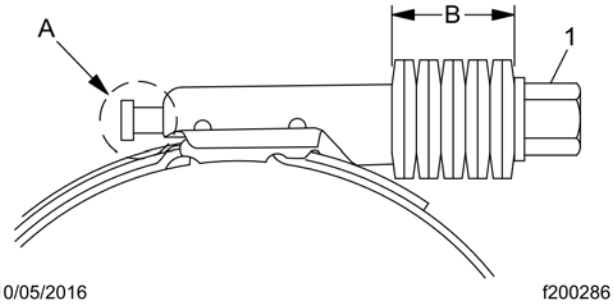

A. The screw tip must extend about 1/4 inch (6 mm).
B. Belleville washers must collapse almost flat.
1. Tightening Screw Hex

Fig 9, Breeze Constant-Torque Hose Clamp Installation

NOTE: **NOTE:** All hose clamps will lose torque after installation due to "compression set." However, when correctly installed, Breeze Constant-Torque clamps will hold enough torque to automatically adjust and keep consistent sealing pressure. During vehicle operation and shutdown, the screw tip may adjust according to temperature and pressure changes. The torque may need to be adjusted for individual applications.

11. Place a pan under the coolant filter to catch engine coolant.
12. Remove the coolant filter with a strap or chain wrench. Install a new coolant filter and tighten.
13. Fill the cooling system with new coolant. The cooling system is filled when the coolant level reaches the MAX line on the surge tank. Refer to the engine manufacturer's service literature for specific coolant information.
14. Replace the surge tank cap(s).
15. Return the hood to the operating position.
16. Start the engine and turn on the cab heater. Allow the engine to warm up to normal operating temperature. Check the radiator and hoses for leaks. Repair as needed.
17. Shut off the engine, then check the coolant level in the surge tank. Add coolant if the level isn't at the MAX line on the surge tank.

6.04 Fan Clutch Check (Noise Emission Control)

6.04.01 Fan Clutch Check (Noise Emission Control)

Radiator Fan

1. Confirm the engine-driven radiator fan is not improperly running at full engagement. Some factors that could cause a correctly functioning fan to engage are listed below. Make sure none of these affect the inspection.
    1.a Low air system pressure.
    1.b Air conditioning requested (main or auxiliary systems).
    1.c Engine coolant is above the fan switch point at 212°F (100°C).
    1.d Power take off (PTO) or other auxiliary systems are engaged.

NOTE: If the radiator fan is not cycling off, or if the shroud is missing or incomplete, the vehicle may be out of compliance with federal noise emissions.

2. Shut down the engine and inspect the fan shroud for damage.
3. Note the results and date on the inspection log.

6.04.02 Horton DriveMaster® Fan Clutch

NOTE: If any part of the fan clutch needs to be repaired or replaced after performing the checks below, see of the **57X Workshop Manual**

1. Disconnect the batteries at the negative terminals.
.
2. Inspect the electrical connections and wires to the fan clutch solenoid; see Fig. 10,Horton DriveMaster Air Solenoid Valve Secure the connection if loose; replace wires and connectors if damaged.

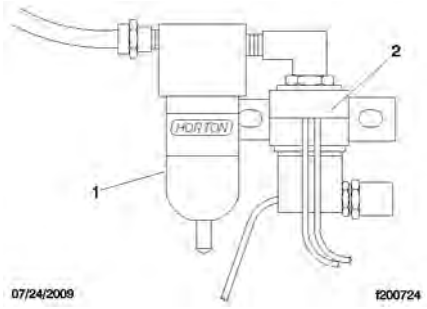

Fig 10, Horton DriveMaster Air Solenoid Valve

3. Clean the fan clutch air solenoid valve filter, if equipped, as follows.
   - 3.a Unscrew the fan clutch solenoid valve air filter assembly and remove the filter element; see Fig. 11,Horton DriveMaster Solenoid Valve Air Filter
   - 3.b Clean the filter element with cleaning solvent.
   - 3.c Using a clean, lint-free cloth, wipe off any excess solvent.
   - 3.d Reassemble the clutch valve solenoid air filter, then install it on the vehicle.

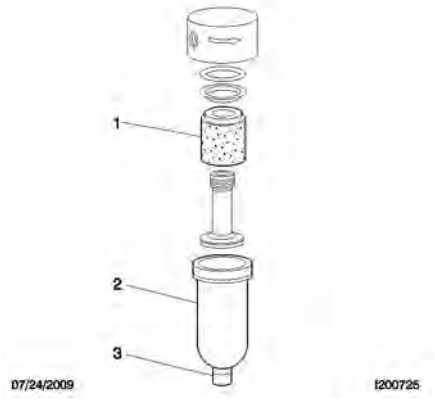

Fig 11, Horton DriveMaster Solenoid Valve Air Filter

4. Check the fan for bent, cracked, or damaged blades. Replace if damaged. Check for adequate clearance between the fan and other components.
5. Check the fan belt for wear, tension, and alignment. Correct if necessary.
6. Check for wear on the friction facing. Replace the friction facing if it is worn to a 3/16-inch (4.8-mm) thickness or less. Also check the facing for signs of oil contamination or burn marks. If evidence of oil or burn marks are found, replace the friction facing.
7. Connect the battery cables. Start the engine, and charge the air system to 120 psi (827 kPa). Manually engage and disengage the fan clutch. Check the fan and fan clutch from a distance. Look for vibration, fan blade contact, fan clutch slippage, and overall fan clutch operation. If the fan clutch does not operate correctly, see of the **57X Workshop Manual** for troubleshooting and repair procedures.
8. With the air system charged to 120 psi (827 kPa), check the fan clutch for audible air leaks, using a suitable listening device. Check at the solenoid valve, the air filter assembly, and the air hoses and fittings. See Fig. 12,Checking for Air Leaks (Horton DriveMaster) Using a wet finger or a soapy water solution, check for a leak in the same areas.

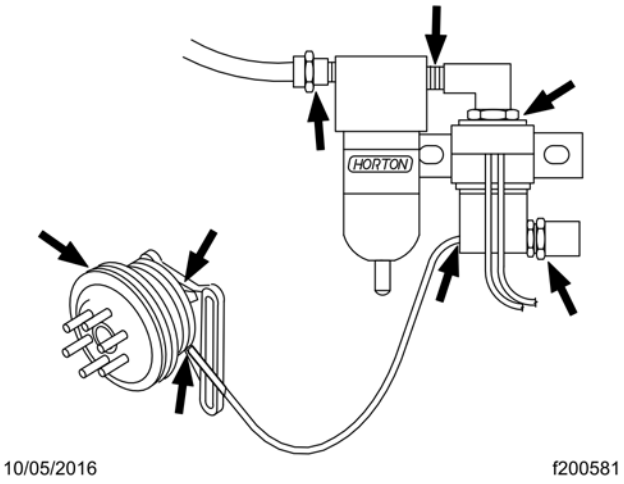

Fig 12, Checking for Air Leaks (Horton DriveMaster)

9. If a leak is detected, remove the fan blade. Install a new seal kit. See of the **57X Workshop Manual** for repair procedures.

NOTE: The fan clutch may slip if the air supply pressure is below 70 psi (483 kPa) or if there is a leak inside the fan clutch. Any leak must be remedied.

10. Check the fan drive for discoloration or any other signs of slipping or overheating.
11. Check the fan clutch bearings as follows.
    - 11.a Turn the fan in both directions and feel for worn hub bearings.
    - 11.b If possible, remove the drive belt and check for worn sheave bearings by turning the sheave in both directions.
    - 11.c If either the hub or sheave bearings are worn, replace them, using a Horton DriveMaster Super Kit; see of the **57X Workshop Manual**.

7.01 Safety Precautions 40
7.02 Lubrication of the Clutch Release Bearing 40
7.03 Fluid Change, Hydraulic Clutch Control 41
7.03.01 General information 41
7.03.02 Pressure Bleeding 41
7.03.03 Manual Bleeding 43

7. Clutch

7.01 Safety Precautions

Safety Precautions in this section apply to all procedures within this group.

DANGER:

death.
When working on the vehicle, shut down the engine or motor, set the parking brake, and chock the tires. Before working under the vehicle, always place jack stands under the frame rails to ensure the vehicle cannot drop. Failure to follow these steps could result in serious personal injury or

7.02 Lubrication of the Clutch Release Bearing

The standard clutch release bearing is not sealed, and requires lubrication. Lubricate the bearing, as follows.

NOTE: On vehicles equipped with Detroit transmissions, the release bearing does not need to be lubricated.

NOTE: On vehicles equipped with Eaton Fuller UltraShift PLUS transmissions, lubricate the release bearing every 50,000 miles (80 450 km) or three months.

1. Park the vehicle on a level surface, shut down the engine, and set the parking brake. Chock the tires.
2. Remove the clutch inspection plate to see the release bearing while lubricating it. See Fig. 13,Typical Clutch Inspection Plate

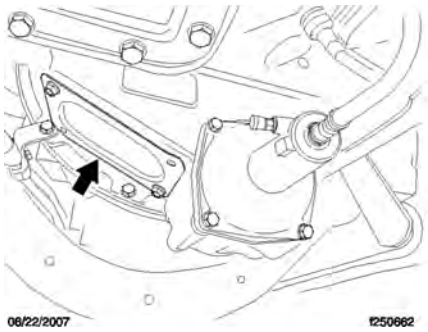

Fig 13, Typical Clutch Inspection Plate

3. Clean the grease fitting. On some vehicles, a lube tube will be used and the fitting may be at the 9-o'clock position on the left side of the bellhousing. See Fig.14,Typical Release Bearing Grease Fitting.

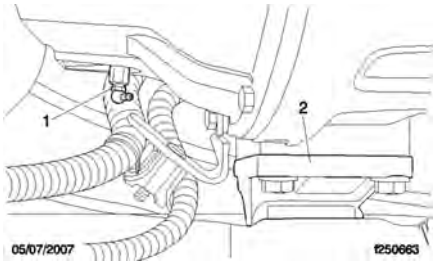

Fig 14, Typical Release Bearing Grease Fitting

NOTICE:
Do not over-lubricate the clutch release bearing. Over-lubrication could contaminate the clutch internally, causing clutch slippage and premature failure. Do not use chassis grease or multipurpose lubricants.

4. Using a pressure-type grease gun, lubricate the release bearing with NLGI Grade 3 grease until excess grease purges from the rear of the release bearing (toward the transmission).
5. Wipe excess purged grease from the bearing.
6. Install the clutch inspection plate.

7.03 Fluid Change, Hydraulic Clutch Control

7.03.01 General information

Replace the hydraulic clutch control fluid to ensure clutch function is reliable and correct. It can be changed by pressure bleeding or manual bleeding. Pressure bleeding can be done by one person and manual bleeding requires two.

WARNING:
Hydraulic clutch control fluid (DOT 4 brake fluid) is hazardous. It may be a skin irritant and can cause blindness if it gets in your eyes. Always wear safety glasses when handling it or bleeding hydraulic lines. If you get it on your skin, wash it off as soon as possible.

NOTICE:
Do not spill hydraulic clutch control fluid on the cab paint. Clean it off immediately if any is spilled. Brake fluid can damage paint.

7.03.02 Pressure Bleeding

IMPORTANT: The pressure line must slope continuously downward between the primary and secondary cylinders. On some vehicles, the securing clamps may need to be removed to achieve this and allow the air to be purged.

NOTE: A bleeder system (J-29532) and a bleed adaptor (J-35798) for the fluid reservoir are available through SPX Kent-Moore Tools and may be used to complete the following procedure. To order these parts, call Kent-Moore at 1-800-328-6657.

1. Park the vehicle on a level surface, shut down the engine, and set the parking brake. Chock the tires and raise the hood.
2. Prepare the pressure bleeding equipment according to the manufacturer's instructions. Use new DOT 4 brake fluid from a tightly sealed container. Pressurize the bleeder system to 15 psi (103 kPa).
3. Remove the reservoir lid and install the pressure bleed adaptor on the reservoir. See Fig. 15,Reservoir, Hydraulic Clutch Control

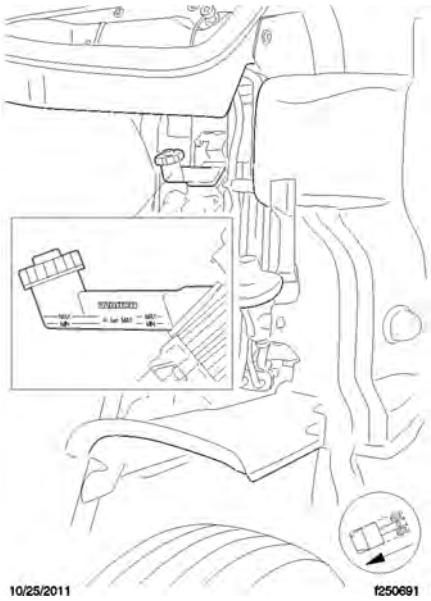

Fig 15, Reservoir, Hydraulic Clutch Control

4. Bleed the hydraulic system as follows.
   - 4.a Open the bleed valve on the bleed tank to pressurize the reservoir.
   - 4.b Remove the cap from the bleed valve of the secondary cylinder. See Fig. 16,Secondary Cylinder, Hydraulic Clutch Control On the valve, install a transparent drain hose connected to a catch bottle. The hose needs to fit the bleed valve tight enough so it does not fall off when fluid is pumped out.
   - 4.c Open the bleed valve on the secondary cylinder.
   - 4.d When the draining fluid is clear and free of air bubbles, close the bleed valve.

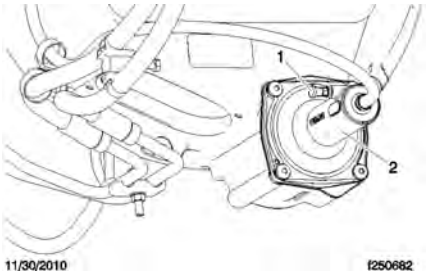

Fig 16, Secondary Cylinder, Hydraulic Clutch Control

5. Check the fluid level in the reservoir. If necessary, add or drain fluid to bring the fluid level to between the MIN and MAX lines marked on the side of the reservoir.
6. Install the reservoir lid.
7. Disconnect the transparent hose. Tighten the bleed screw 88 lbf·in (994 N·cm) and install the cap on the secondary cylinder bleed valve.
8. Depress the clutch pedal a few times. There should be resistance over the full pedal stroke.

7.03.03 Manual Bleeding

1. Park the vehicle on a level surface, shut down the engine, and set the parking brake. Chock the tires and open the hood.

   NOTE: The hydraulic system holds approximately 0.5 quart (0.5 liter) of fluid. It may need to be refilled during the bleeding process to prevent air from re-entering the system.

2. Remove the reservoir lid and fill the reservoir with new DOT 4 brake fluid from a tightly sealed container. See Fig. 17,Reservoir, Hydraulic Clutch Control

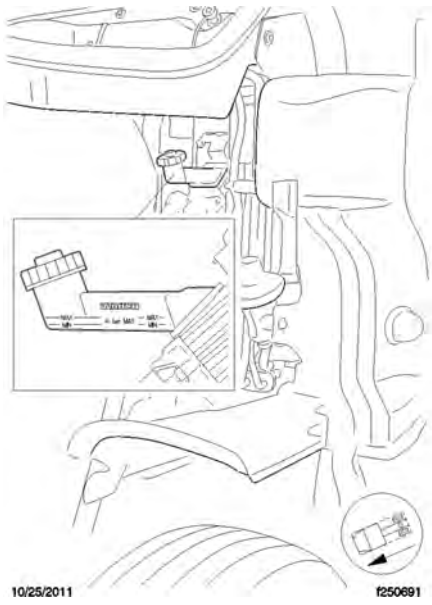

Fig 17, Reservoir, Hydraulic Clutch Control

3. Remove the cap from the bleed valve of the secondary cylinder. See Fig. 18,Secondary Cylinder, Hydraulic Clutch Control On the valve, install a transparent drain hose connected to a catch bottle. The hose needs to fit the bleed valve tight enough so it does not fall off when fluid is pumped out.

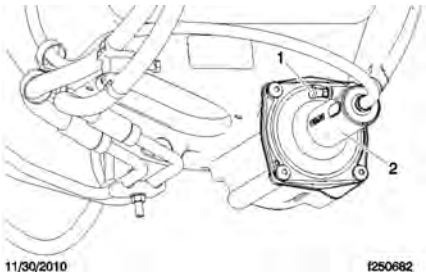

Fig 18, Secondary Cylinder, Hydraulic Clutch Control

NOTE: The following steps require two people—one in the cab to work the clutch pedal, and one to open and close the bleed valve and watch the fluid.

4. Bleed the system, as follows.
   - 4.a Open the bleed valve.
   - 4.b Depress the clutch pedal until it stops.
   - 4.c Close the bleed valve.
   - 4.d Return the pedal to the upper position.
   - 4.e Repeat the previous steps until the fluid is clear and free of air bubbles.
   - 4.f Depress the clutch pedal. There should be resistance over the full pedal stroke.
5. Check the fluid level in the reservoir. If necessary, add or drain fluid to bring the fluid level to between the MIN and MAX lines marked on the side of the reservoir. Install the reservoir lid.
6. Disconnect the transparent hose. Tighten the bleed valve 88 lbf·in (994 N·cm) and install the cap on the secondary cylinder bleed valve.

8.01 Safety Precautions 46
8.02 Detroit® Automated Transmission Fluid Change and Magnetic Plug Cleaning 46
8.03 Checking With the Sight Glass 47
8.04 Detroit® Automated Transmission Fluid Level Inspection 48
8.05 Eaton Fuller Transmission Fluid Change and Magnetic Plug Cleaning 49
8.06 Eaton Fuller Transmission Fluid Level Inspection 52
8.06.01 General information 52
8.06.02 Checking at the Fill Plug 52
8.06.03 Checking With the Sight Glass 53
8.07 Eaton Fuller Manual Transmission Air Filter/Regulator Check, Cleaning, or Replacement 54

8. Transmission

8.01 Safety Precautions

Safety Precautions in this section apply to all procedures within this group.

DANGER:

When working on the vehicle, shut down the engine or motor, set the parking brake, and chock the tires. Before working under the vehicle, always place jack stands under the frame rails to ensure the vehicle cannot drop. Failure to follow these steps could result in serious personal injury or death.

8.02 Detroit® Automated Transmission Fluid Change and Magnetic Plug Cleaning

IMPORTANT: Drain the transmission when the fluid is warm. If not already warm, run the engine until the transmission fluid reaches operating temperature. Shift the transmission to neutral (N) and shut down the engine.

NOTICE:

Operating a transmission with the fluid level higher or lower than recommended can result in transmission damage. Do not overfill the transmission. Overfilling will force fluid out of the case through the main shaft openings.

Do not mix types or brands of fluid, because of possible incompatibility. Do not use fluid additives, friction modifiers, or extreme-pressure gear fluids.

1. Apply the parking brakes, and chock the rear tires. Place a large drain pan under the transmission.
2. Clean the area around the fill plug, then remove it from the side of the gear case. Remove the drain plug from the bottom of the case. See Fig.19,Drain and Fill Plugs, Detroit Automated Transmissions.



Fig 19, Drain and Fill Plugs, Detroit Automated Transmissions

3. Clean the fill plug and the drain plug.
4. Install a new seal on the drain plug, then install the plug and tighten it 45 lbf·ft (61 N·m).

NOTICE:

Detroit transmissions use synthetic lubricant that meets specific requirements. To see a list of approved lubricants and information to identify which transmissions they can be used with, see the Transmission Fluid Service Information brochure athttp://dtna.info/DT12FluidsManual.

5. Add fluid until it is level with the lower edge of the fill opening; see Fig.20,Checking Transmission Fluid Level See the Detroit Transmission Fluid Service Information brochure at http://dtna.info/DT12FluidsManual, for identifying the transmission type, estimated transmission fluid capacities, and applicable fluid specifications.

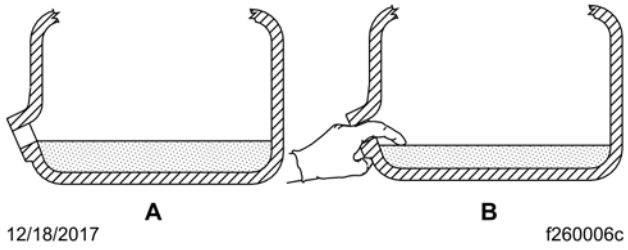

Fig 20, Checking Transmission Fluid Level

NOTE: In all cases, the correct fluid level is established by checking at the fill opening.

6. Operate the engine for five minutes after filling the transmission, then check the fluid level again.
7. Install a new seal on the fill plug, then install the plug and tighten it 45 lbf·ft (61 N·m).
8. Operate the vehicle to check for correct operation.

8.03 Checking With the Sight Glass

If the transmission is equipped with a sight glass, check the fluid level as follows:

1. Clean the oil level sight glass. See Fig.21,Eaton Fuller Transmission With a Sight Glass

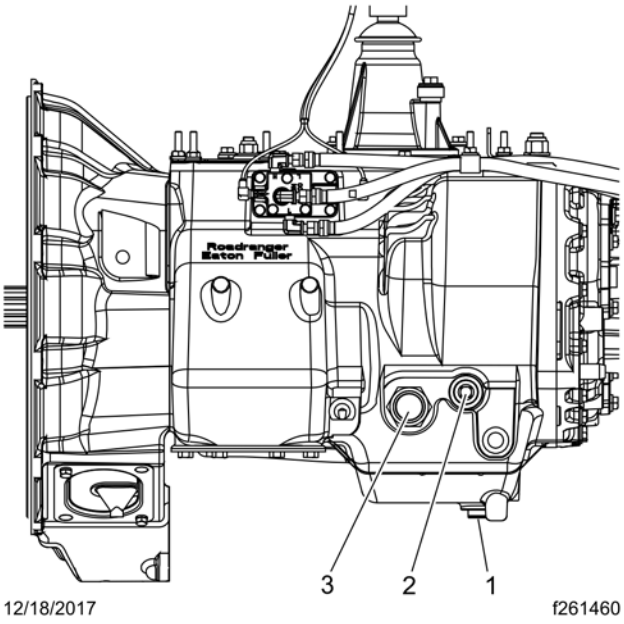

Fig 21, Eaton Fuller Transmission With a Sight Glass

2. Check the fluid level in the sight glass. When the fluid level is at or above 3/4 of the sight glass, then it is at or above the minimum fill level. See Fig.22,Transmission Fluid Level Sight Glass

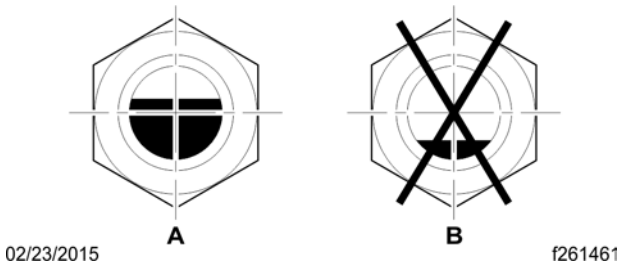

Fig 22, Transmission Fluid Level Sight Glass

3. If the fluid level is low, check the transmission for leaks, and correct as needed.
4. If needed, add the recommended fluid, until it is at or above 3/4 of the sight glass. See Table.for approved transmission lubricants.

8.04 Detroit® Automated Transmission Fluid Level Inspection

NOTICE:

Operating a transmission with the fluid level higher or lower than recommended can result in transmission damage. Do not overfill the transmission. Overfilling will force fluid out of the case through the main shaft openings.

Do not mix types or brands of fluid because of possible incompatibility. Do not use fluid additives, friction modifiers, or extreme-pressure gear fluids.

With the transmission at operating temperature, and the vehicle on a level surface, check the fluid level in the transmission.

1. Clean the area around the fill plug, then remove it from the side of the gear case.
2. Using your finger or a bent pipe cleaner, see if the fluid is level with the fill opening. See Fig. 23,Checking Transmission Fluid Level

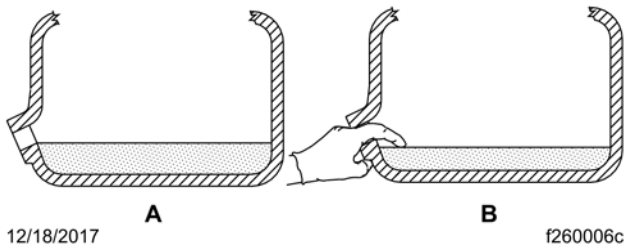

Fig 23, Checking Transmission Fluid Level

3. If the fluid level is low, check the transmission for leaks, and correct as needed.

NOTICE:

Detroit transmissions use synthetic lubricant that meets specific requirements. To see a list of approved lubricants and information to identify which transmissions they can be used with, see the Transmission Fluid Service Information brochure athttp://dtna.info/DT12FluidsManual.

4. If needed, add the recommended fluid until it is level with the lower edge of the fill opening. See the Transmission Fluid Service Information brochure at http://dtna.info/DT12FluidsManual for approved transmission lubricants.
5. Clean the fill plug and install a new seal on it. Install the plug in the side of the gear case, then tighten it 45 lbf·ft (61 N·m).

8.05 Eaton Fuller Transmission Fluid Change and Magnetic Plug Cleaning

NOTE: Information in this MOP applies to Eaton Fuller manual and automated transmissions. Fluid change intervals are extended to 500,000 miles (804 500 km) on any vehicles filled with synthetic transmission fluid.

NOTICE:

Operating a transmission with the fluid level higher or lower than recommended can result in transmission damage. Do not overfill the transmission. Overfilling will force fluid out of the case through the main shaft openings.

Do not mix types or brands of fluid, because of possible incompatibility. Do not use fluid additives, friction modifiers, extreme-pressure gear fluids, or multiviscosity lubricants.

IMPORTANT: Drain the transmission when the fluid is warm. If not already warm, run the engine until the transmission fluid reaches operating temperature. Shift the transmission to neutral (N) and shut down the engine.

1. Apply the parking brakes, and chock the rear tires. Place a large drain pan under the transmission.
2. Clean the area around the fill plug, and remove it from the side of the gear case. Remove each drain plug from the bottom of the case.
3. Clean the fill and drain plugs. For magnetic plugs, use a piece of key stock or any other convenient steel slug to short the two magnetic poles and divert the magnetic field.
4. Install each drain plug and tighten them 50 lbf·ft (68 N·m).

IMPORTANT: For an Eaton Fuller transmission, the optional transmission fluid filter is a remote-mount, spin-on type, and is located between the transmission and the fluid cooler. The filter bracket is attached to the frame rail or some other nearby location. The filter is mounted in a vertical position, and should be filled with fluid before installation to assure the proper fluid level. For optimum transmission performance, change the filter each time that the fluid is changed.

5. For an Eaton Fuller transmission equipped with a transmission fluid filter(s), replace the fluid filter(s) as follows:
   5.a Place a drain pan under the transmission fluid filter.

CAUTION:
To prevent skin burns from hot transmission fluid, wear protective gloves when removing the filter.

   5.b Place a strap or chain wrench around the filter canister, and rotate it in a counterclockwise motion to separate the filter from the mounting. Carefully spin the filter off the mount and remove it from the vehicle.
   5.c Place a strap or chain wrench around the filter canister, and rotate it in a counterclockwise motion to separate the filter from the mounting. Carefully spin the filter off the mount and remove it from the vehicle.
   5.d Apply a light coat of transmission fluid to the O-ring gasket on the new filter. Fill the filter with specified transmission fluid, and spin the filter onto the mount.

   NOTE: The filter fills slowly, so be patient to ensure the proper fluid level has been set.

   5.e Once the filter makes contact with the mount, use a strap wrench to rotate the canister an additional 180 to 270 degrees to firmly tighten the filter. Wipe the filter clean of any fluid after it is tightened.
6. Add fluid until it is level with the lower edge of the fill opening. See Fig. If the transmission has two fill openings, add fluid to the level of both openings. See Table.12,Approved Manual Transmission Lubricants for approved transmission lubricants, and See Table.13,Eaton Fuller Transmission Lubricant Capacities for transmission lubricant capacities. For more information and a complete listing of Eaton approved lubricants, refer to the Eaton website, www.roadranger.com .

Table 12, Approved Manual Transmission Lubricants

Approved Manual Transmission Lubricants			
Transmission Model	**Lubricant Type**	**Temp. Range**	**SAE Viscosity**
All Eaton Fuller	MobilTrans SHC 50 (RN 2952 E-5)	All	50W
	Synthetic transmission lubricant approved by Eaton	All	50W

1. Do not mix types or brands of fluid. Multi-weight and extreme-pressure gear fluids are not recommended.

Table 12, Approved Manual Transmission Lubricants

Table 13, Eaton Fuller Transmission Lubricant Capacities

Eaton Fuller Transmission Lubricant Capacities	
Transmission Model	**Refill Capacity: qt (L)**
7-Speed T Series	
All Models	18.0 (17.0)
All 9-Speed Series	
All Models	13.5 (12.8)
All 10-Speed Manual (except deep reduction)	
FR and FRO Series	11.75 (11.0)
RT and RTX Series	13.0 (12.3)
RTLO Series	14.0 (13.2)
10-Speed Deep Reduction	
RTO–14908LL	14.0 (13.2)
RTO–16908LL	
10-Speed Advantage	
FA Series	8.0 (7.5)
10-Speed Automated	
Lightning Top 2 (all)	13.5 (12.8)
10-Speed Autoshift AS2 (all)	13.0 (12.3)
13-Speed RTLO Series	
All Models	14.0 (13.2)

15-Speed RTO Series	
All Models	14.0 (13.2)
All 18-Speed Series	
RTLO Series	14.0 (13.2)
18-Speed Autoshift AS2 (all)	
UltraShift PLUS	
LAS	13.0 (12.0)
MHP and MXP	14.0 (13.0)

Table 13, Eaton Fuller Transmission Lubricant Capacities

NOTE: In all cases, the correct fluid level is established by checking at the fill opening.

7. Operate the engine for five minutes after filling the transmission, then check the fluid level again.
8. Clean the fill plug, then install it in the transmission. Tighten the plug as follows:
   - For an Eaton Fuller transmission with a plug with 3/4-inch pipe threads, tighten the plug 25 to 35 lbf·ft (34 to 47 N·m).
   - For an Eaton Fuller transmission with a plug with 1-1/4-inch pipe threads, tighten the plug 60 to 75 lbf·ft (81 to 102 N·m).
9. Operate the vehicle to check for correct operation.

8.06 Eaton Fuller Transmission Fluid Level Inspection

8.06.01 General information

NOTICE:

With the transmission at operating temperature, and the vehicle on a level surface, check the fluid level in the transmission.

Some transmissions are equipped with a sight glass for checking the fluid level. For transmissions not so equipped, check the fluid level at the fill plug.

Operating a transmission with the fluid level higher or lower than recommended can result in transmission damage. Do not overfill the transmission. Overfilling will force fluid out of the case through the main shaft openings.

Do not mix types or brands of fluid, because of possible incompatibility. Do not use fluid additives, friction modifiers, extreme-pressure gear fluids, or multiviscosity lubricants.

8.06.02 Checking at the Fill Plug

1. Clean the area around the fill plug, and remove it from the side of the gear case.
2. Using your finger or a bent pipe cleaner, see if the fluid is level with the fill opening. See Fig. 24,Checking Transmission Fluid Level.

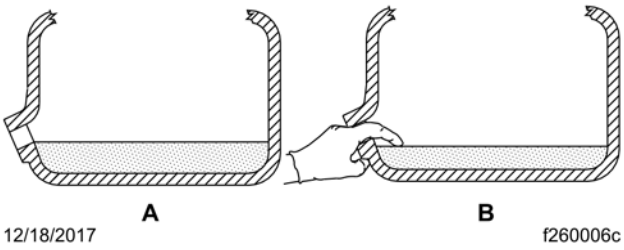

Fig 24, Checking Transmission Fluid Level

3. If the fluid level is low, check the transmission for leaks, and correct as needed.
4. If needed, add the recommended fluid, until it is level with the lower edge of the fill opening. See Table.for approved transmission lubricants.
5. Clean the fill plug, then install it. Tighten the plug as follows:
   - For an Eaton Fuller transmission with a plug with 3/4-inch pipe threads, tighten the plug 25 to 35 lbf·ft (34 to 47 N·m).
   - For an Eaton Fuller transmission with a plug with 1-1/4-inch pipe threads, tighten the plug 60 to 75 lbf·ft (81 to 102 N·m).

8.06.03 Checking With the Sight Glass

If the transmission is equipped with a sight glass, check the fluid level as follows:

1. Clean the oil level sight glass. See Fig.25,Eaton Fuller Transmission With a Sight Glass

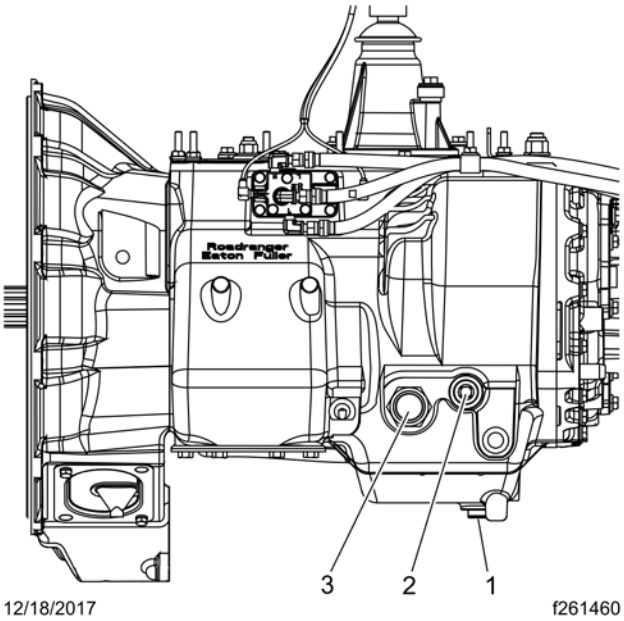

Fig 25, Eaton Fuller Transmission With a Sight Glass

2. Check the fluid level in the sight glass. When the fluid level is at or above 3/4 of the sight glass, then it is at or above the minimum fill level. See Fig.26,Transmission Fluid Level Sight Glass

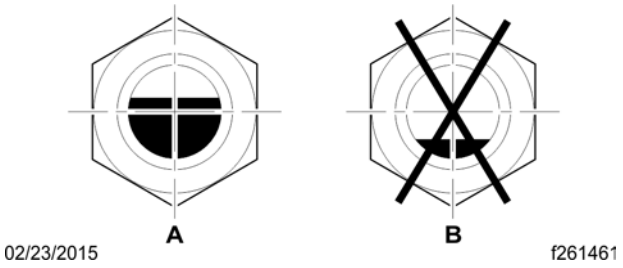

Fig 26, Transmission Fluid Level Sight Glass

3. If the fluid level is low, check the transmission for leaks, and correct as needed.
4. If needed, add the recommended fluid, until it is at or above 3/4 of the sight glass. See Table.for approved transmission lubricants.

8.07 Eaton Fuller Manual Transmission Air Filter/Regulator Check, Cleaning, or Replacement

1. Apply the parking brakes, and chock the rear tires. Drain the air reservoirs.

WARNING:
Drain the air supply; if the air supply is not drained before the air filter/regulator is serviced, serious injury and component damage could result.

2. Clean the outside of the air filter/regulator with cleaning solvent. See Fig.27,Air Filter/Regulator Location

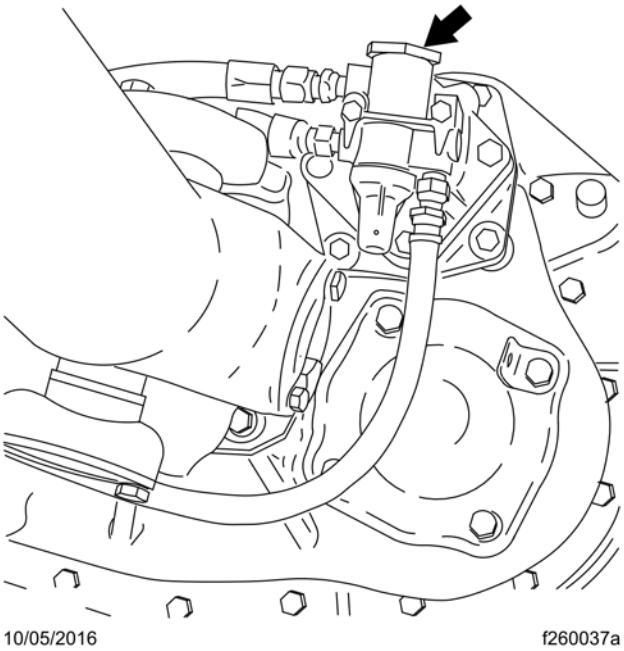

Fig 27, Air Filter/Regulator Location

3. Remove the end cap, large O-ring, and filter element from the filter housing. See Fig. 28,Eaton Fuller Transmission Air Filter/Regulator Remove the small O-ring from the end cap.

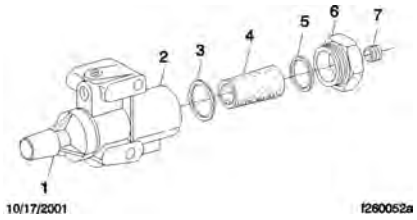

Fig 28, Eaton Fuller Transmission Air Filter/Regulator



WARNING:
Wear safety goggles when using compressed air to clean parts, as permanent harm to eyes could result from flying debris.

NOTE: Do not remove, disassemble, or adjust the air regulator. If the air regulator is not keeping air pressure between 58 and 63 psi (400 and 434 kPa), replace the air filter/regulator. It cannot be repaired.

4. Clean the filter element by dipping it in alcohol or other cleaning solvent. Blow compressed air through the element (inside to outside) to loosen surface dirt and to dry the element. If it is not damaged, the sintered metallic filter element will last the life of the vehicle. Wipe out the filter housing with a clean, dry, lint-free rag. Clean and inspect the O-rings and end cap. Replace any parts that are damaged.
5. Install the large O-ring, then the filter element (small end first) into the filter housing.
6. Install the small O-ring in the end cap, then install the end cap and tighten it until firm.



CAUTION:
A leaking air filter or air lines can cause slow or hard shifting of the transmission, and eventual transmission damage.

7. Start the engine, and build pressure in the air system. Check for air leaks at the filter housing and air line connections; repair any leaks.

9.01 Safety Precautions 58
9.02 Fifth Wheel Inspection 58
9.02.01 General information 58
9.02.02 Holland FW35 58
9.02.03 Fontaine 59
9.02.04 Jost 60
9.03 Fifth Wheel Lubrication 62
9.03.01 General information 62
9.03.02 Fontaine 63
9.03.03 Holland FW35 64
9.03.04 Jost 65
9.04 Frame Fastener Torque Check 66

9. Frame and Frame Components

9.01 Safety Precautions

Safety Precautions in this section apply to all procedures within this group.

DANGER:

When working on the vehicle, shut down the engine or motor, set the parking brake, and chock the tires. Before working under the vehicle, always place jack stands under the frame rails to ensure the vehicle cannot drop. Failure to follow these steps could result in serious personal injury or death.

9.02 Fifth Wheel Inspection

9.02.01 General information

WARNING:

All fifth wheel maintenance, adjustment, and rebuilding must be done only by a qualified mechanic. Improper or incomplete procedures could result in a possible disengagement of the trailer from the tractor, which could result in personal injury or property damage.

Parts are under spring compression. Wear safety goggles while servicing the fifth wheel. Failure to do so can result in personal injury, due to parts ejecting with force.

WARNING:

All fifth wheel maintenance, adjustment, and rebuilding must be done only by a qualified mechanic. Improper or incomplete procedures could result in a possible disengagement of the trailer from the tractor, which could result in personal injury or property damage.

Parts are under spring compression. Wear safety goggles while servicing the fifth wheel. Failure to do so can result in personal injury, due to parts ejecting with force.

9.02.02 Holland FW35

1. Disconnect the tractor from the trailer. For instructions, see the vehicle driver's manual.
2. Thoroughly steam clean all fifth wheel components before inspection.
3. Check for cracks in the fifth wheel assembly, mounting brackets, and mounting parts.
4. Check the fastener torques on the fifth wheel assembly and fifth wheel mounting. Tighten bolts and nuts as needed. Replace missing or damaged bolts.
5. Inspect the fifth wheel for bent, worn, damaged, and missing parts; replace them as needed with genuine Holland parts.
6. Using a Holland Kingpin Lock Tester (Holland tool number TF-TLN-5001, available through the PDCs as HLD TFTLN5001), check the operation of the locking mechanism by opening and closing the locks. See Fig. 29,Holland Fifth Wheel Properly Closed

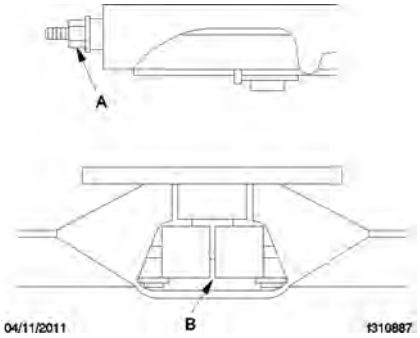

A. The nut and washer should be snug against the fifth wheel.

B. The locks should be completely closed around the kingpin.

Fig 29, Holland Fifth Wheel Properly Closed

7. After inspecting the fifth wheel, lubricate all moving parts with a chassis or multipurpose grease. See **MOP 31–02** in this manual for lubrication instructions.

9.02.03 Fontaine

1. Disconnect the tractor from the trailer. For instructions, see the vehicle driver's manual.
2. Thoroughly steam clean the fifth wheel.
3. Check for cracks in the fifth wheel assembly, mounting brackets, and mounting parts.
4. Ensure that both bracket pins are in place and secured by retainer pins and cotter pins. See Fig. 30,Fontaine Fifth Wheel

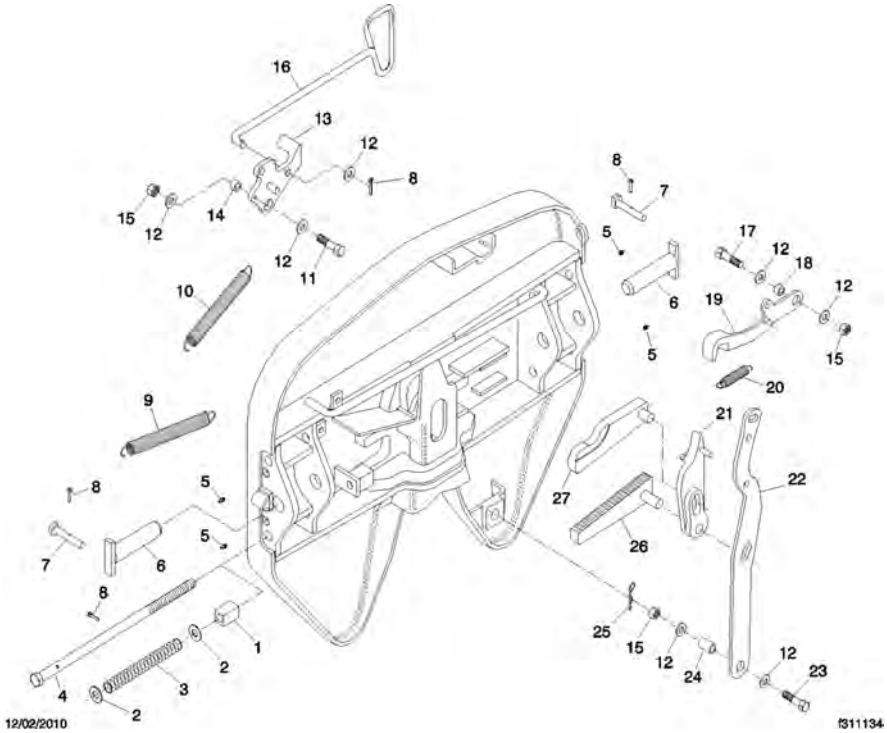

6000 Series shown; 7000 Series fifth wheels use similar parts.

Fig 30, Fontaine Fifth Wheel

6000 Series shown; 7000 Series fifth wheels use similar parts.

5. For fifth wheels equipped with bracket liners, rock the fifth wheel. If it does not rock freely, remove the top plate and inspect the bracket liners. Replace liners that are broken or less than 0.125 inch (3 mm) thick at the top of the liners. For the liner replacement procedure, see the Fontaine website, www.fifthwheel.com .
6. Check the jaw and stationary jaw for mushrooming, and check that the serrations at the jaw and wedge are in good condition.
7. Test the secondary safety lock latch for ease of operation.
8. Check for loose nuts or bolts on the fifth wheel and the mounting. Set a torque wrench to the maximum torque value for the bolt being checked, and confirm that the torque is to specification. Do not loosen the bolt to check the torque. For torque specifications, see of the vehicle Workshop Manual.
9. Check all springs to see if they are securely fastened, and are not deformed.

WARNING:
Do not disassemble the fifth wheel to inspect the springs. The springs are under extreme pressure, and could cause serious injury.

10. Check the wedge adjustment.
    - 10.a Close the fifth wheel on a standard 2-inch (51-mm) kingpin or similar 2-inch (51-mm) diameter shaft so that it locks.
    - 10.b Push on the wedge stop rod with hand pressure. It should move in 1/4 inch (6 mm) and spring back out on release. If the free travel is not 1/4 inch (6 mm), adjust the distance to 1/4 inch (6 mm) by turning the wedge stop rod, on the right side of the top plate, clockwise to reduce the gap and counter-clockwise to increase it.
11. Replace cracked, worn, or damaged parts with new parts. Replace all loose mounting bolts with 5/8–11 SAE grade 8 bolts, grade C locknuts, and hardened washers. *Do not* reuse bolts, nuts, and washers on fifth wheel mountings.
12. After inspecting the fifth wheel, lubricate all moving parts with a chassis or multipurpose grease. Apply a generous coating of grease to the top plate to fill the grooves, or depressions, on the top plate. See **MOP 31–02** in this manual for lubrication instructions.

9.02.04 Jost

1. Disconnect the tractor from the trailer. For instructions, see the vehicle driver's manual.
2. Thoroughly steam clean the fifth wheel.
3. Check the mounting for missing or damaged fasteners, and broken components. Replace or repair as needed.
4. Inspect the bracket pin bolts. Make sure the locking tabs are properly securing the bolts in place. See Fig. 31,Bracket Pin Bolt Locking Tabs



Fig 31, Bracket Pin Bolt Locking Tabs

5. Check the fifth wheel for bent, worn, or broken parts. Replace as needed.
6. If the fifth wheel is equipped with low-lube plates, check the plates and replace if damaged or worn down to the securing bolts. It is normal for outside edges of the plate to pucker slightly; this does not affect performance.
7. Check the fifth wheel adjustment. Using a lock tester, lock and unlock the fifth wheel several times. Make sure that the locking mechanism works properly. *The lock is properly adjusted if:* the wheel locks and unlocks easily each time and the lock tester rotates freely. *The lock is too loose if:* you feel front/rear play when pulling and pushing on the lock tester handle. See Fig.32,Jost Fifth Wheel Adjustment ref. A.*The lock is too tight if:* the lock tester does not rotate freely in the lock. See Fig.32,Jost Fifth Wheel Adjustment ref. B.

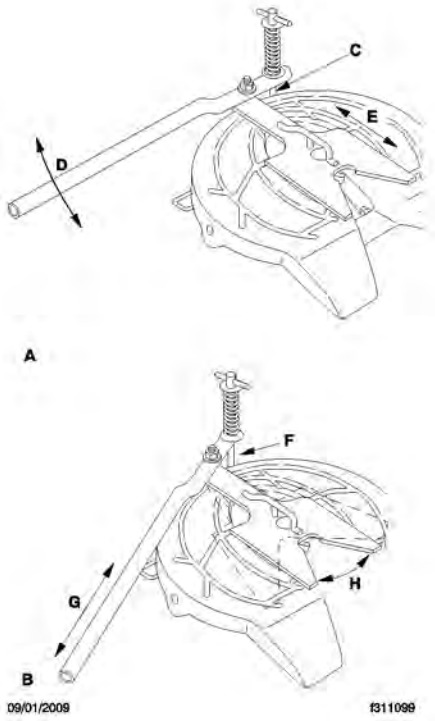

A. Checking for front/rear play..
B. Rotating tester in lock.
C. Engage hook.
D. Pull/push handle front/rear.
E. Check for movement of kingpin in lock.
F. Disengage hook.
G. Push/pull handle inboard/outboard.
H. Rotate lock tester.

Fig 32, Jost Fifth Wheel Adjustment

8. If the lock is improperly adjusted, correct as follows. *If the lock is too tight,* loosen the jam nut, turn the adjustment bolt *clockwise* one full turn, then reset the jam nut. Lock and unlock the mechanism several times to test. Repeat if necessary. See Fig.33,Jost Fifth Wheel *If the lock is too loose,* loosen the jam nut, turn the adjustment bolt *counter-clockwise* one full turn, then reset the jam nut. Lock and unlock the mechanism several times to test. Repeat if necessary. See Fig.33,Jost Fifth Wheel

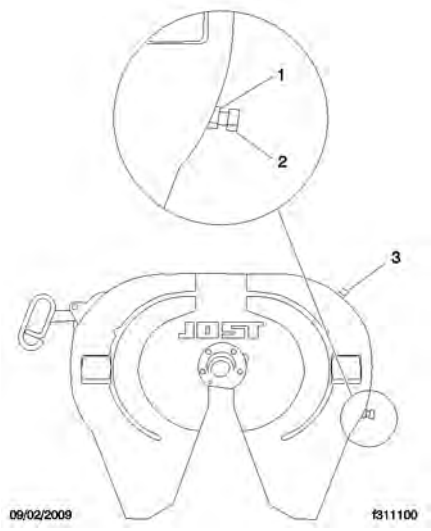

Fig 33, Jost Fifth Wheel

9. If the fifth wheel is equipped with a sliding mechanism, inspect and adjust it as follows.
   - 9.a Check the bracket for any cracks or missing and damaged parts.
   - 9.b Inspect the locking plungers for full engagement.
   - 9.c Check the locking mechanism for proper operation. If the plungers will not release, check the air cylinder or plunger adjustment. If the plungers are loose, check the plunger adjustment and the plunger springs for proper compression. Replace if needed.
   - 9.d The outboard slider assembly requires no adjustment. If the plungers are loose, inspect and replace locking mechanism parts as needed.
   - 9.e The inboard slider is adjustable for frame width and plunger engagement. For adjustment, refer to the fifth wheel installation instructions.
10. Replace cracked, worn, or damaged parts with new parts. Replace all loose mounting bolts with 5/8–11 SAE grade 8 bolts, grade C locknuts, and hardened washers. *Do not* reuse bolts, nuts, and washers on fifth wheel mountings.
11. After inspecting the fifth wheel, lubricate all moving parts with a chassis or multipurpose grease. Apply a generous coating of grease to the top plate to fill the grooves, or depressions, on the top plate. See **MOP 31–02** in this manual for lubrication instructions.

9.03 Fifth Wheel Lubrication

9.03.01 General information

To maintain proper fifth wheel operation, always lubricate the fifth wheel after an inspection has been performed.

IMPORTANT: Lubricate the fifth wheel:

- After power washing, or steam cleaning.

- If the vehicle operates in harsh conditions such as salt spray from road surfaces, or in extremely dusty environments.
- After any service that requires removal of lubricant from the fifth wheel head or components.

9.03.02 Fontaine

WARNING:
Failure to properly lubricate the fifth wheel could result in a possible disengagement of the trailer from the tractor, which could result in personal injury or property damage.

1. Tilt the top plate forward (the front of the fifth wheel is down) and apply grease to each bearing area through the zerk fittings located on each side of the top plate just to the front of the bracket pins. Continue to apply grease until it is coming out of the back of the bearing. It may be necessary to raise the rear of the fifth wheel with a pry bar to open up the pocket slightly and allow the grease to flow through. A substantial amount of grease may be required initially to fill the reservoir. Tilt the fifth wheel ramps down (the rear of the fifth wheel is down) and repeat the greasing procedure. Rock the top plate back and forth several times to spread the grease over the bearing surface.
2. Inspect the trailer kingpin plate and top surface of the fifth wheel to make sure each is properly greased. A liberal coating of grease should be applied to the complete surfaces of both the trailer kingpin plate and the top surface of the fifth wheel.

   NOTE: Do not use a lube plate (high density polyethylene) on top of the fifth wheel or on the kingpin instead of grease without prior approval by Fontaine Fifth Wheel. The additional thickness of this material can prevent the proper operation of the fifth wheel and may cause a dangerous condition.

   NOTE: Fontaine suggests the use of a Moly based lubricant such as Mobilgrease XHP 320 or equivalent when applying lubricant to the locking jaw and wedge.

3. Lubricate the fifth wheel prior to opening and closing it. Separate the jaw and wedge with a screwdriver, and grease the full length of their mating surfaces. Lubricate the top and bottom contact surfaces of the jaw and wedge. See Fig. 34,Fontaine Fifth Wheel Open and close the fifth wheel several times to further distribute the grease. Lightly oil other moving parts in the fifth wheel.

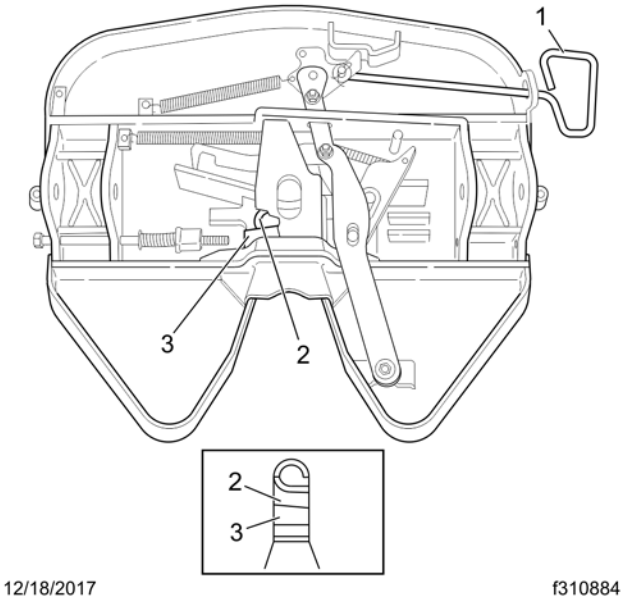

Fig 34, Fontaine Fifth Wheel

4. Apply grease to the top plate. Spread grease all over the mating surface of the top plate. Be sure the grease pockets built into the top plates are full of grease.

9.03.03 Holland FW35

1. Using a water-resistant lithium-base grease, grease the top plate.
2. Using a light oil (such as SAE 10W or 20W motor oil), lubricate the cam track and pivot. See Fig. 35,Holland FW35 Fifth Wheel, Oil Lubrication

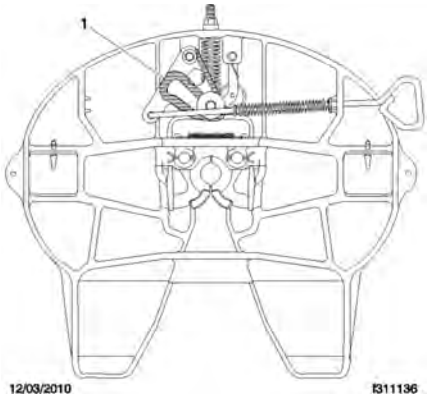

Use a light oil (such as SAE 10W or 20W motor oil) to lubricate the cam track and pivot.

Fig 35, Holland FW35 Fifth Wheel, Oil Lubrication

Use a light oil (such as SAE 10W or 20W motor oil) to lubricate the cam track and pivot.

3. Grease the yoke tips, locks, and the release handle and spring; see Fig. 36,Holland FW35 Fifth Wheel, Grease Lubrication Grease the mounting bracket supports through the grease fittings. A “low temp” grade grease rated for -30°F (-34°C) or lower such as Cato Oil and Grease #5213, Craftsman Chemical Co. #LTF 2, Mystic LP-200, or equivalent is recommended.

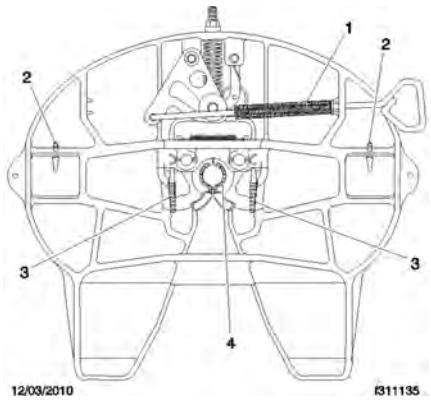

Fig 36, Holland FW35 Fifth Wheel, Grease Lubrication

9.03.04 Jost

Lubricate the kingpin lock using a hand pump grease gun through the grease zerk on the skirt of the fifth wheel; see Fig. 37,Jost Fifth Wheel Apply a light oil to all moving parts. For sliding fifth wheels spray diesel fuel on the slide path of the base plate.

NOTICE:
Do not use a power grease gun. The pressure will damage the lube line.

If the fifth wheel is not equipped with low-lube plates, apply a lithium-based grease with extreme pressure (EP) additive to the trailer contact surface of the fifth wheel.

NOTE: If the fifth wheel is equipped with low-lube plates, the top plate only requires lubrication at the new product break-in stage. The low-lube plates require no further lubrication.

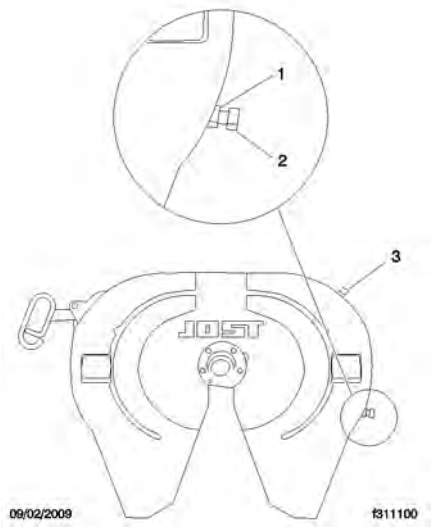

1. Jam Nut
2. Adjustment Bolt
3. Grease Zerk

Fig 37, Jost Fifth Wheel

9.04 Frame Fastener Torque Check

Frame brackets and components secured with Huckbolt® fasteners do not require a torque check, however, they should be inspected for damage. Frame brackets and components secured with conventional bolts and nuts are to be checked at initial maintenance (IM). Check the torque of frame fasteners to offset the effects of "bedding in" (or seating). When checking torque, torque the nut, not the bolt head whenever possible. This will give a true torque reading by eliminating bolt-body friction. When checking the torque of frame fasteners, inspect the frame for cracks and other damage. Set a click-type torque wrench to the maximum torque of the fastener you are checking. Apply pressure until the torque wrench clicks. Do not loosen the bolt to check the torque. See in the vehicle workshop manual for torque specifications.

NOTICE:

Make sure frame fasteners are properly tightened. Continued vehicle operation with loose fasteners could result in bracket or frame damage.

Check the fasteners at the following locations:

- axle stops
- deck plates
- equalizer brackets
- exhaust brackets
- fifth wheel legs
- fifth wheel mountings
- frame crossmembers and gussets
- front frame brackets
- front suspension spring brackets
- fuel tank brackets

- radius rods
- rear suspension spring brackets
- shock absorbers
- all other suspension fasteners
- all other axle fasteners
- all other frame fasteners

Any component that shows signs of cracking or other damage must be repaired or replaced. Refer to the vehicle workshop manual for repair or replacement information.

10.01 Safety Precautions 70
10.02 Suspension Inspection 70
10.02.01 General Information 70
10.02.02 Front Suspension Check 70
10.02.03 Front and Rear Suspension Shock Absorber Check 70
10.02.04 Western Star AirLiner Rear Suspension Check 71
10.02.05 Suspension U-Bolt Torque Check 75

10. Suspension

10.01 Safety Precautions

Safety Precautions in this section apply to all procedures within this group.

DANGER:

When working on the vehicle, shut down the engine or motor, set the parking brake, and chock the tires. Before working under the vehicle, always place jack stands under the frame rails to ensure the vehicle cannot drop. Failure to follow these steps could result in serious personal injury or death.

10.02 Suspension Inspection

10.02.01 General Information

WARNING:

Do not replace individual leaves of a damaged leaf spring assembly; replace the complete spring assembly. Visible damage (cracks or breaks) to one leaf causes hidden damage to other leaves. Replacement of only the visibly damaged part(s) is no assurance that the spring is safe. On front spring assemblies, if cracks or breaks exist in the two top leaves, a loss of vehicle control could occur. Failure to replace a damaged spring assembly could cause an accident resulting in property damage, serious personal injury, or death.

10.02.02 Front Suspension Check

Inspect the front spring assemblies for cracked, broken, or abnormally bent leaves. If any of these conditions exist, replace the spring assembly; see of the **57X Workshop Manual** .

Inspect the spring bushings for wear or other damage. If any of these conditions exist, replace the damaged bushings.

10.02.03 Front and Rear Suspension Shock Absorber Check

Make sure the shock absorber brackets are tight, and the shock absorber is not striking or rubbing the frame or some other part of the chassis. Striking or rubbing the frame is characterized by chafe marks on the shock absorber body and the frame rail; see Fig.38,Direct-Acting Shock Absorber (front suspension shown) Check the rubber mounting bushings for cracks, cuts, swelling, dry rot, or missing pieces. If the shock absorber bushings are no longer serviceable, replace the shock absorber with a new one.

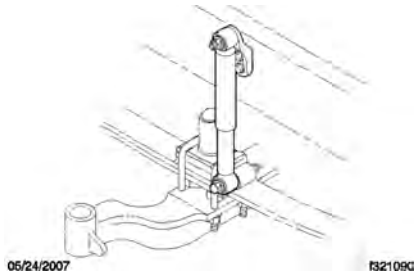

Fig 38, Direct-Acting Shock Absorber (front suspension shown)

Inspect the shock absorber for oil leakage. Some misting of the oil is normal, and does not mean the shock is leaking. If the shock absorber is damaged or leaking, replace it with a new one; see of the **57X Workshop Manual** .

10.02.04 Western Star AirLiner Rear Suspension Check

Components Checking

Inspect the forward spring brackets for wear, cracks, and other damage. If any of these conditions exist, replace the damaged bracket(s); see of the **57X Workshop Manual** .

Inspect the spring bushings for wear or other damage. If any of these conditions exist, replace the damaged bushings.



WARNING:

Replace worn, cracked, or damaged spring brackets. Failure to do so could result in bracket breakage, possibly leading to loss of vehicle control and resulting in personal injury or property damage.

Inspect the crossmember(s) and gussets for wear, cracks, and other damage. If any of these conditions exist, replace the damaged parts; see of the **57X Workshop Manual**.

Visually check the air spring piston for cracks, chips, and broken areas. Check the air bag for rips, tears, and holes. Verify that the air spring assembly does not leak. If any of these conditions exist, replace the damaged parts; see of the **57X Workshop Manual**.

Suspension Height Checking

IMPORTANT: Before checking the AirLiner suspension height, make sure there is no load on the chassis, and the trailer is unhitched.

IMPORTANT: To prevent voiding the warranty on Barksdale height-control valves, note the following:

- Do not overtighten the bolts in the Barksdale height-control valve housing. The bolts should not be loose, and should not require tightening. Only if necessary, tighten the valve housing bolts 45 lbf·in (508 N·cm). Any damage to the valve housing will void the warranty.
- Do not attempt to disassemble the Barksdale valve body or the control lever. There are no serviceable parts in the valve, and any disassembly will void the warranty.



NOTICE:

When removing or loosening a Barksdale height-control valve from a mounting bracket, always hold the valve-side mounting studs in place with an Allen wrench while loosening or tightening the nuts that attach the valve to the bracket. Because the mounting studs are threaded into the valve body, loosening the nuts without holding the studs can tighten the studs, which can crush the valve body and damage the valve. Conversely, tightening the nuts without holding the studs can back the studs out, causing a separation of the two halves of the valve body, and possibly a leak.

1. Park the vehicle on a level surface, using a light application of the brakes. Do not apply the parking brakes. Shift the transmission into neutral, and build the secondary air pressure to at least 100 psi (690 kPa). Shut down the engine. Have an assistant chock the tires on one axle only.
2. Mark the location of the front and rear tires on the floor.

IMPORTANT: **For suspensions with dual-leaf springs,** measure between the top of the U-bolt and the bottom of the axle stop. **For suspensions with single-leaf springs** , measure between the top of the U-bolt **pad** and the bottom of the axle stop.

NOTE: The stud bolt that fastens the valve's height-control lever to the vertical linkage is oriented correctly when the linkage rod is vertical, as viewed from the side of the vehicle; see Fig.39,, page 72 The rod may be on the forward or aft side of the lever to get it to be vertical.

3. Measure the distance between the left forwardmost axle stop and the suspension as indicated; see Table.14,Suspension Ride-Height Measurement, Dual-Leaf Spring, 21k/40k High Ride, Table.15,Suspension Ride-Height Measurement, Single-Leaf Spring, 40k Low and Mid Ride, Table.16, **Suspension Ride-Height Measurement, Single-Leaf Spring, 40k Low and Mid Ride**, Table.17, **Suspension Ride-Height Measurement, Dual-Leaf Spring, 23k High Ride** and Table.18, **Suspension Ride-Height Measurement, Dual-Leaf Spring, 46k High Ride** for an acceptable range of heights for each suspension.

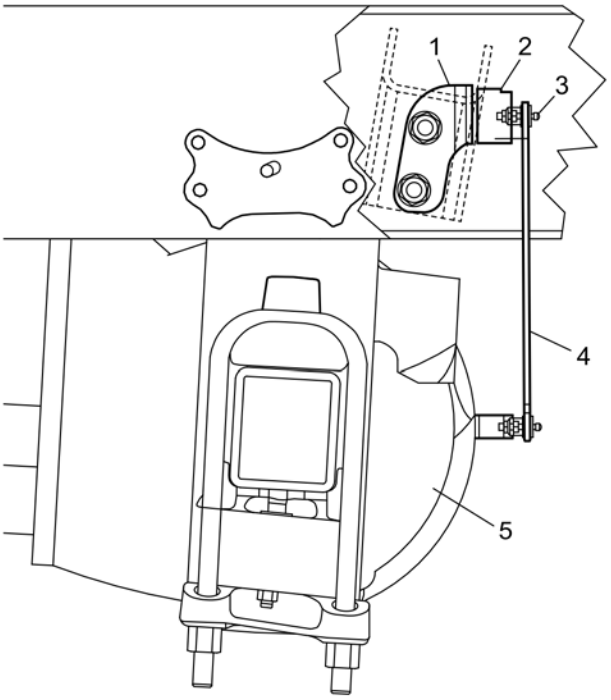

A. The screw tip must extend about 1/4 inch (6 mm).
B. Belleville washers must collapse almost flat.

1. Tightening Screw Hex

Fig 39, Barksdale Height-Control Valve Installation (side view) (typical)

4. If the measurement is not within the acceptable range, refer to the **57X Workshop Manual** for adjustment instructions. If the distance is within the acceptable range, apply the parking brakes.

Table 14, Suspension Ride-Height Measurement, Dual-Leaf Spring, 21k/40k High Ride

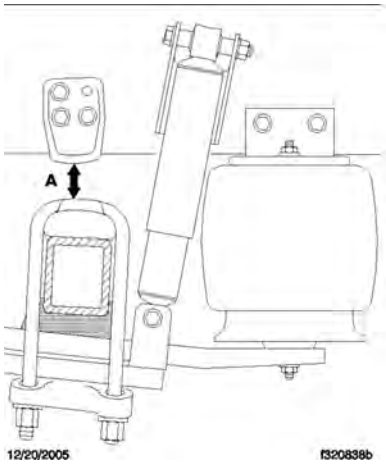

Measure Point	Suspension Height Measurement		
	Min	Target	Max
A = Measure Here	2-3/8 inch (60 mm)	2-5/8 inch (67 mm)	2-7/8 inch (73 mm)

Table 14, Suspension Ride-Height Measurement, Dual-Leaf Spring, 21k/40k High Ride

Table 15, Suspension Ride-Height Measurement, Single-Leaf Spring, 40k Low and Mid Ride

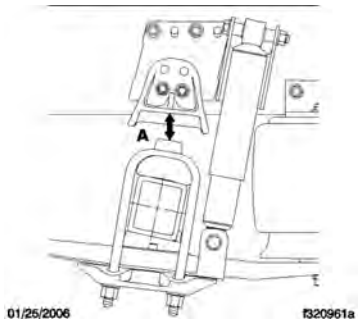

Measure Point	Suspension Height Measurement		
	Min	Target	Max
A = Measure Here	2-3/8 inch (60 mm)	2-5/8 inch (67 mm)	2-7/8 inch (73 mm)

Table 15, Suspension Ride-Height Measurement, Single-Leaf Spring, 40k Low and Mid Ride

Table 16, Suspension Ride-Height Measurement, Single-Leaf Spring, 40k Low and Mid Ride

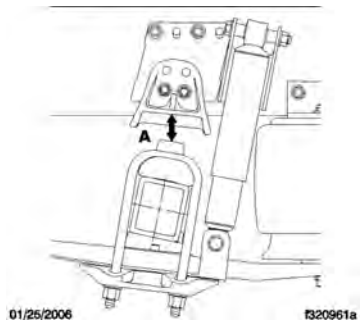

Measure Point	Suspension Height Measurement		
	Min	Target	Max
A = Measure Here	2-3/8 inch (60 mm)	2-1/2 inch (64 mm)	2-7/8 inch (73 mm)

Table 16, Suspension Ride-Height Measurement, Single-Leaf Spring, 40k Low and Mid Ride

Table 17, Suspension Ride-Height Measurement, Dual-Leaf Spring, 23k High Ride

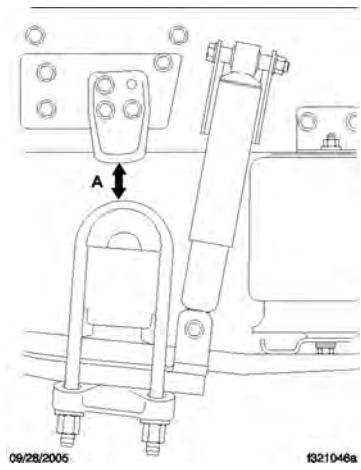

Measure Point	Suspension Height Measurement		
	Min	Target	Max
A = Measure Here	2-3/4 inch (70 mm)	3 inch (76 mm)	3-1/4 inch (83 mm)

Table 17, Suspension Ride-Height Measurement, Dual-Leaf Spring, 23k High Ride

Table 18, Suspension Ride-Height Measurement, Dual-Leaf Spring, 46k High Ride

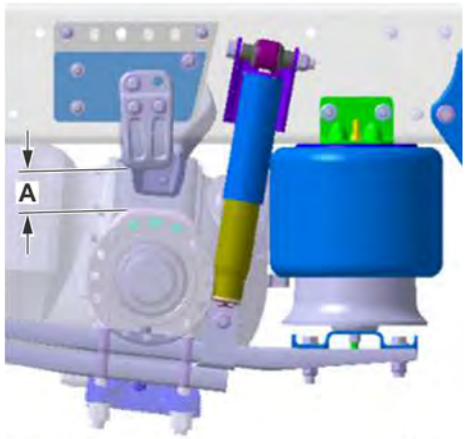

Measure Point	Suspension Height Measurement		
	Min	Target	Max
A = Measure Here	2-3/4 inch (70 mm)	3 inch (76 mm)	3-1/4 inch (83 mm)

Table 18, Suspension Ride-Height Measurement, Dual-Leaf Spring, 46k High Ride

10.02.05 Suspension U-Bolt Torque Check

NOTICE:
Failure to retorque the U-bolt nuts could result in spring breakage and abnormal tire wear.

Check the U-bolt torque of both the front and rear axles where applicable.

1. Park the vehicle on a level surface and apply the parking brakes. Chock the tires.
2. Check the U-bolt torque. See Table.19,Spring U-Bolt High Nut Torque Values for U-bolt torque specifications. Tighten in a diagonal pattern as shown in Fig.40,Tightening Pattern for U-Bolt High Nuts. Set a click-type torque wrench to the mid-point torque value for the fastener being checked. Turn the wrench in a clockwise motion (looking up) until the torque wrench clicks, then release pressure on the torque wrench, and turn the wrench again until it clicks. If the nut turns on the second application, the bolt is stretching and must be replaced. See of the **57X Workshop Manual** for bolt replacement procedures.

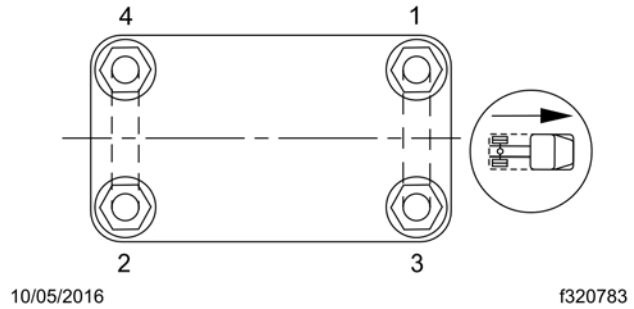

Fig 40, Tightening Pattern for U-Bolt High Nuts

Table 19, Spring U-Bolt High Nut Torque Values

Spring U-Bolt High Nut Torque Values	
Size	**Torque: lbf·ft (N·m)**
5/8–18	180–230 (244–312)
3/4–16	270–330 (366–447)
7/8–14	420–500 (569–678)
1–14	520–600 (705–813)
M20	216–274 (293–371)
M20 (Airtek)	330–370 (447–502)

Table 19, Spring U-Bolt High Nut Torque Values

11.01 Safety Precautions 78
11.02 Knuckle Pin Lubrication 78
11.02.01 Detroit® Axles 78
11.02.02 Meritor Axles 79
11.03 Inspection of the Tie Rod 80
11.04 Lubrication of the Tie Rod 80
11.05 All-Axle Alignment Check 81
11.05.01 Checking the Drive Axle Alignment 81
11.05.02 Toe-In Inspection 81
11.06 Steer Axle Hub Cap Vent Plug Inspection 83
11.06.01 General Information 83
11.06.02 Inspection 85

11. Front Axle

11.01 Safety Precautions

Safety Precautions in this section apply to all procedures within this group.

DANGER:

When working on the vehicle, shut down the engine or motor, set the parking brake, and chock the tires. Before working under the vehicle, always place jack stands under the frame rails to ensure the vehicle cannot drop. Failure to follow these steps could result in serious personal injury or death.

11.02 Knuckle Pin Lubrication

11.02.01 Detroit® Axles

NOTICE:

Use regulated pressure when lubricating the knuckle assemblies, otherwise damage could result to the knuckle caps.

1. Park the vehicle on a level surface, shut down the engine, and set the parking brake. Chock the tires. When lubricating upper and lower knuckle assemblies, do not raise the front axle.
2. Wipe the fittings clean.
3. Apply multipurpose chassis grease, NLGI Grade 1 (6% 12-hydroxy lithium stearate grease) or NLGI Grade 2 (8% 12-hydroxy lithium stearate grease), until new grease is seen at the junctions of the axle beam and knuckles. For locations of grease fittings, See Fig.41,Grease Fittings, Detroit Axles for grease exit points, see Fig. 42,Knuckle Pin Lubrication.

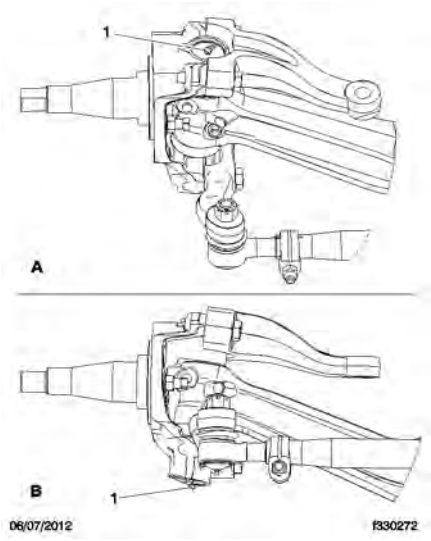

A. Upper View, LH Side
B. Lower View, LH Side
1. Grease Fitting

Fig 41, Grease Fittings, Detroit Axles

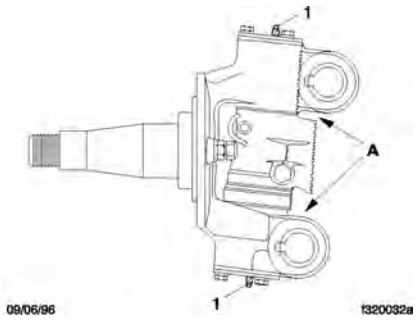

A. Grease Exit
1. Grease Fitting

Fig 42, Knuckle Pin Lubrication

11.02.02 Meritor Axles

NOTICE:
Use regulated pressure when lubricating the knuckle assemblies, otherwise damage could result to the knuckle caps.

1. When lubricating knuckle pin bushings, do not raise the front axle. Wipe the lube fittings clean, and apply multipurpose chassis grease, NLGI Grade 1 (6% 12-hydroxy lithium stearate grease) or NLGI Grade 2 (8% 12-hydroxy lithium stearate grease) until new grease is seen at the bushing grease seal opposite the fittings. The grease seal will accept grease pressure without damage, and is designed to have grease pumped out through it during lubrication. Even if grease leaks out around the top, or bottom-plate gasket, continue pumping until new grease is seen at the bushing seal opposite the grease fitting. See Fig.43,Knuckle Pin Lubrication

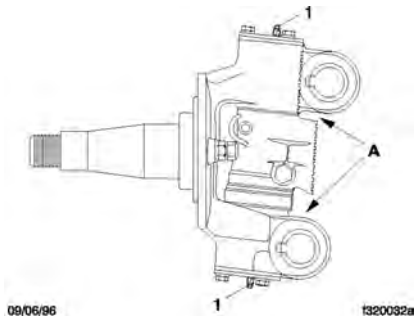

A. Grease Exit
1. Grease Fitting

Fig 43, Knuckle Pin Lubrication

11.03 Inspection of the Tie Rod

Inspect the tie-rod ends as follows:

1. Shake the cross-tube. A loose fit, or movement between the tapered shaft of the ball and the cross-tube socket members indicates that the tie-rod end assembly must be replaced.
2. The threaded portion of the tie-rod end assembly must be inserted all the way into the cross-tube split for adequate clamping. See Fig.44,Tie-Rod End Adjustment Replace the components if this cannot be done. For instructions, refer toof the **57X Workshop Manual** .

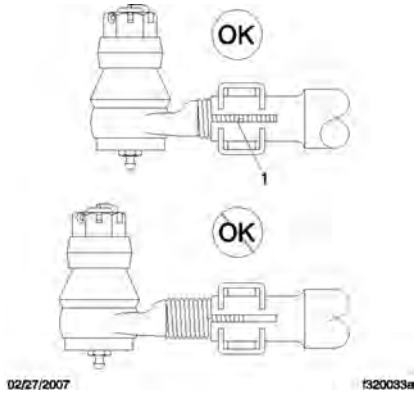

NOTE: Shown without pinch bolt to provide clarity.

Fig 44, Tie-Rod End Adjustment

11.04 Lubrication of the Tie Rod

Detroit and Meritor Axles

For any Detroit or Meritor axle that requires lubrication of the tie-rod ends, wipe the grease fittings clean, then pump multi-purpose chassis grease, NLGI Grade 1 (6% 12-hydroxy lithium stearate grease) or NLGI Grade 2 (8% 12-hydroxy lithium stearate grease), into the tie-rod ends until all used grease is forced out and fresh grease is seen at the ball stud neck. See Fig.45, **Grease Fitting and Boot (Detroit axle shown)**

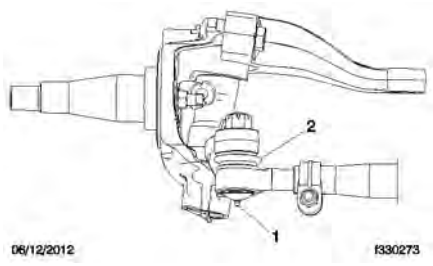

NOTE: No grease should emit from the tie-rod boot. If grease emits from the tie-rod boot, the boot is damaged.

Fig 45, Grease Fitting and Boot (Detroit axle shown)

11.05 All-Axle Alignment Check

11.05.01 Checking the Drive Axle Alignment

Check the axle alignment, parallelism, and thrust angle measurements for the rear drive axles. Use the applicable procedure and specifications in of the **57X Workshop Manual** .

11.05.02 Toe-In Inspection

For vehicle alignment to be accurate, the shop floor must be level in every direction. The turn plates for the front wheels must rotate freely without friction, and the alignment equipment must be calibrated every three months by a qualified technician from the equipment manufacturer. Western Star dealers must have proof of this calibration history

1. Apply the parking brakes and chock the rear tires.
2. Raise the front of the vehicle until the tires clear the ground. Place safety stands under the axle.
3. Using spray paint or a piece of chalk, mark the entire center rib of each front tire.
4. Place a scribe or pointed instrument against the marked center rib of each tire, and turn the tires. The scribe must be held firmly in place so that a single straight line is scribed all the way around each front tire.
5. Place a turn-plate or turntable under both front tires. Remove the safety stands and lower the vehicle. Remove the lock-pins from the gauges; make sure the tires are exactly straight ahead.

   NOTE: If turn-plates or turntables are not available, lower the vehicle. Remove the chocks from the rear tires and release the parking brakes. Move the vehicle backward, then forward about six feet (two meters).

6. Place a trammel bar at the rear of the front tires; locate the trammel pointers at spindle height, and adjust the pointers to line up with the scribe lines on the center ribs of the front tires. See Fig.46,Wheel Toe-In (overhead view) Lock in place. Check that the scale is set on zero.

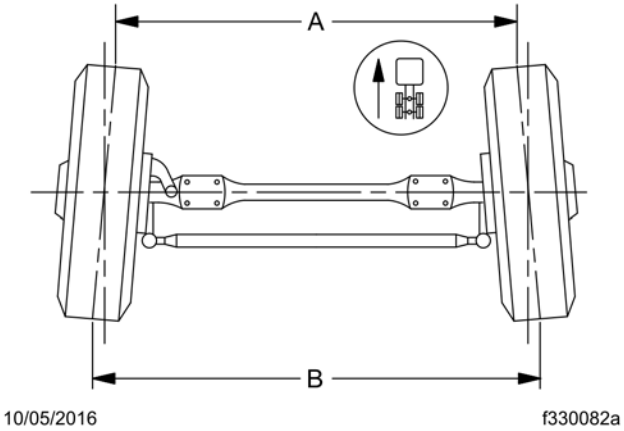

NOTE: B minus A equals toe-in.

Fig 46, Wheel Toe-In (overhead view)

7. Place the trammel bar at the front of the tires, as shown in Fig.47,Trammel Bar Positioning and adjust the scale end so that the pointers line up with the scribe lines. See Fig.48, Setting Trammel Bar Pointers

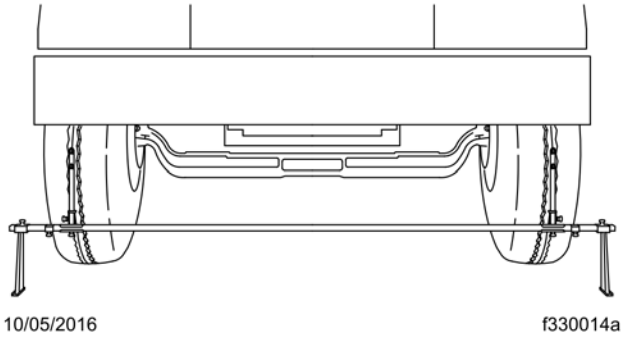

Fig 47, Trammel Bar Positioning

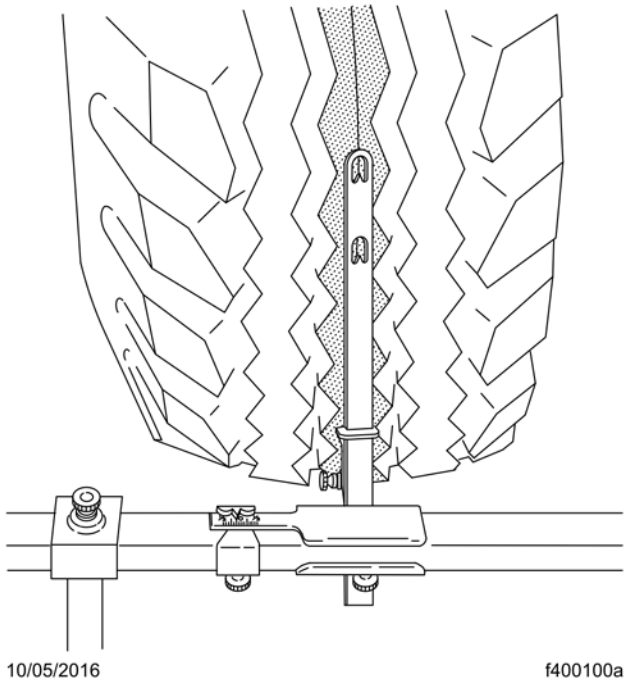

Fig 48, Setting Trammel Bar Pointers

8. Read the toe-in from the scale, and compare it to the toe-in specification in of the **57X Workshop Manual**. If corrections are needed, refer to of the **57X Workshop Manual** for instructions on adjusting the toe-in.

11.06 Steer Axle Hub Cap Vent Plug Inspection

11.06.01 General Information

As a function of their design, hubcap vent plugs will on occasion exhibit signs of hub oil on their exterior surface. Depending on environmental conditions and/or age of the plug, the amount of oil present can vary. This is a normal result of the venting process due to pressure increase within the hub cavity. For an example of normal vent plug appearance, see Fig. 49, **Normal Oil Venting**



Fig 49, Normal Oil Venting

A vent plug can wear or be damaged and cause excessive leakage, or allow water to enter the hub and contaminate the oil. For examples of a leaking vent plug, see Fig.50, **Excessive Leakage** and Fig.51, **Water in Oil** Evidence of a leaking vent plug may appear as;

- Oil splatter around the wheel
- Gooey/gummy oil around the vent plug purge point
- Hub/plug area is dirty, and water contaminated oil in the hub.
- Hub/plug area is clean, but there is water contaminated oil in the hub. (pressure washing is the most likely cause)

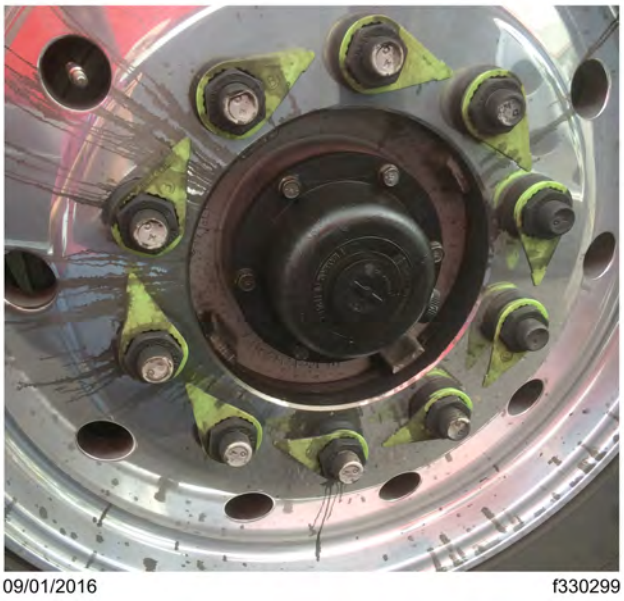

Fig 50, Excessive Leakage

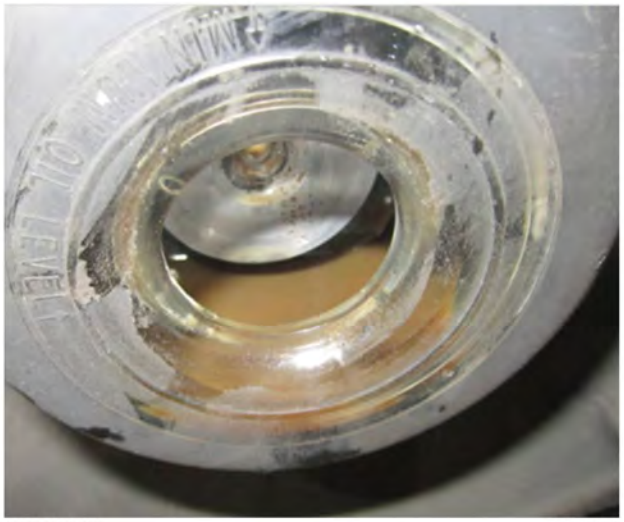

Fig 51, Water in Oil

11.06.02 Inspection

NOTICE:

Only remove vent plugs by hand. They can be damaged if a tool is used. Wipe the hub/plug area clean before checking the oil. Do not use a pressure washer to clean the hub/plug area. The plug has a vent and this can contaminate the oil with water.

1. Park the vehicle on a level surface, shut down the engine and set the parking brakes. Chock the tires.
2. Inspect the axle hub cap and vent plug for evidence of excessive leakage.
3. Wipe the hub cap and vent plug clean with a rag.
4. Remove the vent plug and check the oil for evidence of water contamination. If there is evidence of water contaminated oil in the hub, disassemble the effected axle end, clean, inspect, and reassemble the axle end. For instructions, refer to of the vehicle workshop manual. If there is evidence of excessive leakage, remove the damaged part and replace it with a new part.
5. Check the oil level in the hub, and fill the hub with new approved oil as needed.

12.01 Safety Precautions 88
12.02 Axle Lubricant and Filter Change, and Magnetic Strainer Cleaning 88
12.02.01 Detroit® Model 4 and Model 6 88
12.02.02 Detroit New Final Drive 90
12.02.03 Meritor® 92
12.02.04 Dana® Spicer® 96
12.02.05 Two-Speed Axles With Shift Unit 98
12.03 Axle Breather and Axle Lubricant Level Inspection 99
12.03.01 Detroit® Model 4 and Model 6 99
12.03.02 Detroit® New Final Drive 101
12.03.03 Meritor® 103
12.03.04 Dana® Spicer® 105
12.03.05 Two-Speed Axles With Shift Unit 107

12. Rear Axle

12.01 Safety Precautions

Safety Precautions in this section apply to all procedures within this group.

DANGER:

When working on the vehicle, shut down the engine or motor, set the parking brake, and chock the tires. Before working under the vehicle, always place jack stands under the frame rails to ensure the vehicle cannot drop. Failure to follow these steps could result in serious personal injury or death.

12.02 Axle Lubricant and Filter Change, and Magnetic Strainer Cleaning

12.02.01 Detroit® Model 4 and Model 6

NOTICE:

When operating under adverse conditions, it may be necessary to change the axle lubricant at more frequent intervals than listed in the scheduled maintenance tables. Failure to do so could result in axle damage.

For all axles, including tandem drive axles and two-speed axles, perform the applicable procedures under the heading, ‘All Axle Models.’ For a two-speed axle with a shift unit, also change the shift unit lubricant; see under the heading, ‘Two-Speed Axles With Shift Unit.’

1. Park the vehicle on a level surface, shut down the engine, and set the parking brake. Chock the tires.
2. Clean the fill plug and the area around it. In the axle housing rear cover, remove the plug from the oil fill hole. See Fig. 52,Detroit Model 4 and Model 6 Tandem Axle (forward axle shown).

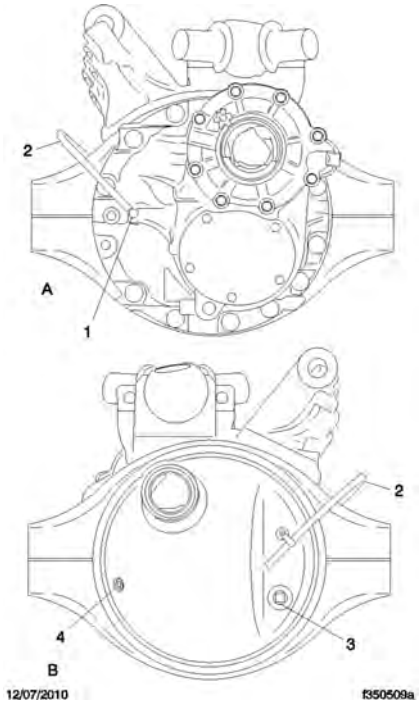

A. Front View
B. Rear View
1. Axle Breather
2. Breather Hose
3. Temperature Sensor Port
4. Oil Fill Plug

Fig 52, Detroit Model 4 and Model 6 Tandem Axle (forward axle shown)

CAUTION:
Be careful when draining the axle oil. It may be very hot, and could cause personal injury if it contacts the skin.

3. Place a drain pan under the rear axle drain plug. Drain the oil when it is warm. At this temperature, the oil will run more freely and ensure that the axle is flushed.
4. Clean the fill and drain plugs. Change them if necessary.
   - 4.a For magnetic plugs, use a piece of key stock or any other convenient steel slug to short the two magnetic poles and divert the magnetic field.
   - 4.b Clean away the collected material deposited on each pole. Magnets will rapidly lose their effectiveness as collected material bridges the gap between the two poles.
   - 4.c After the first oil is changed, inspect the drain plug each time for large quantities of metal particles.
   - 4.d After cleaning, install the drain plug(s) and tighten to 30 lbf·ft (41 N·m).
5. Fill the axle with the recommended lubricant. See20,Detroit Drive Axle Lubricants, Model 4 and Model 6for recommended drive axle lubricants and 21,Detroit Rear Axle Lubricant Capacity, Model 4 and Model 6 for lubricant capacities.
   - 5.a Fill the axle through the oil fill hole. Lubricant should be level with the bottom of the oil fill hole. To check fluid level, see Fig.53, **Axle Lubricant Level Inspection**

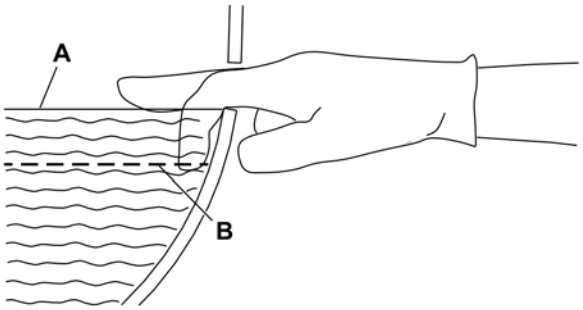

A. Correct (lube level at bottom of fill hole) B. Incorrect (lube level below fill hole)

Fig 53, Axle Lubricant Level Inspection

5.b Install and tighten the fill plug 30 lbf·ft (41 N·m).

Table 20, Detroit Drive Axle Lubricants, Model 4 and Model 6

Detroit Drive Axle Lubricant, Model 4 and Model 6[1]		
Lubricant	**Type**	**Ambient Temperature**
Mobil Delvac 1 Gear Oil 75W-90	Synthetic	–40°F (–40°C)[2] and up
IMPORTANT: Lubricant used in Detroit rear axles must meet Mercedes-Benz specification 235.8/Detroit Fluids Specification (DFS) 93K219.01. Mobil Delvac 1 Gear Oil 75W-90 meets this specification. For more product information, see http://bevo.mercedes-benz.com or https://ddcsn-ddc.freightliner.com/cps/rde/xchg/ddcsn/hs/5931.htm		

1. Detroit rear axles do not require the use of friction modifiers.
2. There is no upper limit on the ambient temperature.

Table 20, Detroit Drive Axle Lubricants, Model 4 and Model 6

Table 21, Detroit Rear Axle Lubricant Capacity, Model 4 and Model 6

Detroit Rear Axle Lubricant Capacity, Model 4 and Model 6 (Hubs Full)	
Axle	**Oil Capacity: Quarts (liters)**
Forward-Rear, Model 4	14.3 (13.5)[1]
Single and Rearmost Tandem, Model 4	10.6 (10.0)[2]

1. These values assume the wheel ends are properly lubricated. Actual oil capacity might vary slightly depending on gear ratio.
2. These values assume the wheel ends are properly lubricated. Actual oil capacity might vary slightly depending on gear ratio.

Table 21, Detroit Rear Axle Lubricant Capacity, Model 4 and Model 6

12.02.02 Detroit New Final Drive

1. Park the vehicle on a level surface, shut down the engine, and set the parking brake. Chock the tires.
2. Clean the fill plug and the area around it. In the carrier housing, remove the plug from the oil fill hole. See Fig. 54,Detroit New Final Drive Forward Axle, Oil Fill Location for the forward axle, and Fig. 55,Detroit New Final Drive Rear Axle, Oil Fill Location for the rear axle.

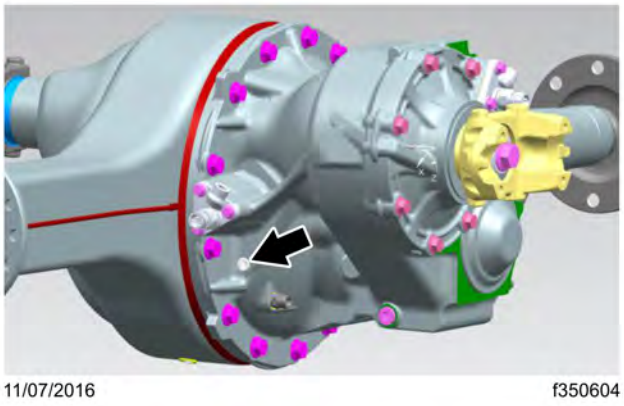

Fig 54, Detroit New Final Drive Forward Axle, Oil Fill Location

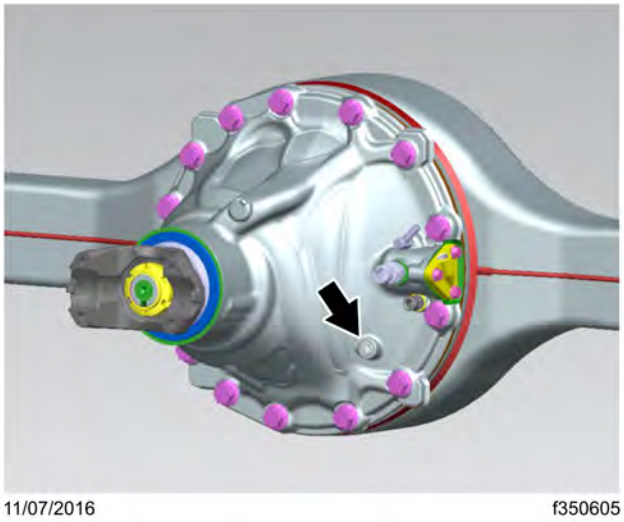

Fig 55, Detroit New Final Drive Rear Axle, Oil Fill Location

CAUTION:
Be careful when draining the axle oil. It may be very hot, and could cause personal injury if it contacts the skin.

3. Place a drain pan under the rear axle drain plug. Drain the oil when it is warm. At this temperature, the oil will run more freely and ensure that the axle is flushed.
4. Clean the fill and drain plugs. Change them if necessary.
   4.a For magnetic plugs, use a piece of key stock or any other convenient steel slug to short the two magnetic poles and divert the magnetic field.

4.b Clean away the collected material deposited on each pole. Magnets will rapidly lose their effectiveness as collected material bridges the gap between the two poles.

4.c After the first oil is changed, inspect the drain plug each time for large quantities of metal particles.

5. Fill the axle with the recommended lubricant. See Table.22, **Detroit Drive Axle Lubricants, New Final Drive** for recommended drive axle lubricants and Table.23,New Final Drive Oil Capacity, New Final Drive for lubricant capacities.

Table 22, Detroit Drive Axle Lubricants, New Final Drive

Detroit Drive Axle Lubricant, New Final Drive[1]		
Lubricant	**Type**	**Ambient Temperature**
Must meet Detroit Fluids Specification (DFS) 93K219.03	Synthetic	–40°F (–40°C) and up[2]

1. *Detroit rear axles do not require the use of friction modifiers.
2. †There is no upper limit on the ambient temperature, but axle sump temperature must never exceed 250°F (121°C).

Table 22, Detroit Drive Axle Lubricants, New Final Drive

Table 23, New Final Drive Oil Capacity, New Final Drive

New Final Drive Oil Capacity, New Final Drive		
Axle Type	**Oil in Hubs (2)**	**Oil in Axle**
NFD Model 4 Forward Axle TP	1.8 L	9 L
NFD Model 4 Rear Rear Axle TP	1.8 L	7.5 L
NFD Model 4 Forward Axle SP	1.8 L	14 L
NFD Model 4 Rear Rear Axle SP	1.8 L	11 L
NFD Model 6 TP	1.8 L	9.5 L
NFD Model 6 SP	1.8 L	11 L

Table 23, New Final Drive Oil Capacity, New Final Drive

12.02.03 Meritor®

IMPORTANT: On Meritor axles, the oil change interval for Schedule III vehicles is extended to 500,000 miles (800 000 km) for axles using synthetic lubricant with a pump and filter system.On single drive axles so equipped, the traction equalizer may slip or stick. When this happens, the driver will hear intervals of shrill noises when the vehicle is driven at low speed or makes sharp turns. Use a "limited-slip friction modifier" to correct this slip/stick condition. Add 1.6 ounces (35 mL) of additive for each pint (0.5 L) of lube capacity.For all GL-5 oils, add one of the following limited-slip friction modifiers:

- Lubrizol No. 6178 (Lubrizol Corporation)
- DSL-178 (Guardsman Products)
- Equa-Torque No. 2411 (Sta-Lube Corporation)
- Equa-Torque No. 2414 (Sta-Lube Corporation)

IMPORTANT: These friction modifiers generally deteriorate faster than conventional extreme-pressure additives, so the lubricant change schedule must be shortened when using these additives. The traction equalizer additive (and recommended drive axle lubricant) must be changed at the Maintenance 2 (M2) interval, instead of the Maintenance 3 (M3) interval recommended in the Maintenance Operation Chart for axles that require only those lubricants recommended in Table.24,, page 93.

1. Park the vehicle on a level surface, shut down the engine, and set the parking brake. Chock the tires.
2. Remove the axle carrier fill plug. Then remove the drain plug from the bottom of the housing. Completely drain the lubricant while the unit is warm, to allow the lubricant to drain faster. On tandem drive axles, it is also necessary to remove the plug at the bottom of the interaxle differential housing to drain that lubricant.
3. If equipped with an oil pump, use a suitable filter strap wrench to remove the axle oil filter. See Fig. 56,Meritor Axle Oil Filter Removal Discard the old filter.

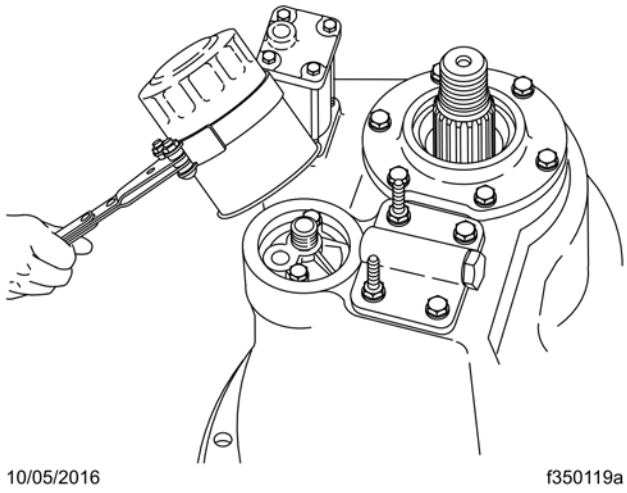

Fig 56, Meritor Axle Oil Filter Removal

NOTE: There may be about one pint (0.5 L) of lubricant remaining in the filter. Be careful not to spill it when removing the filter.

4. Using the recommended drive axle lubricant, coat the face of the gasket on the new oil filter, if it was replaced. Install the filter over the adapter, and tighten the filter one full turn after the gasket contacts the base; do not overtighten. See Table.24,Meritor Drive Axle Recommended Lubricant for recommended lubricants.

Table 24, Meritor Drive Axle Recommended Lubricant

Meritor Drive Axle Recommended Lubricant			
Recommended Lubricant Type	**Ambient Temperature**	**Lubricant SAE Viscosity Grade**	**Meritor Specification**
Synthetic Gear Oil	–40°F (–40°C) and Up[1]	75W–90	0–76–N

	–40°F (–40°C) and Up[2]	75W–140	0–76–M

1. There is no upper limit on these outside temperatures, but axle sump temperature must never exceed 250°F (121°C).
2. There is no upper limit on these outside temperatures, but axle sump temperature must never exceed 250°F (121°C).

Table 24, Meritor Drive Axle Recommended Lubricant

5. Clean the fill and drain plugs. Change them if necessary.
   - 5.a For magnetic plugs, use a piece of key stock or any other convenient steel slug to short the two magnetic poles and divert the magnetic field.
   - 5.b Check the drain plug for metal particles every 100,000 miles (160 000 km). Clean away the collected material deposited on each pole. Magnets will rapidly lose their effectiveness as collected material bridges the gap between the two poles.
   - 5.c Each time the oil is changed, replace any magnetic drain plug that does not meet the minimum pickup capacity.

     NOTE: Meritor recommends plugs with elements having a minimum pickup capacity of 1.5 pounds (0.7 kg) of low-carbon steel.

   - 5.d After cleaning, install the drain plug(s) and tighten to 35 lbf·ft (47 N·m).
6. Fill the axle with recommended lubricant. See Table.25,Table 6, Meritor Drive Axle Lubricant Capacities for drive axle lubricant capacities.

   NOTE: Some Meritor axles have a small tapped and plugged hole near and below the housing lubricant fill hole. This smaller hole is for a lubricant temperature indicator only, and should not be used as a fill or level hole.

   - 6.a With the vehicle on a level surface, fill the axle through the oil fill hole. Lubricant should be level with the bottom of the oil fill hole. To check fluid level, see Fig.57,Axle Lubricant Level Inspection

Table 25, Table 6, Meritor Drive Axle Lubricant Capacities

Meritor Drive Axle Lubricant Capacities		
Axle Model		Capacity:pt (L)[1]
Single Drive, Single Reduction [2]		
RS–21–160		39.5 (18.7)
RS–23–160		39.5 (18.7)
RS–23–161		37.2 (17.6)
RS–23–185		47.3 (22.4)
RS–25–160		37.2 (17.6)
Tandem Drive, Single Reduction		
RT–40–145, RT–40–145A, RT–40–145P	Forward	30.2 (14.3)
	Rear	25.8 (12.2)
RT–44–145, RT–44–145P	Forward	29.3 (13.9)
	Rear	25.1 (11.9)
RT–46–160, RT–46–160P	Forward	39.1 (18.5)
	Rear	34.4 (16.3)

1. *Quantities listed are approximate. Fill axle until lubricant is level with bottom of fill hole with vehicle on level ground.
2. †See "Traction Equalizer Additives" in the text.

Table 25, Table 6, Meritor Drive Axle Lubricant Capacities

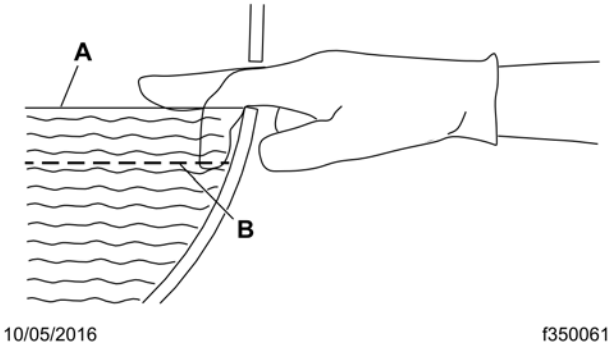

A. Correct (lube level at bottom of fill hole) B. Incorrect (lube level below fill hole)

Fig 57, Axle Lubricant Level Inspection

6.b Install and tighten the fill plug 35 lbf·ft (47 N·m).

7. Whenever the interaxle differential housing has been drained, add an additional 2 pints (0.9 L) of the recommended lubricant directly into the interaxle differential housing.

8. Remove the chocks, then drive the vehicle, unloaded, for 1 or 2 miles (2 or 3 km) at speeds not to exceed 25 mph (40 km/h), to thoroughly circulate lubricant throughout the carrier and housing assemblies.

12.02.04 Dana® Spicer®

IMPORTANT: The use of friction modifiers is not approved in Dana drive axles.

1. Park the vehicle on a level surface, shut down the engine, and set the parking brake. Chock the tires.
2. Clean the fill plug and the area around it. In the axle housing rear cover, remove the plug from the oil fill hole (or stand-pipe, if installed in the oil fill hole). See Fig.58,Axle Housing Drain and Fill Plugs .

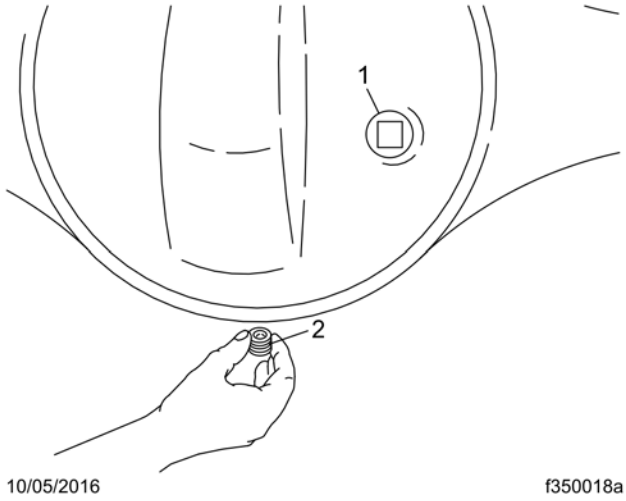

Fig 58, Axle Housing Drain and Fill Plugs

3. Place a drain pan under the rear axle drain plug. See Fig.58,Axle Housing Drain and Fill Plugs Drain the oil at normal operating temperature, 150 to 200°F (65 to 93°C). At this temperature, the oil will run more freely and ensure that the axle is flushed.

NOTE: Some tandem drive axles are equipped with a cylindrical magnetic strainer, located below the lube pump on the front of the power divider cover. All rear axles are fitted with magnetic drain and fill plugs.

4. At each axle oil change, remove and clean the magnetic strainer, if equipped. See Fig. 59,Dana Spicer Tandem Drive Axle Magnetic Strainer

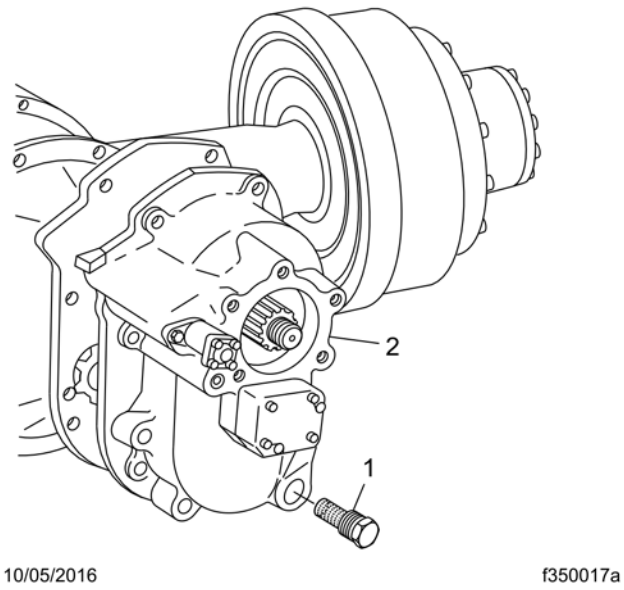

Fig 59, Dana Spicer Tandem Drive Axle Magnetic Strainer

4.a Remove the magnetic strainer from the power divider cover.

WARNING:
Always wear eye protection when using compressed air to clean parts, as flying debris could cause permanent damage to unprotected eyes. Do not point the air stream in the direction of other persons.

4.b Wash the strainer in solvent, and blow it dry with compressed air to remove oil and metal particles.

4.c Install and tighten the magnetic strainer 40 to 60 lbf·ft (54 to 81 N·m).

5. Clean the fill and drain plugs. Change them if necessary.

5.a For magnetic plugs, use a piece of key stock or any other convenient steel slug to short the two magnetic poles and divert the magnetic field.

5.b Clean away the collected material deposited on each pole. Magnets will rapidly lose their effectiveness as collected material bridges the gap between the two poles.

5.c After the first oil is changed, inspect the drain plug each time for large quantities of metal particles.

5.d After cleaning, install the drain plug(s) and tighten to 40 to 60 lbf·ft (54 to 81 N·m).

6. Fill the axle with the recommended lubricant. See Table.26,Dana Spicer Drive Axle Recommended Lubricant for recommended drive axle lubricants, and Table.27,Dana Spicer Drive Axle Lubricant Capacities for drive axle lubricant capacities.

Table 26, Dana Spicer Drive Axle Recommended Lubricant

Dana Spicer Drive Axle Recommended Lubricant		
Lubricant Type	**Condition**	**Lubricant SAE Viscosity Grade**
Dana Spicer Roadranger® Synthetic Drive Axle Lubricants, or Equivalent with Military Specification MIL–L–2105D	Over-the-Road Service	75W–90
	Off-Highway Equipment, or Under Extra Heavy Loads	80W–140

Table 26, Dana Spicer Drive Axle Recommended Lubricant

Table 27, Dana Spicer Drive Axle Lubricant Capacities

Dana Spicer Drive Axle Lubricant Capacities		
Axle Type	**Axle Model**	**Capacity:** [1]Pints (liters)
Single Drive Axle Installation		
Single Reduction	23080S, 23080D	40 (18.9)
	23105S, 23105D	48 (22.7)
Tandem Drive Axle Installation		
	DD404, DD404–P	31 (14.7)[2]
	DS404, DS404–P	39 (18.5)[3]
	DS461–P	43 (20.3)[4]
	DT402, 402–P	34 (16.1)[5]
	DT451–P	39 (18.5)[6]
	DT461–P	
Double Reduction	DP451–P	34 (16.1)[7]
	DP461–P	43 (20.3)[8]

1. Quantities listed are approximate. Fill axle until lubricant is level with bottom of fill hole with vehicle on level ground.
2. Add 2 pints (1 L) of additional lubricant to the power divider.
3. Add 2 pints (1 L) of additional lubricant to the power divider.
4. Add 2 pints (1 L) of additional lubricant to the power divider.
5. Add 2 pints (1 L) of additional lubricant to the power divider.
6. Add 2 pints (1 L) of additional lubricant to the power divider.
7. Add 2 pints (1 L) of additional lubricant to the power divider.
8. Add 2 pints (1 L) of additional lubricant to the power divider.

Table 27, Dana Spicer Drive Axle Lubricant Capacities

6.a Fill the axle through the oil fill hole or standpipe opening. Lubricant should be level with the bottom of the oil fill hole, or the top of the standpipe opening. To check fluid level, see Fig.58,Axle Housing Drain and Fill Plugs

6.b Install and tighten the fill plug 40 to 60 lbf·ft (54 to 81 N·m).

12.02.05 Two-Speed Axles With Shift Unit

Dana Spicer and Meritor

1. Remove the shift unit housing cover. See Fig60,Two-Speed-Axle Shift Unit. Drain and discard the old lubricant. Discard the housing cover gasket.

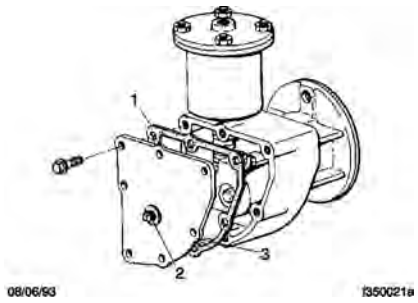

Fig 60, Two-Speed-Axle Shift Unit

2. Thoroughly wash the axle shift parts and housing cover, and allow them to air dry.
3. Install the housing cover and a new cover gasket. Tighten the housing cover capscrews 90 to 110 lbf·in (1017 to 1243 N·cm), then remove the oil fill plug from the cover.

   IMPORTANT: When the ambient temperature is above 0°F (–18°C), use SAE 10 heavy-duty engine oil, API service classification SD (sulfated ash content must not exceed 1.85%). When the ambient temperature is below 0°F (–18°C), use one part kerosene to three parts SAE 10 heavy-duty engine oil, API service classification SD (sulfated ash content must not exceed 1.85%). This cold-weather mixture can be safely used up to 32°F (0°C).

4. Using the recommended lubricant, fill the shift unit housing through the oil fill hole until the lubricant is level with the bottom of the opening. Commercially available automatic transmission fluid may be used in place of SAE 10 engine oil. Automatic transmission fluid can be used for all temperatures; do not mix it with kerosene. To prevent component damage, do not mix engine oil and automatic transmission fluid.
5. Coat the threads of the fill plug with a small amount of Loctite® 242, or equivalent sealant. Install the fill plug finger-tight in the rear axle shift unit housing. Using a wrench, tighten it an additional 1-1/2 turns.

12.03 Axle Breather and Axle Lubricant Level Inspection

12.03.01 Detroit® Model 4 and Model 6

For all axles, including tandem drive axles and two-speed axles, perform the applicable procedures under the heading, 'All Axle Models.' For a two-speed axle with a shift unit, also check the shift unit lubricant; see under the heading, 'Two-Speed Axles With Shift Unit.'

1. Park the vehicle on a level surface, shut down the engine, and set the parking brake. Chock the tires.
2. If the vehicle has just been driven, allow a few minutes for the lubricant to settle.
3. Clean the fill plug and the area surrounding the fill plug on the side of the axle carrier. Remove the plug. Check lubricant level when the axle is cold, or near room temperature.

NOTE: Some Detroit axles have a small tapped and plugged hole near and below the housing oil fill hole. This smaller hole is for a lubricant temperature indicator only, and should not be used as a fill or level hole.

4. Check that the lubricant is level with the bottom of the fill hole. See Fig.61, **Axle Lubricant Level Inspection** If low, check for oil leaks, and correct as needed. Add oil to the level of the fill plug, using the lubricant recommended in Table.28,New Final Drive Oil Capacity, New Final Drive .

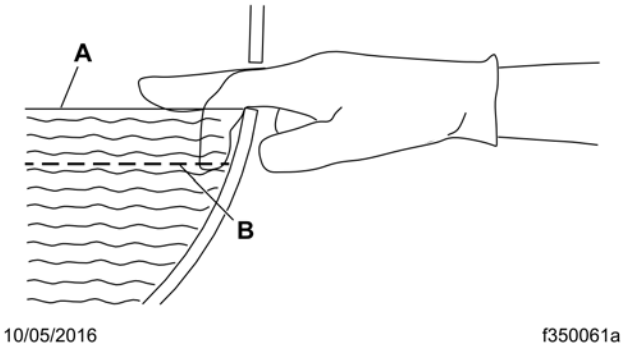

A. Correct (lube level at bottom of fill hole) B. Incorrect (lube level below fill hole)

Fig 61, Axle Lubricant Level Inspection

Table 28, New Final Drive Oil Capacity, New Final Drive

New Final Drive Oil Capacity, New Final Drive		
Axle Type	**Oil in Hubs (2)**	**Oil in Axle**
NFD Model 4 Forward Axle TP	1.8 L	9 L
NFD Model 4 Rear Rear Axle TP	1.8 L	7.5 L
NFD Model 4 Forward Axle SP	1.8 L	14 L
NFD Model 4 Rear Rear Axle SP	1.8 L	11 L
NFD Model 6 TP	1.8 L	9.5 L
NFD Model 6 SP	1.8 L	11 L

Table 28, New Final Drive Oil Capacity, New Final Drive

IMPORTANT: A lubricant level close enough to be seen or touched is not sufficient. It must be level with the bottom of the fill hole.

5. Install and tighten the fill plug 30 lbf·ft (41 N·m).
6. Check the axle housing breather (see Fig.62,Detroit Model 4 and Model 6 Tandem Axle (forward axle shown)). Make sure that it is open and unclogged. If the breather is plugged or damaged, clean or replace it as needed.

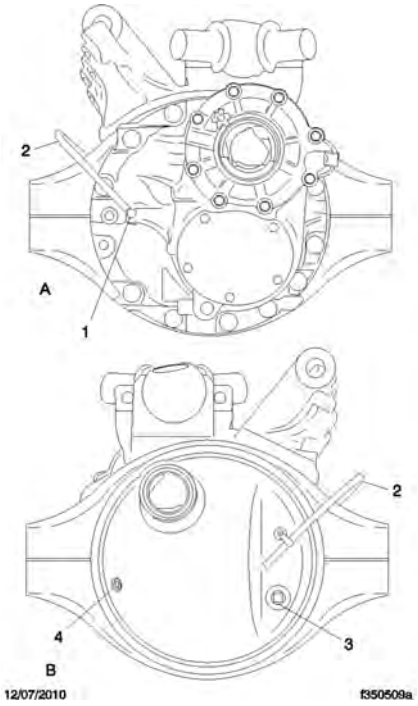

A. Front View
B. Rear View
1. Axle Breather
2. Breather Hose
3. Temperature Sensor Port
4. Oil Fill Plug

Fig 62, Detroit Model 4 and Model 6 Tandem Axle (forward axle shown)

12.03.02 Detroit® New Final Drive

1. Park the vehicle on a level surface, shut down the engine, and set the parking brake. Chock the tires.
2. If the vehicle has just been driven, allow a few minutes for the lubricant to settle.
3. Clean the fill plug and the area surrounding the fill plug on the side of the axle carrier. Remove the plug. Check lubricant level when the axle is cold, or near room temperature.
4. Check that the lubricant is level with the bottom of the fill hole. See Fig.63, **Axle Lubricant Level Inspection**If low, check for oil leaks, and correct as needed. Add oil to the level of the fill plug, using the lubricant recommended in Table.29,New Final Drive Oil Capacity, New Final Drive .

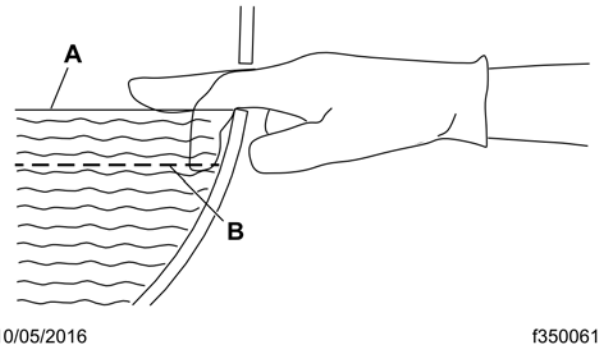

A. Correct (lube level at bottom of fill hole)
B. Incorrect (lube level below fill hole)

Fig 63, Axle Lubricant Level Inspection

Table 29, New Final Drive Oil Capacity, New Final Drive

New Final Drive Oil Capacity, New Final Drive		
Axle Type	**Oil in Hubs (2)**	**Oil in Axle**
NFD Model 4 Forward Axle TP	1.8 L	9 L
NFD Model 4 Rear Rear Axle TP	1.8 L	7.5 L
NFD Model 4 Forward Axle SP	1.8 L	14 L
NFD Model 4 Rear Rear Axle SP	1.8 L	11 L
NFD Model 6 TP	1.8 L	9.5 L
NFD Model 6 SP	1.8 L	11 L

Table 29, New Final Drive Oil Capacity, New Final Drive

IMPORTANT: A lubricant level close enough to be seen or touched is not sufficient. It must be level with the bottom of the fill hole.

5. Install and tighten the fill plug 30 lbf·ft (41 N·m).

IMPORTANT: Always check the axle breather whenever checking the lubricant level. Check the breather more frequently under adverse operating conditions.

6. Check the axle housing breather. See Fig.64,Detroit Model 4 and Model 6 Tandem Axle (forward axle shown). Make sure that it is open and unclogged. If the breather is plugged or damaged, clean or replace it as needed.

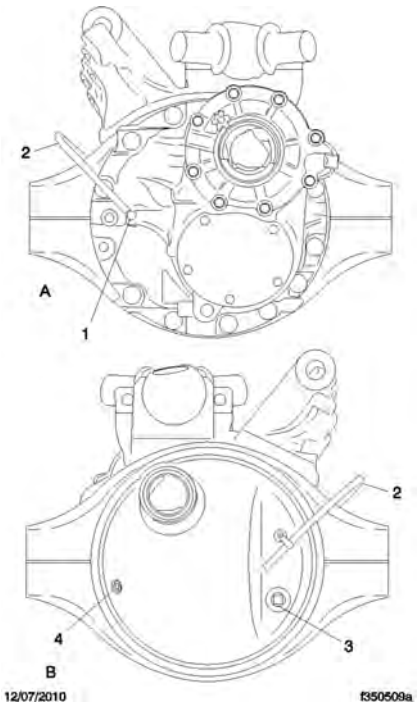

A. Front View
B. Rear View
1. Axle Breather
2. Breather Hose
3. Temperature Sensor Port
4. Oil Fill Plug

Fig 64, Detroit Model 4 and Model 6 Tandem Axle (forward axle shown)

12.03.03 Meritor®

NOTICE:
Failure to keep the rear axle filled to the proper level with the recommended lubricant can result in rear axle damage.

NOTICE:
When operating under adverse conditions, it may be necessary to change the axle lubricant at more frequent intervals than listed in the scheduled maintenance tables. Failure to do so could result in axle damage.

1. Park the vehicle on a level surface, shut down the engine, and set the parking brake. Chock the tires.

IMPORTANT: Oil level must be checked at each M1 interval on Meritor axles.

2. Clean the fill plug and the area surrounding the fill plug on the side of the axle carrier. Remove the plug. Check the lubricant level when the axle is cold, or near room temperature.

   NOTE: Some Meritor axles have a small tapped and plugged hole near and below the housing oil fill hole. This smaller hole is for a lubricant temperature indicator only, and should not be used as a fill or level hole.

3. Check that the lubricant is level with the bottom of the fill hole. See Fig.65, **Axle Lubricant Level Inspection** If low, check for oil leaks, and correct as needed. Add oil to the level of the fill plug, using the lubricant recommended in Table.30,Meritor Drive Axle Recommended Lubricant.

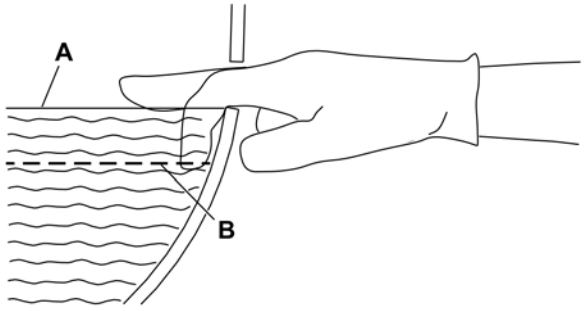

A. Correct (lube level at bottom of fill hole) B. Incorrect (lube level below fill hole)

Fig 65, Axle Lubricant Level Inspection

Table 30, Meritor Drive Axle Recommended Lubricant

Meritor Drive Axle Recommended Lubricant			
Recommended Lubricant Type	**Ambient Temperature**	**Lubricant SAE Viscosity Grade**	**Meritor Specification**
Synthetic Gear Oil	–40°F (–40°C) and Up[1]	75W–90	0–76–N

1. *There is no upper limit on these outside temperatures, but axle sump temperature must never exceed 250°F (121°C).

Table 30, Meritor Drive Axle Recommended Lubricant

4. Install and tighten the fill plug 35 lbf·ft (47 N·m).
5. Check the axle housing breather. Make sure that it is open and unclogged. See Fig. 66, **Meritor Axle Housing Breathers** If the breather is plugged or damaged, clean or replace it as needed.

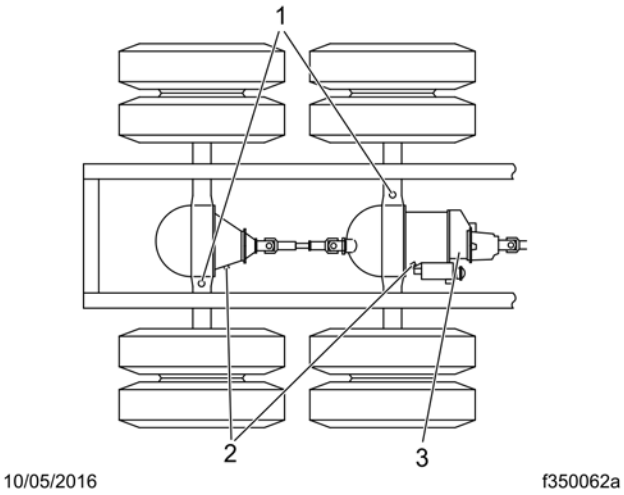

1. Axle Housing Breathers
2. Carrier Oil Fill Plugs
3. Interaxle Differential

Fig 66, Meritor Axle Housing Breathers

6. On non-drive axles using oil-lubricated wheel bearings, check the oil level at the wheels, and add oil if low. Use the same lubricant recommended for the drive axle.

12.03.04 Dana® Spicer®

NOTE: When adding to or checking the oil level, make certain the hub cap and plug are clean before removing the plug; this will minimize the possibility of dirt and road grime entering the assembly.

NOTICE:
Failure to keep the rear axle filled to the proper level with the recommended lubricant can result in rear axle damage.

1. Park the vehicle on a level surface, shut down the engine, and set the parking brake. Chock the tires.
2. If the vehicle has just been driven, allow a few minutes for the lubricant to settle.
3. Clean the oil fill plug and the area surrounding it; see Fig.67, **Meritor Axle Housing Breathers**. Remove the plug from the fill hole (or standpipe, if installed in the oil fill hole).

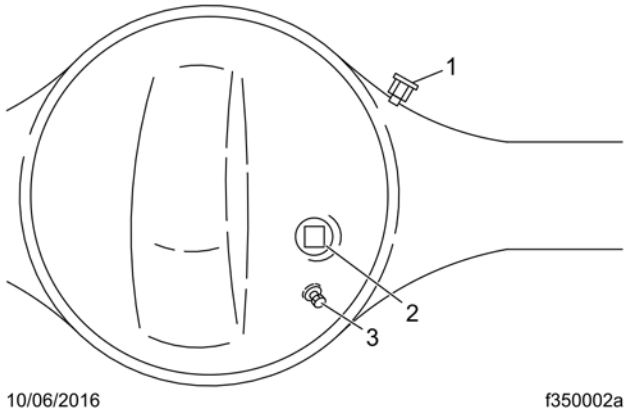

1. Axle Housing Breather
2. Fill Plug
3. Temperature Indicator Plug

Fig 67, Meritor Axle Housing Breathers

IMPORTANT: A lubricant level close enough to be seen or touched is not sufficient. It must be level with the bottom of the fill hole, or the top of the standpipe opening.

4. Check that the lubricant is level with the bottom of the fill hole, or with the top of the standpipe opening. See Fig. 68, **Axle Lubricant Level Inspection**. If low, check for oil leaks, and correct as needed. Add oil to the level of the fill plug, using the lubricant recommended in Table.31,Dana Spicer Drive Axle Recommended Lubricant.

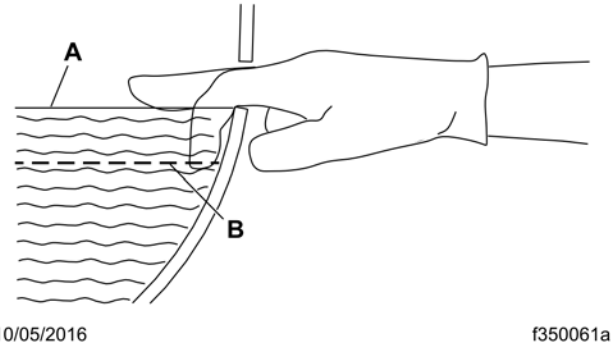

A. Correct (lube level at bottom of fill hole)
B. Incorrect (lube level below fill hole)

Fig 68, Axle Lubricant Level Inspection

Table 31, Dana Spicer Drive Axle Recommended Lubricant

Dana Spicer Drive Axle Recommended Lubricant		
Lubricant Type	**Condition**	**Lubricant SAE Viscosity Grade**
Dana Spicer Roadranger® Synthetic Drive Axle Lubricants, or Equivalent with Military Specification MIL–L–2105D	Over-the-Road Service	75W–90

	Off-Highway Equipment, or Under Extra Heavy Loads	80W–140

Table 31, Dana Spicer Drive Axle Recommended Lubricant

5. Install and tighten the fill plug 40 to 60 lbf·ft (54 to 81 N·m).

IMPORTANT: Always check the axle breather whenever checking the lubricant level. Check the breather more frequently under adverse operating conditions.

6. Check the axle housing breather. Make sure that it is unclogged and free from corrosion. See Fig. 67, **Meritor Axle Housing Breathers**. If the breather is plugged or damaged, clean or replace it as needed.

12.03.05 Two-Speed Axles With Shift Unit

IMPORTANT: Also do the appropriate procedure under the heading "All Axle Models."

NOTICE:
Failure to keep lubricant at the specified level could cause damage to the axle shift unit.

1. Clean the shift unit oil fill plug, and the area surrounding the plug. See Fig.69,Two-Speed-Axle Shift Unit. Turn the fill plug counterclockwise to remove it.

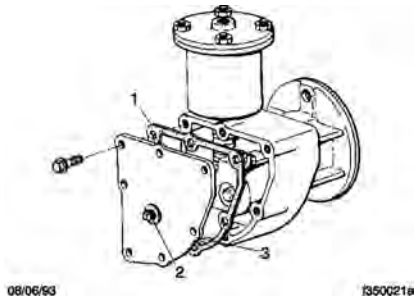

Fig 69, Two-Speed-Axle Shift Unit

2. Insert a finger or pipe cleaner into the fill plug hole and check the fluid level. The lubricant should be level with the bottom of the fill hole. If low, add the recommended lubricant.
3. Coat the threads of the fill plug with a small amount of Loctite® 242, or equivalent sealant. Install the fill plug finger-tight in the rear axle shift unit housing. Using a wrench, tighten it an additional 1-1/2 turns.

13.01 Wheel Nut Check 110
13.02 Tire Check 110

13. Wheels and Tires

13.01 Wheel Nut Check

IMPORTANT: After a wheel has been installed, the wheel nut torque must be checked after 50 to 100 miles (80 to 160 km) of operation.

Check the torque on all wheel nuts. See Table.32,Disc Wheel Fastener Torque for torque specifications, and see Fig. 70,Wheel Nut Tightening Sequence for the wheel nut tightening sequence.

NOTE: Torque values are given for lubricated threads. Apply two drops of SAE 30W oil to a point between the nuts and flanges.

NOTICE:

Insufficient wheel nut torque can cause wheel shimmy, resulting in wheel damage, stud breakage, and extreme tire tread wear. Excessive wheel nut torque can break studs, damage threads, and crack discs in the stud hole area. Use the recommended torque values, and follow the tightening sequence shown in Fig.70,, page 110

Table 32, Disc Wheel Fastener Torque

Disc Wheel Fastener Torque	
Nut Size	**Torque: lbf·ft (N·m) Oiled**
M22 x 1.5	450–500 (610–678)
NOTE: If using specialty fasteners, consult the manufacturer for recommended torque levels.	

Table 32, Disc Wheel Fastener Torque

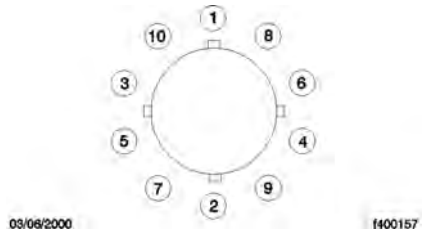

Fig 70, Wheel Nut Tightening Sequence

13.02 Tire Check

Tires should be inspected closely during the first 3000 to 10,000 miles (5000 to 16 000 km) for abnormal wear.

Maintain the proper pressures for carried loads, per the tire manufacturers' recommendations, or the tire pressure label on the driver's door.

Have the wheel alignment checked after the first 10,000 miles (16 000 km), then every 40,000 miles (60 000 km) thereafter.

Do not continue to drive the vehicle if tires develop any of the following:

- blisters;
- cuts or punctures that reach to the cord;
- a nail, screw, rock, or other puncturing object;
- flat spots or irregular wear;
- tread worn to a minimum depth;
- inability to maintain proper tire pressure.

14.01 Safety Precautions 114
14.02 Inspection of the Driveline 114
14.03 Driveline Lubrication 119
14.03.01 Lubrication of the Universal Joint 119
14.03.02 Lubrication of the Slip Joint Spline 121

14. Driveline

14.01 Safety Precautions

Safety precautions in this section apply to all procedures within this group.

NOTE: When working on the vehicle, shut down the engine or motor, set the parking brake, and chock the tires. Before working under the vehicle, always place jack stands under the frame rails to ensure the vehicle cannot drop. Failure to follow these steps could result in serious personal injury or death.

14.02 Inspection of the Driveline

1. Park the vehicle on a level surface, shut down the engine, and apply the parking brake. Chock the tires.



NOTICE:

Due to the extreme load occurring at high-speed rotation, a loose or broken capscrew at any point in the driveline will weaken the driveline connection, which could eventually result in serious vehicle damage. Tighten bearing-cap capscrews or yoke-strap capscrews to the specified torque, being careful to not overtighten.

2. Tighten the U-joint capscrews. See Table.33,U-Joint Torque Specifications for torque specifications.

Table 33, U-Joint Torque Specifications

U-Joint Torque Specifications		
Type	**Torque**	**FigureFigure**
U-joints with bearing caps	43 lbf·ft (58 N·m)	Fig. 71,Meritor U-Joint Fasteners for Bearing Caps.
Meritor RPL U-joints (except RPL35)	125 lbf·ft (169 N·m)	Fig. 72,Meritor RPL Series U-Joint, Except RPL35.
Meritor RPL35 U-joints	150 lbf·ft (203 N·m)	Fig.74,Meritor RPL35 Series U-Joint.
U-joints with yoke straps	125 lbf·ft (169 N·m)	Fig.73,Components of a Basic Driveline

Table 33, U-Joint Torque Specifications

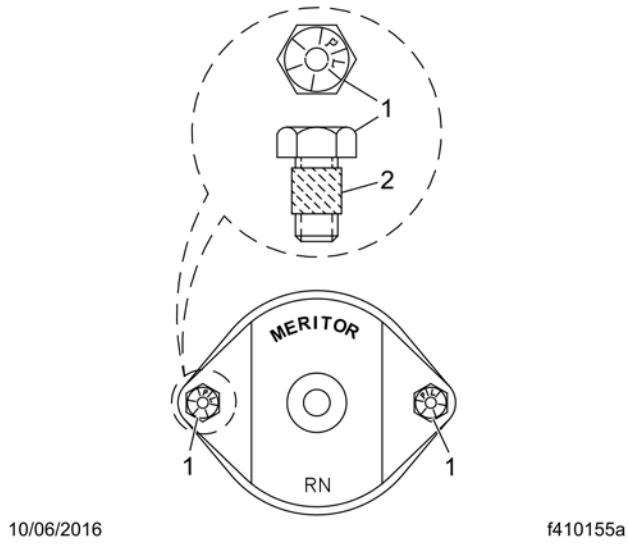

1. Self-Locking Capscrew
2. Adhesive Band

Fig 71, Meritor U-Joint Fasteners for Bearing Caps

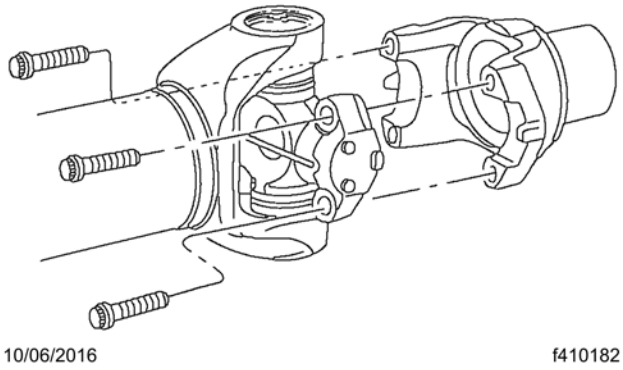

Fig 72, Meritor RPL Series U-Joint, Except RPL35

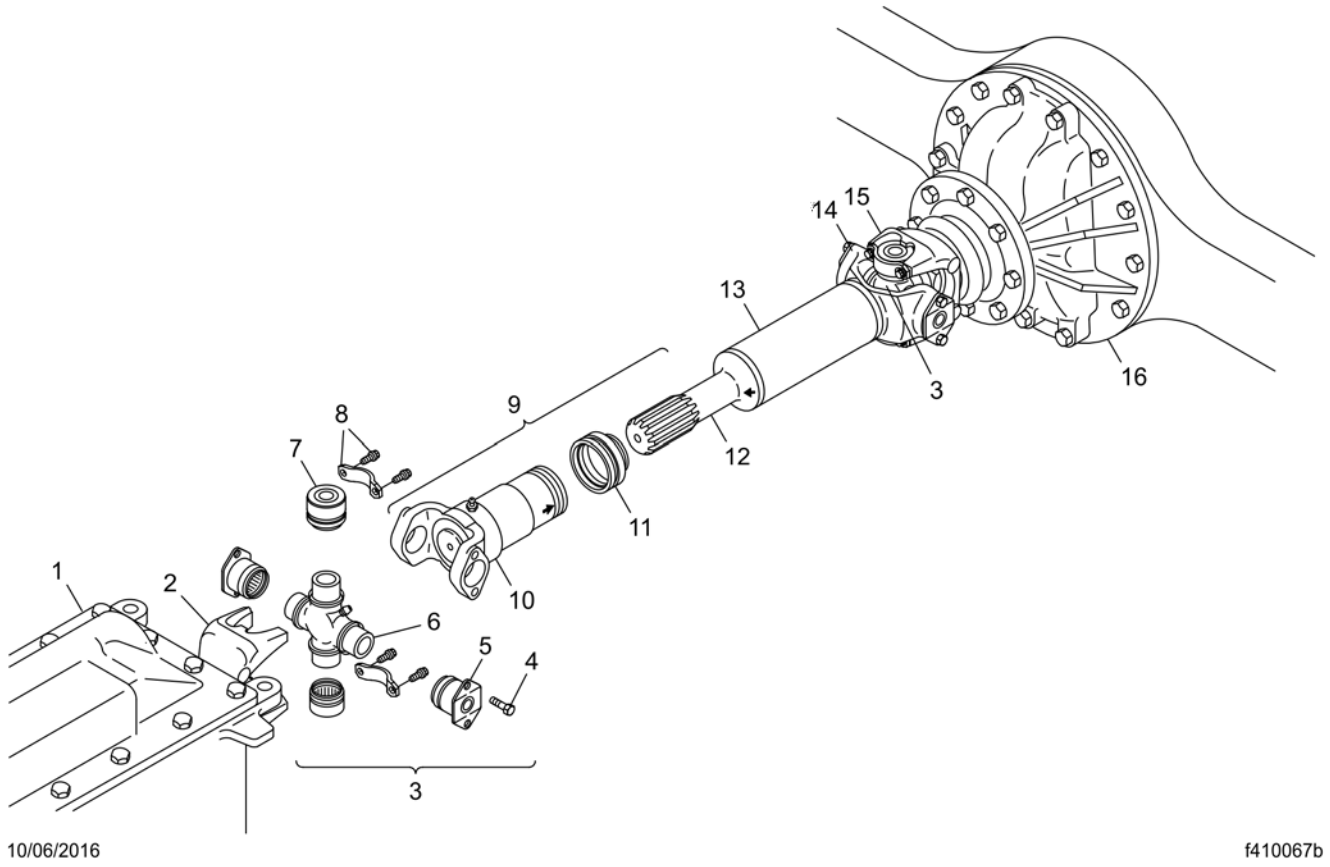

NOTE: All fasteners are not shown.

1. Transmission
2. Transmission Output-Shaft End-Yoke (yoke-strap type)
3. U-Joint Assembly
4. Bearing Cap Self-Locking Capscrew
5. Bearing Cap
6. U-Joint Cross
7. Bearing Cup (for yoke strap)
8. Yoke Strap and Capscrew
9. Slip-Joint Assembly
10. Sleeve-Yoke (bearing-cap type)
11. Dust Cap
12. Splined Stub Shaft
13. Driveshaft Tube
14. Tube-Yoke (bearing-cap type)
15. Axle Input-Shaft End-Yoke (yoke-strap type)
16. Rear Axle

Fig 73, Components of a Basic Driveline

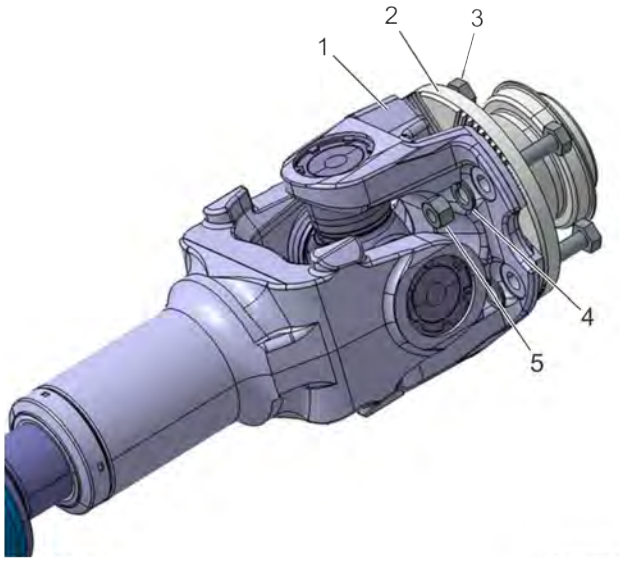

1. Yoke
2. Input Flange
3. Bolt
4. Washer
5. Nut

Fig 74, Meritor RPL35 Series U-Joint

3. Check the driveline yokes or flanges for cracks, and check end-yokes for looseness. See Fig. 73,Components of a Basic Driveline.

   Replace cracked yokes and flanges.

   If any end-yoke can be moved in or out on its shaft, or can be rocked on its shaft, disconnect the driveshaft and U-joint from the yoke, then check the drive component's shaft seal for leakage or other visible damage that may have been caused by the loose yoke. Replace the seal if needed, then tighten the yoke nut. See of the **57X Workshop Manual** for torque specifications. If the yoke is still loose after tightening the yoke nut, replace the end-yoke and yoke nut.

   Replace the prevailing torque locknut (end-yoke nut) if it was removed for yoke replacement, seal replacement, or any other reason.

   NOTE: Meritor RPL35 driveshafts are not serviceable. If the U-joint is worn, replace the driveshaft assembly.

4. Check U-joint assemblies for wear by moving the driveshaft up and down, and from side to side. If any movement of the U-joint cross in the bearings can be felt or seen, replace the U-joint assembly.
5. Check if the midship bearing and mounting are loose or have deteriorated, by attempting to move the driveshaft up and down, and from side to side. If the bearing is loose on its shaft, or rattles, replace it. If the bearing mount is loose on the frame, tighten the mounting fasteners to the proper torque value. See of the **57X Workshop Manual** for torque specifications. Replace the midship bearing assembly if the rubber cushion is deteriorated or oil-soaked.
6. Check slip joints for spline wear by moving the sleeve-yoke and splined shaft back and forth. See Fig. 75,Slip Joint Spline Wear Checking. If the slip joint can be twisted in a clockwise, or counterclockwise movement greater than 0.007 inch (0.18 mm), replace both the sleeve-yoke and the splined shaft.

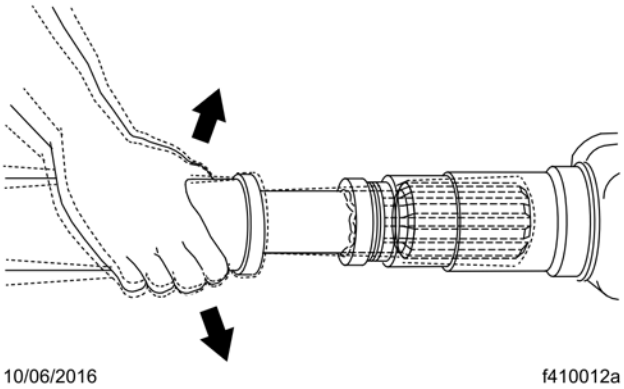

NOTE: Attempt to move the sleeve-yoke and splined shaft back and forth.

Fig 75, Slip Joint Spline Wear Checking

7. Visually examine the driveshaft tubes for dents, bends, twists, or other damage. If any tube appears to be damaged, see of the **57X Workshop Manual** for repair and replacement instructions.
8. Examine the driveshaft for evidence of missing balance weights, and for buildup of foreign material. Remove any foreign material. If there is any evidence that balance weights are missing, remove the driveshaft and have it balanced.
9. For driveshafts with slip joints, check to be sure the yoke plug is not loose or missing. See Fig. 76,Slip Joint and U-Joint Lubrication. Repair or replace the yoke plug as needed. If the yoke plug is missing, the splined shaft may be hitting the plug and knocking it out; contact your Regional Service Office for assistance in determining the correct driveshaft length.

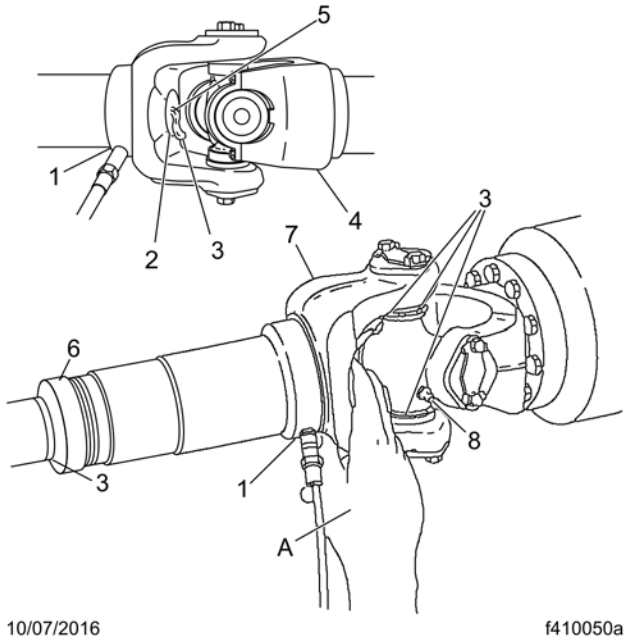

A. After grease appears, cover the pressure-relief hole while continuing to lubricate.
1. Slip Joint Grease Fitting (with grease gun attached)
2. Yoke Plug
3. Grease
4. Half-Round Yoke
5. Yoke Plug Pressure-Relief Hole
6. Slip Joint Seal
7. Full-Round Yoke
8. U-Joint Grease Fitting

Fig 76, Slip Joint and U-Joint Lubrication

14.03 Driveline Lubrication

14.03.01 Lubrication of the Universal Joint

NOTE: Vehicles equipped with Meritor RPL Series drivelines do not require periodic lubrication.

1. Park the vehicle on a level surface, shut down the engine, and apply the parking brake. Chock the tires.
2. Wipe all old grease and dirt from each U-joint grease fitting. See Fig.77,Slip Joint and U-Joint Lubrication.

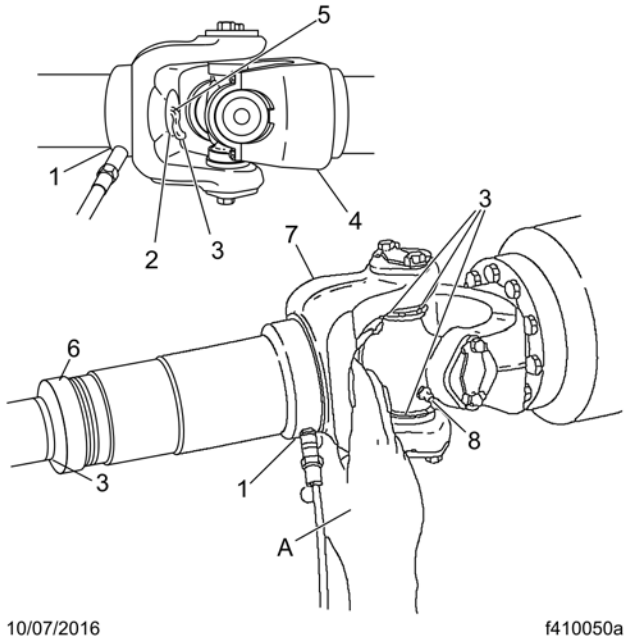

A. After grease appears, cover the pressure-relief hole while continuing to lubricate.
1. Slip Joint Grease Fitting (with grease gun attached)
2. Yoke Plug
3. Grease
4. Half-Round Yoke
5. Yoke Plug Pressure-Relief Hole
6. Slip Joint Seal
7. Full-Round Yoke
8. U-Joint Grease Fitting

Fig 77, Slip Joint and U-Joint Lubrication

3. Use a hand-type grease gun, or a high-pressure gun with a low-pressure adaptor, to lubricate U-joints. If a low-pressure adaptor is not used, U-joints may not receive enough grease.

   Using lithium 12-Hydroxy stearate grease (NLGI Grade 2, with EP additives), lubricate until **new** grease can be seen at **all four** U-joint seals. Fresh grease must be seen escaping from **all four** bearing-cap seals of each U-joint. On full-round yokes equipped with a bearing cup, if most of the grease being added to a U-joint can be seen escaping from just one of the U-joint seals, check the torque on the capscrews at that seal.

4. Tighten the bearing-cup capscrews 43 lbf·ft (58 N·m). If the capscrews were already tight, or all of the U-joint seals still do not purge, remove the bearing cup at that seal, and examine the seal for damage. If the seal is damaged, replace the complete U-joint.

5. If grease does not appear at one seal, use a prying tool to pry the U-joint trunnion away from the non-purging seal, or tap the driveshaft or yoke with a plastic or rawhide mallet on the side opposite the dry seal, while continuing to lubricate. If grease still does not appear, loosen the capscrews at the bearing with the dry seal, to relieve seal tension. Lubricate the U-joint until new grease is seen at the seal, then tighten the capscrews to the correct torque specifications. If the bearing will not take grease, replace the U-joint. See of the **57X Workshop Manual** for replacement instructions.

6. Check the purged grease. If it appears rusty, gritty, or burned, replace the U-joint.

7. Wipe the purged grease from the seals, and any excess grease from the grease fitting.

14.03.02 Lubrication of the Slip Joint Spline

NOTE: Vehicles equipped with Meritor RPL Series drivelines do not require periodic lubrication.

1. If equipped with a grease fitting, wipe all old grease and dirt from the slip joint grease fitting. See Fig. 78,Slip Joint and U-Joint Lubrication.

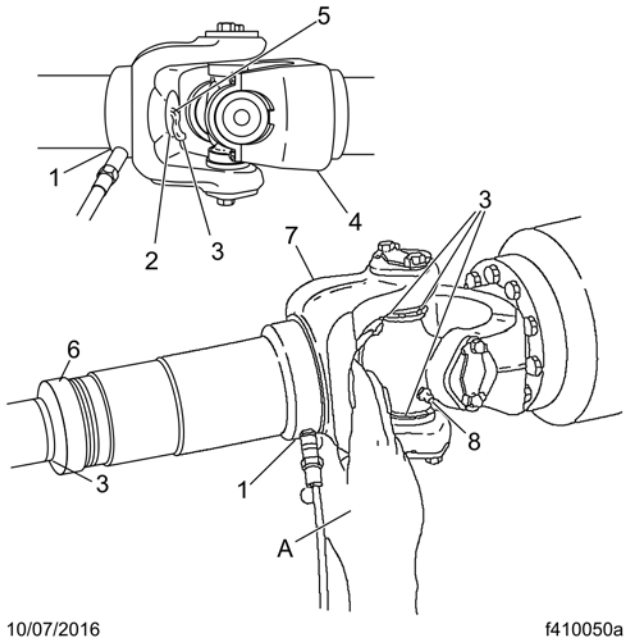

A. After grease appears, cover the pressure-relief hole while continuing to lubricate.
1. Slip Joint Grease Fitting (with grease gun attached)
2. Yoke Plug
3. Grease
4. Half-Round Yoke
5. Yoke Plug Pressure-Relief Hole
6. Slip Joint Seal
7. Full-Round Yoke
8. U-Joint Grease Fitting

Fig 78, Slip Joint and U-Joint Lubrication

2. Use a hand-type grease gun or a high-pressure gun with a low-pressure adaptor, to lubricate the slip joint. Add multi-purpose chassis grease (lithium 12-hydroxy stearate, NLGI Grade 2, with EP additives) until it appears at the pressure-relief hole in the yoke plug. Then cover the relief hole with your finger, while continuing to apply gun pressure until new grease appears at the slip joint seal. See Fig.78,Slip Joint and U-Joint Lubrication. This ensures complete lubrication of the splines.
3. Wipe the purged grease from the pressure-relief hole and slip joint seal, and any excess grease from the grease fitting.

15.01 Safety Precautions 124
15.02 Inspection of the Air Brake System Valve 124
15.03 Bendix Air Dryer Desiccant Replacement 124
15.03.01 AD–9 124
15.03.02 AD–IP 128
15.03.03 AD-9si and AD–IS 129
15.04 Inspection of the Air Dryer 129
15.05 Alcohol Evaporator Cleaning and Inspection 131
15.05.01 General Information 131
15.06 Brake Inspection 131
15.06.01 Parking Brake Operational Check 131
15.06.02 Brake Component Inspection 131
15.07 Haldex Slack Adjuster Lubrication 138
15.08 Meritor Camshaft Bracket Lubrication 140
15.08.01 General Information 140
15.08.02 Greasing the Steer Axle S-cam Tube 140
15.08.03 Greasing the Drive Axle S-cam Tube 140
15.09 Meritor Slack Adjuster Lubrication 141
15.09.01 General Information 141
15.09.02 Steer Axle Slack Adjuster Greasing 142
15.09.03 Greasing the Drive Axle Slack Adjuster 142
15.10 Inspection and Lubrication of the Bendix E-6 Foot Control Valve 143
15.11 Replacement of the WABCO System Saver Air Dryer Desiccant Cartridge 144
15.12 Versajust Slack Adjuster Inspection and Lubrication 145
15.12.01 General Information 145

15. Brakes

15.01 Safety Precautions

Safety Precautions in this section apply to all procedures within this group.

DANGER:

When working on the vehicle, shut down the engine or motor, set the parking brake, and chock the tires. Before working under the vehicle, always place jack stands under the frame rails to ensure the vehicle cannot drop. Failure to follow these steps could result in serious personal injury or death.

15.02 Inspection of the Air Brake System Valve

NOTE: There is no scheduled air valve maintenance on vehicles equipped with Bendix air valves and a Bendix air dryer if the air dryer desiccant is replaced at 350,000 miles (563 150 km). If the desiccant is not changed at 350,000 miles (563 150 km), or if the vehicle is equipped with another air dryer, maintenance will have to be performed to the air brake valves. See of the **57X Workshop Manual** for procedures.

IMPORTANT: For vehicles equipped with an oil-coalescing air dryer desiccant cartridge, replace the cartridge once a year, regardless of mileage.

15.03 Bendix Air Dryer Desiccant Replacement

15.03.01 AD–9

IMPORTANT: For vehicles equipped with an oil-coalescing air dryer desiccant cartridge, replace the cartridge once a year, regardless of mileage.

1. Park the vehicle on a level surface, shut down the engine, and apply the parking brake. Chock the tires.
2. Completely drain all air reservoirs. Air pressure gauges should read 0 psi (0 kPa).

   NOTE: The compressor discharge line may still contain residual air pressure, open the line slowly.

3. Identify, tag, and disconnect the three air lines from the end cover.
4. Disconnect the harness connector from the heater and thermostat assembly.
5. Loosen the bolt that secures the upper mounting bracket strap.
6. Remove the two bolts and Nylok® nuts that secure the air dryer to the lower mounting bracket. Mark the position of the mounting bracket to the end cover and mark the bolts to ease installation.
7. Remove the upper mounting bracket strap fasteners, then remove the strap and the air dryer.
8. Place the air dryer on a bench and remove the remaining 6 bolts, 12 washers, 6 Nylok nuts, and the air dryer housing. See Fig.79,AD–9 Air Dryer (exploded view). Discard the Nylok nuts. Remove the end-cover-to-housing O-ring.

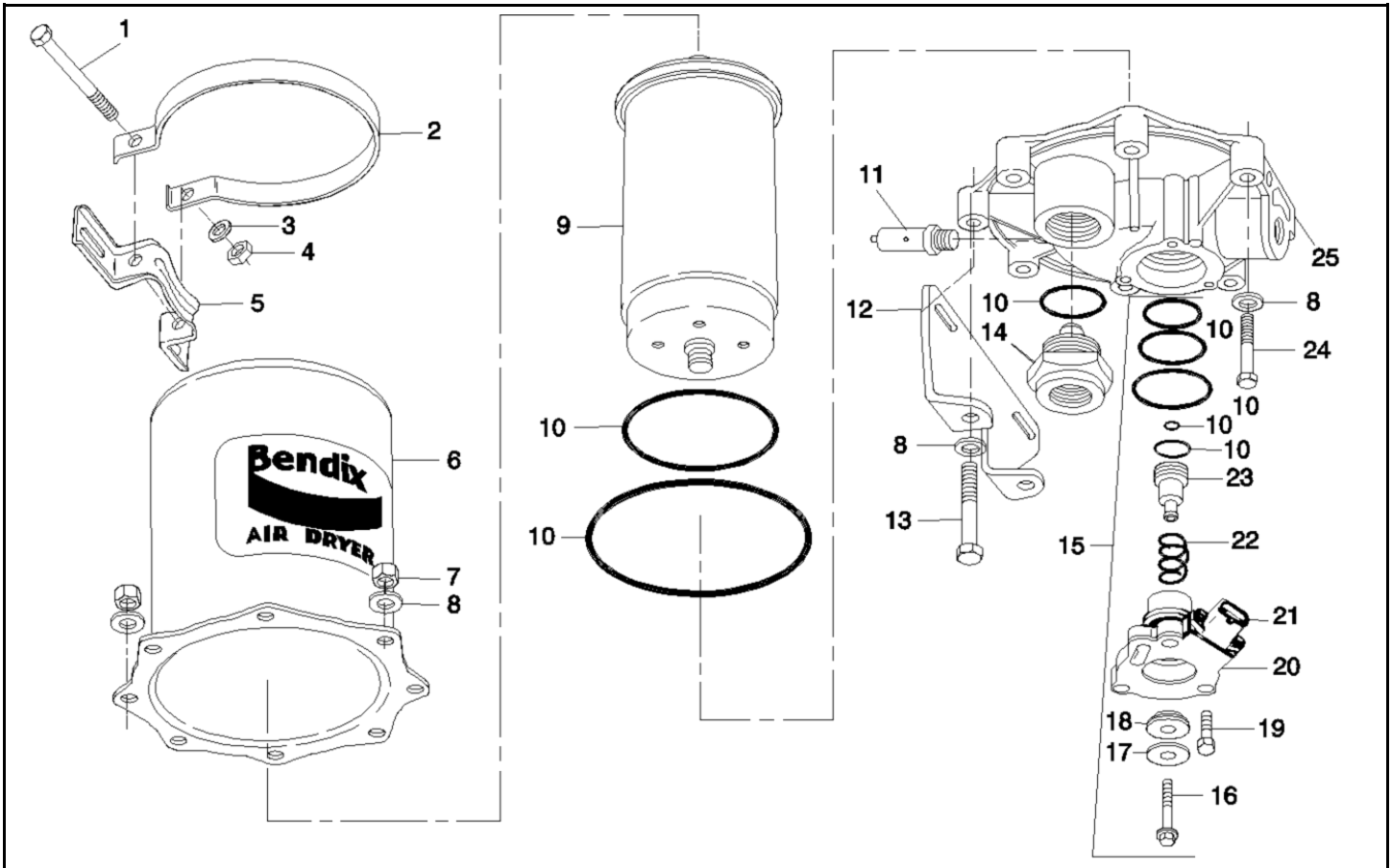

1. 5/16 x 4-1/2 Upper Mounting Bracket Bolt
2. Upper Mounting Bracket Strap
3. Lockwasher
4. 5/16-Inch Nylok Nut
5. Upper Mounting Bracket
6. Housing
7. Nylok Nut
8. 3/8-Inch Special Washer
9. Desiccant Cartridge
10. O-Ring
11. Safety Valve
12. Lower Mounting Bracket
13. 3/8-Inch Bolt (long)
14. Check Valve Assembly
15. Purge Valve Assembly
16. Purge Valve Capscrew
17. Exhaust Diaphragm
18. Purge Valve
19. 1/4-Inch Tapping Screw
20. Purge Valve Housing
21. Heater and Thermostat Housing
22. Return Spring
23. Purge Piston
24. 3/8-Inch Bolt
25. End Cover

Fig 79, AD–9 Air Dryer (exploded view)

9. Clamp the desiccant cartridge in a vise.

WARNING:
Clamping the end cover or housing in a vise could seriously compromise the air dryer's ability to hold air pressure, which could cause a failure in the brake system, resulting in property damage, personal injury, or death.

10. Twist the end cover counterclockwise to release the cartridge from the end cover. Rotate the end cover until it completely separates from the desiccant cartridge.

NOTICE:
Dirt or obstructions in the O-ring grooves can cause an O-ring failure that will result in an air leak.

NOTE: A substantial torque, up to 50 lbf·ft (68 N·m), may be necessary to remove the desiccant cartridge.

11. Inspect the condition of the O-ring seals. If they are cracked, crimped, or otherwise damaged, replace them to ensure an airtight seal. Clean the O-ring grooves of any dirt or obstruction.
12. Lubricate the O-rings with silicone or lithium grease and install them in the end cover.
13. Install the desiccant cartridge on the end cover. Turn the cartridge clockwise until the desiccant cartridge makes contact with the end cover.
14. Place the desiccant cartridge in a vise, and turn the end cover clockwise an additional 180 to 225 degrees to fully tighten the desiccant cartridge to the end cover.

NOTE: Desiccant cartridge torque should not exceed 50 lbf·ft (68 N·m).

15. Place the housing over the desiccant cartridge and align the mounting holes with the end cover.

IMPORTANT: Replace, do not reuse the Nylok nuts on the air dryer cover.

16. Install the 6 bolts, 12 washers, and 6 new Nylok nuts. Torque the Nylok nuts in a star pattern 17 to 24 lbf·ft (23 to 33 N·m). See Fig.80,AD–9 End Cover to Housing Torque Pattern.

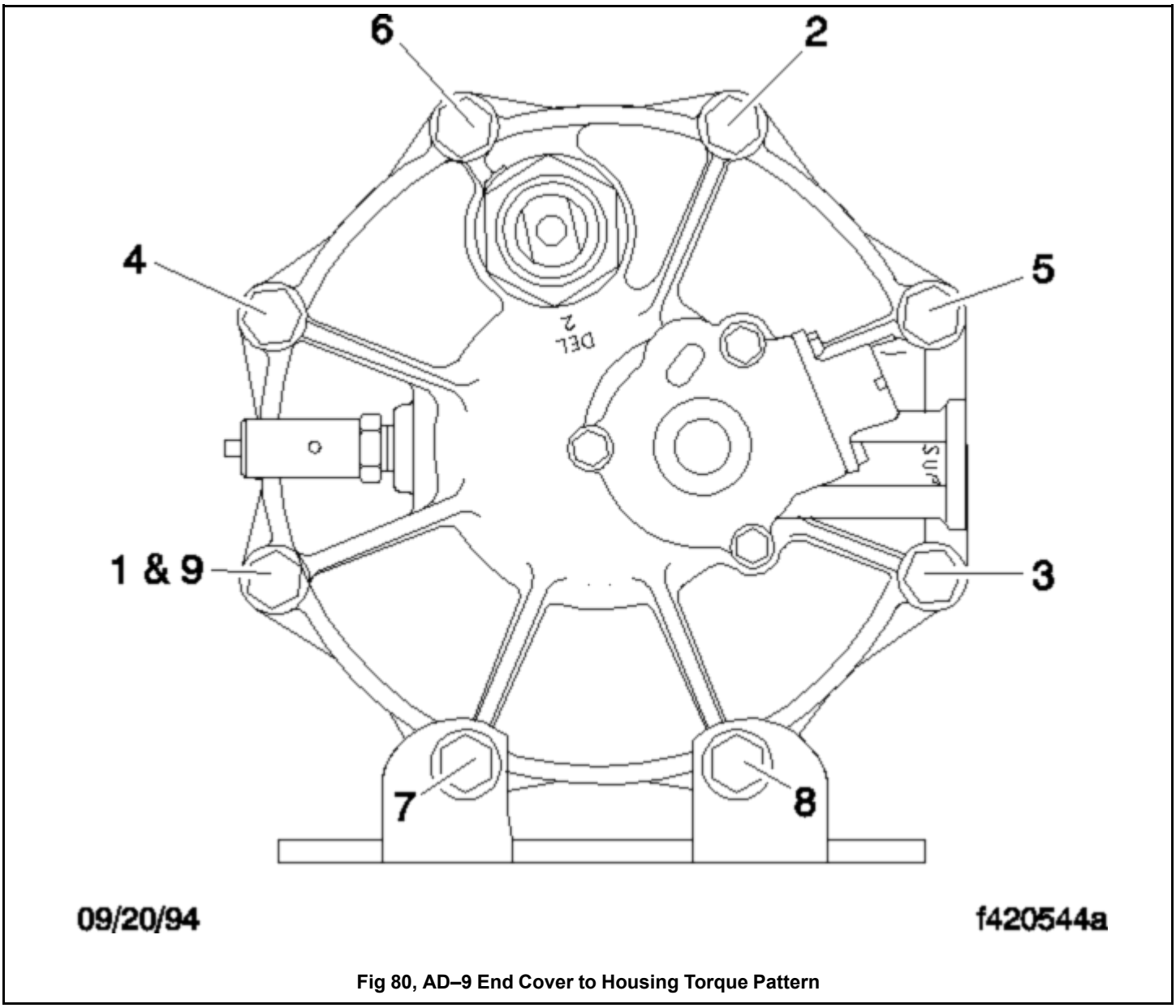

Fig 80, AD–9 End Cover to Housing Torque Pattern

17. Install the air dryer on the lower mounting bracket. Install the two previously marked bolts, four washers, and two new Nylok nuts. Torque the two remaining Nylok nuts 17 to 24 lbf·ft (23 to 33 N·m). Install the bolt, two washers, and a new Nylok nut in the upper mounting bracket strap. Torque the upper mounting bracket strap Nylok nut 80 to 120 lbf·in (904 to 1356 N·cm).
18. Connect and tighten the three air lines. Connect the harness connector to the heater and thermostat assembly until the lock tab snaps in place.
19. Start the engine, build the air pressure, and check the air brake system for leaks. If any air leaks are present, see of the vehicle **Workshop Manual** for diagnosis and repair information.

15.03.02 AD–IP

IMPORTANT: For vehicles equipped with an oil-coalescing air dryer desiccant cartridge, replace the cartridge once a year, regardless of mileage.

1. Park the vehicle on a level surface, shut down the engine, and apply the parking brake. Chock the tires.
2. Using a wrench or a socket, loosen the desiccant cartridge bolt. Then separate the desiccant cartridge from the end cover.
3. Pull the cartridge bolt out of the cover and remove the cartridge.

WARNING:
Do not attempt to disassemble the desiccant cartridge assembly. Parts for the assembly are not available and the cartridge contains a 150 lb spring that cannot be mechanically caged. Disassembly could release the spring, resulting in personal injury.

4. Remove and discard both O-rings from the cartridge bolt.
5. Using a clean rag, wipe clean the inside of the end cover. Clean the cartridge bolt bore in the end cover, and the sealing surfaces for the large- and small-diameter desiccant cartridge sealing rings.
6. Inspect the end cover for physical damage, then inspect all air line fittings for corrosion; replace as necessary.
7. Clean and inspect the bolt, paying attention to the threads and O-ring grooves.

IMPORTANT: Use only the grease supplied with Bendix replacement kits.

8. Lubricate the O-rings, bolt O-ring grooves, sealing rings, and cartridge grooves. Lubricate the end cover bore for the bolt.
9. Install both O-rings on the cartridge bolt, then, using a twisting motion, insert the assembled desiccant cartridge bolt in the end cover.
10. Install the desiccant cartridge on the end cover, making sure the cartridge is properly seated and flush on the end cover.

NOTE: It may be necessary to rotate the cartridge slightly until the anti-rotation lugs are properly aligned and allow the cartridge to rest flush against the end cover.

11. Using a wrench or socket, tighten the desiccant cartridge bolt 70 lbf·ft (95 N·m). **Do not** over-torque.
12. Before placing the vehicle in service, perform the test below.
    - 12.a Close all reservoir drain cocks.
    - 12.b Build system pressure to governor cut-out, and note that the AD-IP air dryer purges with an audible escape of air.
    - 12.c Fan the service brakes to reduce system air pressure to governor cut-in. Note that the system once again builds to full pressure and is followed by a purge at the AD-IP air dryer exhaust.

12.d Check for excessive leakage around the head of the desiccant cartridge where it contacts the end cover. With the compressor in loaded mode (compressing air), apply a soapy solution to these areas, and observe that any leakage does not exceed a 1-inch bubble in 1 second. If leakage exceeds this measure, remove and re-install the desiccant cartridge.

15.03.03 AD-9si and AD–IS

IMPORTANT: For vehicles equipped with an oil-coalescing air dryer desiccant cartridge, replace the cartridge once a year, regardless of mileage.

1. Park the vehicle on a level surface, shut down the engine, and apply the parking brake. Chock the tires.
2. Drain the air reservoirs.
3. Using a strap wrench or equivalent, loosen the desiccant cartridge. Spin the cartridge off by hand and discard it. See Fig..

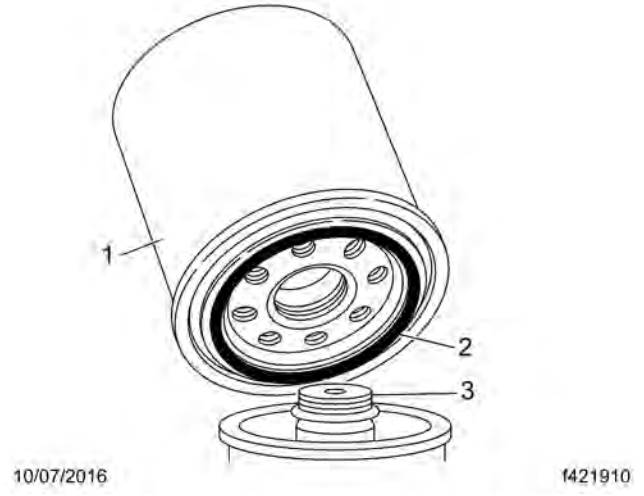

1. Desiccant Cartridge
2. Cartridge Sealing Ring
3. Threaded Base Post

Fig 81, Desiccant Cartridge Replacement

4. On the new desiccant cartridge, lubricate the sealing rings with silicone grease.

IMPORTANT: Only use the silicone grease supplied with Bendix replacement kits.

5. Screw the desiccant cartridge onto the body by hand until the seal makes contact with the body. Rotate the cartridge clockwise about one full turn. Tighten the cartridge firmly.

15.04 Inspection of the Air Dryer

1. Park the vehicle on a level surface, shut down the engine, and apply the parking brake. Chock the tires.
2. Check for moisture in the air brake system by opening the reservoir drain cocks. Examine the discharge. Some trace of water in the discharge is normal. A discharge of a milky gray liquid indicates excessive moisture is present in the air system and the desiccant cartridge needs to be replaced. See of the vehicle Workshop Manual for troubleshooting procedures. The following conditions could cause small amounts of moisture to be found in the air system:

- An outside air source has been used to charge the air brake system. This air did not pass through the drying bed.
- Air usage is unusually high and not normal. This may be due to accessory air demands or some unusual air requirement that does not allow the compressor to load and unload in a normal fashion. Check for air system leaks.
- The air dryer has been installed on a system that had previously been operated without an air dryer. This type of system will be saturated with moisture, and several weeks of operation may be needed to fully dry the system.
- The temperature range in your area fluctuates more than 30 degrees in one day. Small amounts of water can accumulate in the air brake system due to condensation. Under these conditions, the presence of moisture is normal and should not be considered an indication of poor air dryer performance.

3. Inspect the air dryer for external damage, and check that the unit is tightly mounted on the frame. If the air dryer mounting is loose, See of the vehicle Workshop Manual for mounting instructions.
4. Turn on the ignition switch, but do not start the engine.
5. Disconnect the harness connector from the air dryer.
6. Connect a voltmeter to circuit 94 on the air dryer's harness connector and to a body ground point. Check for battery voltage. If voltage is not found, check and repair the open or short to ground in wire 94.
7. Connect a voltmeter between the two terminals on the air dryer's harness connector. If voltage is not found, repair the open in the ground circuit wiring.
8. Use an ohmmeter to check resistance between the terminals on the end cover. See Fig. 82,End Cover Terminals Location. The end cover contains the heater/thermostat. If the heater/thermostat is between 40 and 90°F (4 and 32°C), the heater/thermostat measured resistance will be infinite ohms. If the measured resistance is less than infinity, replace the heater/thermostat.

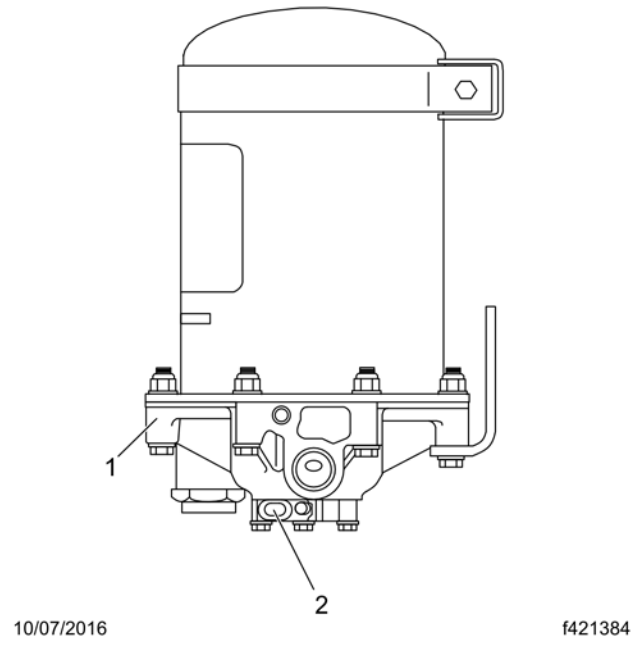

Fig 82, End Cover Terminals Location

9. Remove the heater/thermostat assembly and place it in a freezer for about five minutes to cool it below 40°F (4°C). Remove the cold heater/thermostat assembly and check resistance between the heater/thermostat terminals. Resistance should be 1.5 to 3.0 ohms. As the temperature of the heater/thermostat assembly increases, the ohm reading will increase. When the temperature goes above 45°F (7°C) measured resistance should be infinite ohms. If the heater/thermostat does not operate as outlined, replace it. If it does operate as outlined, install it.

15.05 Alcohol Evaporator Cleaning and Inspection

15.05.01 General Information

Maintenance is required during both the freeze season and the off season to keep the alcohol evaporator in good working order.

Off Season

During the off season, drain the unit of alcohol. At regular engine service intervals, open the drain cock to remove moisture from the alcohol evaporator. Before reactivating the evaporator for the next freeze season, drain, disassemble, inspect, and steam-clean the unit of any sludge that may have accumulated. It is advisable to replace any rubber parts when assembling the alcohol evaporator. Perform this service just before the freeze season.

Freeze Season Reactivation

1. Park the vehicle on a level surface, shut down the engine, and apply the parking brake. Chock the tires.
2. Remove the filler cap, and check the cap tetraseal.
3. Remove the capscrews and reservoir from the cover.
4. Remove the cover tetraseal.
5. Drain the air tank, and disconnect the line from the evaporator outlet. Remove the check-valve retainer, spring, and disc.
6. Install the disc, spring, and check-valve retainer, and connect the line to the evaporator outlet.
7. Install the cover tetraseal.
8. Install the reservoir on the cover and tighten the capscrews.
9. Fill the reservoir with 40 ounces (1182 mL) of methyl alcohol, then install the filler cap.

15.06 Brake Inspection

15.06.01 Parking Brake Operational Check



CAUTION:

Perform the following check in a clear safe area. If the parking brakes fail to hold the vehicle, personal injury or property damage may result.

IMPORTANT: This procedure should be performed prior to lubrication of the brake components.

1. With the engine running, and air pressure at cut-out pressure, set the parking brake.
2. Put the vehicle in the lowest gear and gently attempt to move it forward. The vehicle should not move. If the vehicle moves, the parking brakes are not operating correctly and must be repaired before the vehicle is returned to service. See of the **57X Workshop Manual**.

15.06.02 Brake Component Inspection

Air Disc Brakes

General Information

IMPORTANT: The following step to inspect the caliper mounting bolts should only be performed at the initial maintenance (IM) interval.

Vehicles may have both **axial and radial** mounted calipers. Follow the instructions based on the type of calipers installed on the vehicle.
Axial Mounted Brakes

IMPORTANT: The following information applies to all types of axial mounted brake applications.

1. Park the vehicle on a level surface, shut down the engine, and set the parking brake. Chock the tires.
2. Raise the vehicle and support it on jack stands.
3. Remove all of the wheel assemblies. For instructions, see of the **57X Workshop Manual**.

NOTE: In all steps that require a torque wrench, use a Snap On torque wrench ATECH4RS600, or an equivalent, with a center to handle length of 47 inches (119 cm).

4. Set a torque wrench to 350 lbf·ft (475 N·m) and tighten the caliper mounting bolts following the tightening pattern shown in Fig.83,Axial Bolt Tightening Pattern. If they do not turn, no further work is needed. If they turn, take the vehicle to an authorized Western Star dealer to have all of the caliper bolts on that wheel end replaced. Due to limited caliper bolt access, it may be necessary to use tool DDC DSNCHA018005 referenced in tool letter 18TL18. If the tool is needed, use tool DDC DSNCHA018005 only and no other tools. See Fig. 84,DDC DSNCHA018005 30mm Air Disc Brake Caliper Brake Bolt Torque Adaptor. If the tool is needed, see Table.34,Torque Check with 47 Inch (119 cm) Torque Wrench and Tool DDC DSNCHA018005 for torque specifications for a 47 in (119 cm) long wrench.



Fig 83, Axial Bolt Tightening Pattern



Fig 84, DDC DSNCHA018005 30mm Air Disc Brake Caliper Brake Bolt Torque Adaptor

Table 34, Torque Check with 47 Inch (119 cm) Torque Wrench and Tool DDC DSNCHA018005

Torque Check with 47 Inch (119 cm) Torque Wrench and Tool DDC DSNCHA018005			
Angle View	**Extension Angle (degrees)**	**Target Torque ~~*~lbf·ft (N·m)]**	**Tool Setting ~~*~lbf·ft (N·m)]**
	0	350 (475)	296 (401)
	45		310 (420)
	60		320 (434)
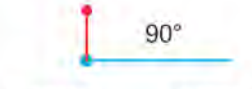	90		350 (475)
	120		386 (523)
	135		402 (545)

Table 34, Torque Check with 47 Inch (119 cm) Torque Wrench and Tool DDC DSNCHA018005

5. Install the wheel assemblies. For instructions, see of the **57X Workshop Manual**.
6. Remove the jack stands and lower the vehicle.

Radial Mounted Brakes

Bendix Calipers

1. Park the vehicle on a level surface, shut down the engine, and set the parking brake. Chock the tires.
2. Raise the vehicle and support it on jack stands.
3. Remove all of the wheel assemblies. For instructions, see of the **57X Workshop Manual**.
4. Set a torque wrench to 200 lbf·ft (271 N·m) and tighten the caliper mounting bolts following the tightening pattern shown in Fig.85,Bendix Radial Mounted Caliper Tightening Pattern (viewed from below). If they do not turn, no further work is needed. If they turn, take the vehicle to an authorized Western Star dealer to have all of the caliper bolts on that wheel end replaced.

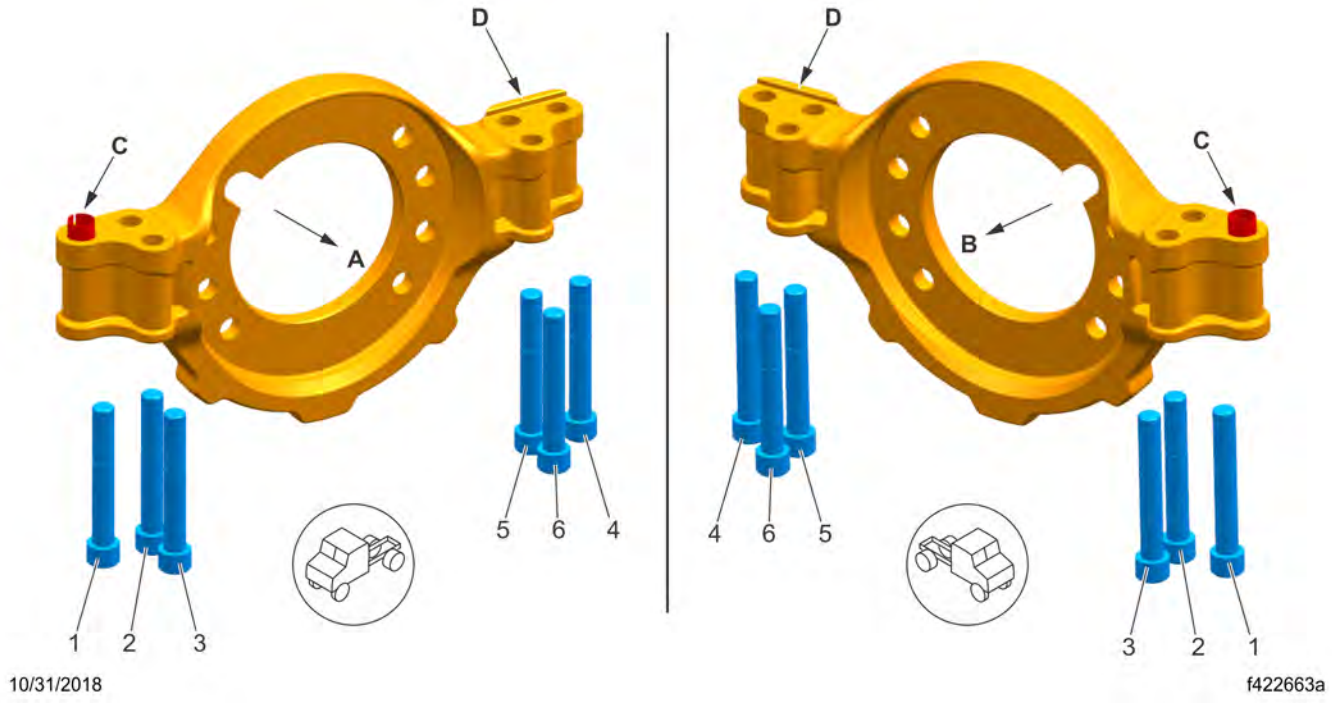

A. Right-hand brake (viewed from below).
B. Left-hand brake (viewed from below).
C. Sheer sleeve above in this location.
D. Shelf above in this location.

Fig 85, Bendix Radial Mounted Caliper Tightening Pattern (viewed from below)

5. Install the wheel assemblies. For instructions, see of the **57X Workshop Manual**.
6. Remove the jack stands and lower the vehicle.

Meritor Calipers

1. Park the vehicle on a level surface, shut down the engine, and set the parking brake. Chock the tires.
2. Raise the vehicle and support it on jack stands.
3. Remove all of the wheel assemblies. For instructions, see of the **57X Workshop Manual**.
4. Set a torque wrench to 350 lbf·ft (475 N·m) and tighten the caliper mounting bolts following the tightening pattern shown in Fig.86,Meritor Radial Mounted Caliper Tightening Pattern. If they do not turn, no further work is needed. If they turn, take the vehicle to an authorized Western Star dealer to have all of the caliper bolts on that wheel end replaced.

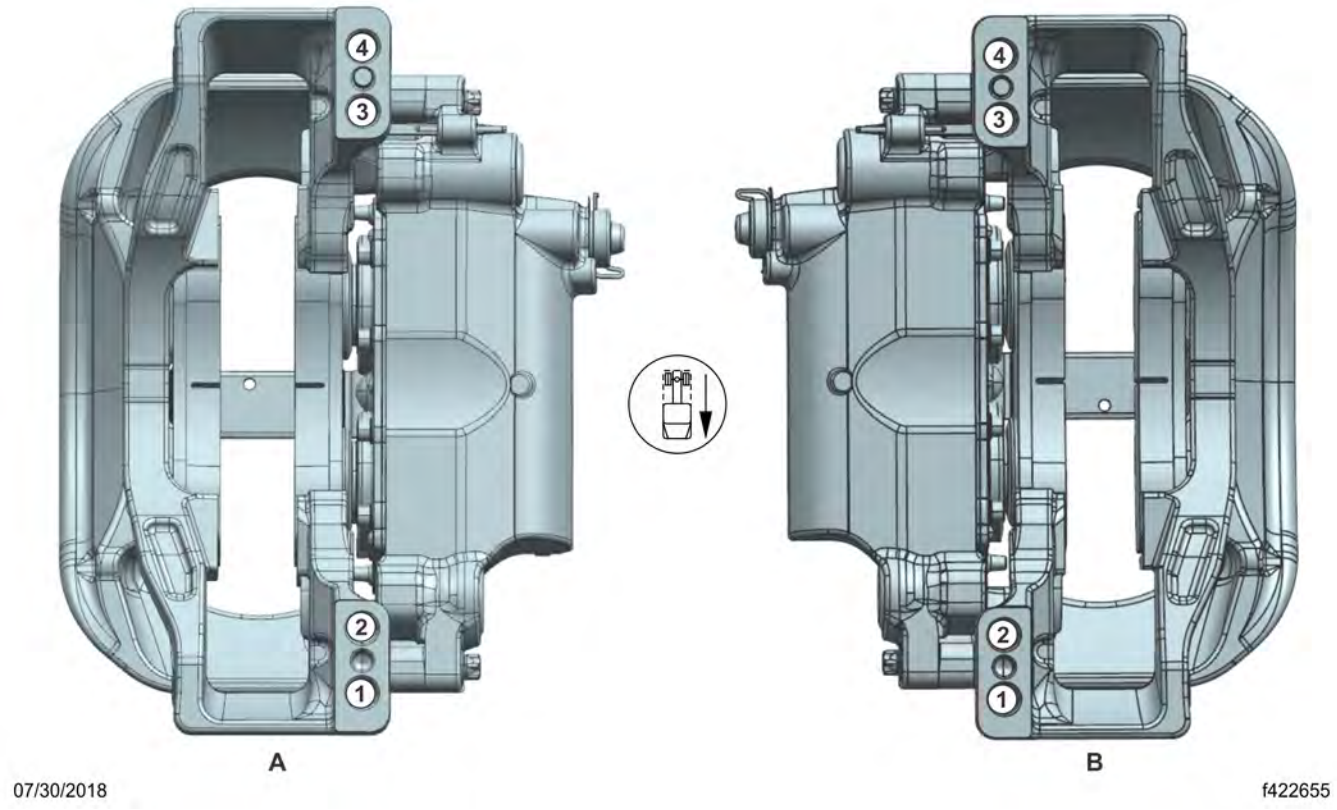

NOTE: Tighten the fasteners in the order indicated.

A. Left Hand, Bottom View

B. Right Hand, Bottom View

Fig 86, Meritor Radial Mounted Caliper Tightening Pattern

5. Install the wheel assemblies. For instructions, see of the **57X Workshop Manual**.
6. Remove the jack stands and lower the vehicle.

WABCO Maxxus Calipers

1. Park the vehicle on a level surface, shut down the engine, and set the parking brake. Chock the tires.
2. Raise the vehicle and support it on jack stands.
3. Remove all of the wheel assemblies. For instructions, see of the **57X Workshop Manual**.
4. Set a torque wrench to 273 lbf·ft (370 N·m) and tighten the caliper mounting bolts following the tightening pattern shown in Fig.87,Wabco Maxxus Radial Mounted Caliper Tightening Pattern. If they do not turn, no further work is needed. If they turn, take the vehicle to an authorized Western Star dealer to have all of the caliper bolts on that wheel end replaced.

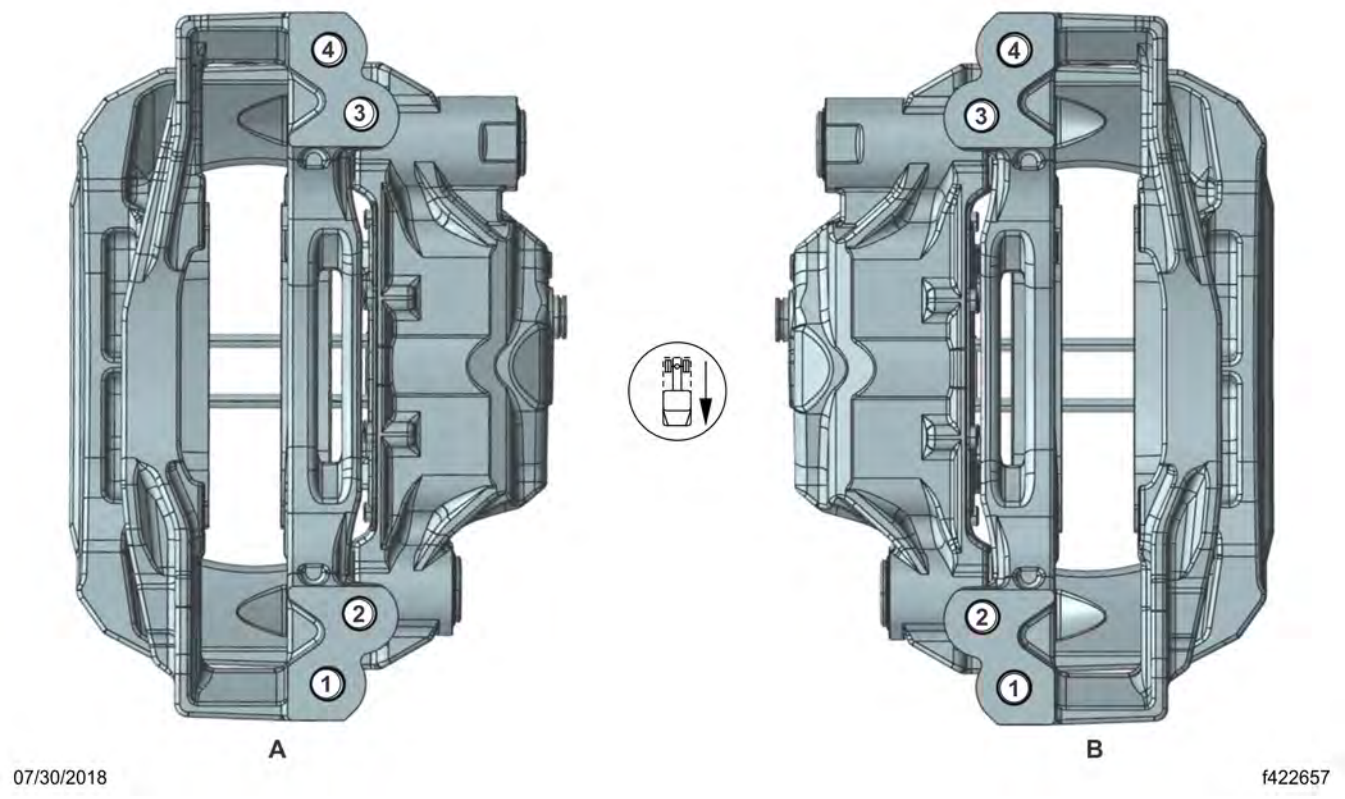

NOTE: Tighten the fasteners in the order indicated.

A. Left Hand, Bottom View B. Right Hand, Bottom View

Fig 87, Wabco Maxxus Radial Mounted Caliper Tightening Pattern

5. Install the wheel assemblies. For instructions, see of the **57X Workshop Manual**.
6. Remove the jack stands and lower the vehicle.

Drum Brakes

1. Park the vehicle on a level surface, shut down the engine, and set the parking brake. Chock the tires. Once the tires are chocked, release the parking brake.

WARNING:

Manually adjusting an automatic slack adjuster to bring the pushrod stroke within legal limits is likely masking a mechanical problem. Adjustment is not repairing. Before adjusting an automatic slack adjuster, troubleshoot the foundation brake system and inspect it for worn or damaged components. Improperly maintaining the vehicle braking system may lead to brake failure, resulting in property damage, personal injury, or death.

2. With the engine off, and 100 psi (690 kPa) of air tank pressure, have an assistant apply and hold an 80 to 90 psi (552 to 621 kPa) brake application.
3. Check to see if the colored over-stroke band on each brake chamber pushrod is exposed.

If a band shows, the stroke is too long. Check the foundation brake components for wear or damage, and repair as needed. See of the **57X Workshop Manual** for inspection, troubleshooting, and repair procedures.

4. Measure the applied chamber stroke. See Table.35,Brake Chamber Stroke Specifications for the proper stroke for the type of chamber being used. If the stroke is too short, the brakes may drag or will not fully apply. Check for improper operation or adjustment of the automatic slack adjuster. See of the **57X Workshop Manual** for inspection, trouble-shooting, and repair procedures.
5. Check all of the foundation brake components for damage, wear, and loose or missing parts. Repair as needed. See of the **57X Workshop Manual** for inspection, troubleshooting, and repair procedures.

Table 35, Brake Chamber Stroke Specifications

Brake Chamber Stroke Specifications			
Chamber			Max Applied Stroke: inch (mm)
Manufacturer	Type[1]	Size[2]	
Gunite	Standard Stroke	9	1-3/8 (35)
		12	
		16	1-3/4 (45)
		20	
		24	
		30	2 (51)
		36[3]	2-1/4 (57)
	Long Stroke	16	2 (51)
		20	
		24	
		24	2-1/2 (64)
		30	
Haldex	Standard Stroke	12	1-3/8 (35)
		16	1-3/4 (44)
		20	
		24	
	2-1/2-Inch Extended Stroke	24	2 (51)
	3-Inch Extended Stroke	24	2-1/2 (64)
	Standard Stroke	30	2 (51)
	Long Stroke	30	2-1/2 (64)
Meritor	Standard Stroke	9	Less than 1-1/2 (38)

		12	
		16	Less than 1-3/4 (44)
		20	
		24	Less than 1-7/8 (48)
	Long Stroke	24	Less than 2 (51)
	Standard Stroke	30	

1. Long stroke design is indicated by a tag, or embossing, on the brake chamber.
2. Specifications are relative to a brake application with 80 to 90 psi (550 to 620 kPa) air pressure in the brake chambers.
3. If type 36 chamber is used, slack length should be less than 6 inches.

Table 35, Brake Chamber Stroke Specifications

15.07 Haldex Slack Adjuster Lubrication

Automatic slack adjusters that have a grease fitting must be lubricated periodically to ensure proper brake operation.

WARNING:

Failure to lubricate slack adjusters could lead to dragging brakes or a brake failure, resulting in property damage, personal injury, or death.

CAUTION:

Do not use moly-disulfide-loaded grease or oil. Both the life and reliability of the slack adjuster will be reduced if this type of grease is used.

Lubricate the automatic slack adjuster at the grease fitting. See Fig.88,Haldex Automatic Slack Adjuster Grease Fitting. Use standard chassis lubricant for Haldex slack adjusters.

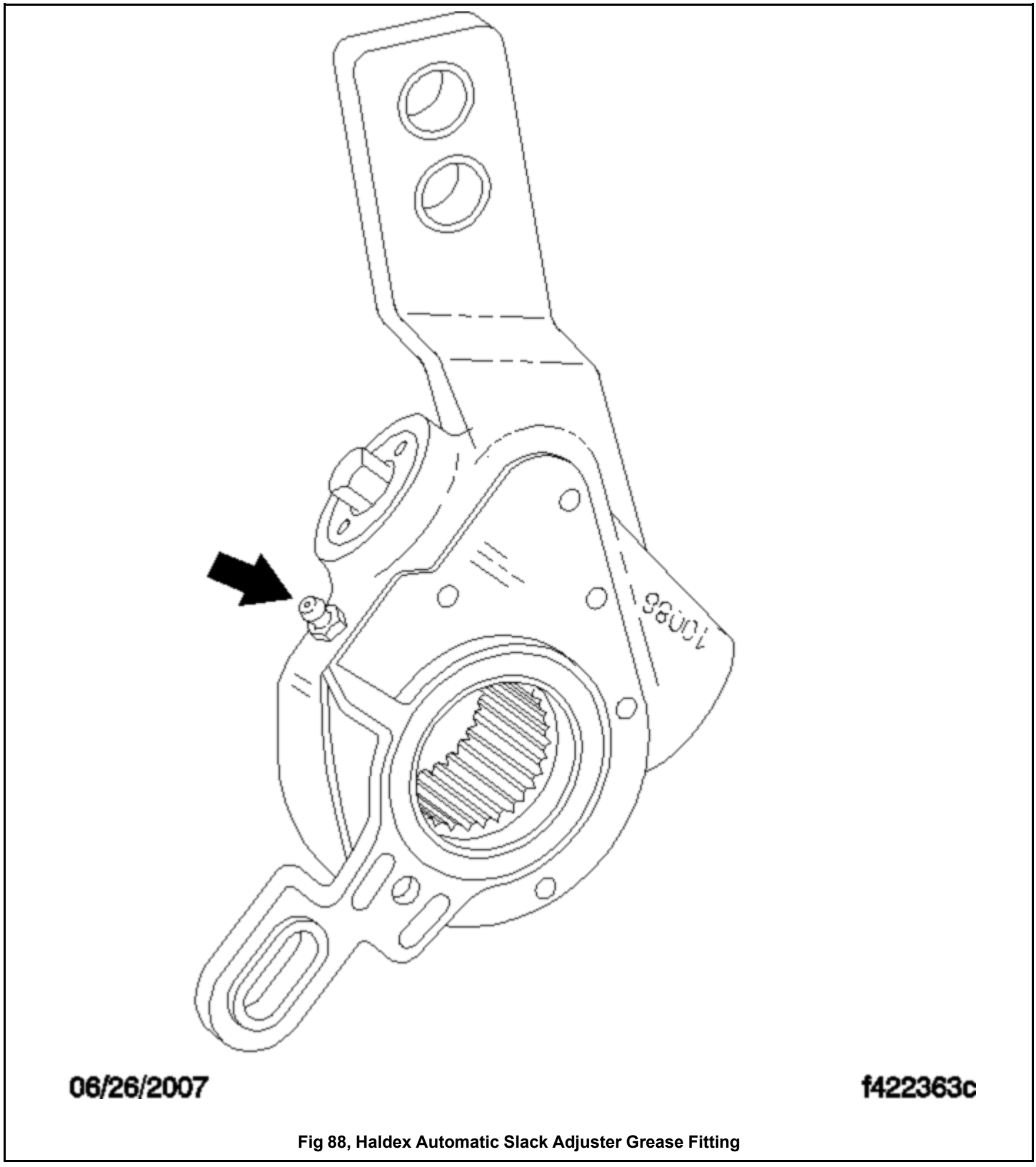

Fig 88, Haldex Automatic Slack Adjuster Grease Fitting

15.08 Meritor Camshaft Bracket Lubrication

15.08.01 General Information

IMPORTANT: Perform a brake inspection before lubricating the camshaft bracket.

NOTE: If equipped with an extended-maintenance Q Plus™ brake system, the camshaft bracket will not have a grease fitting. These camshafts use a special NLGI Grade synthetic polyurea grease and do not require lubrication for 3 years or 500,000 miles (804 500 km), whichever comes first. The extended-maintenance camshaft bushings are lubricated during the brake reline service interval. For service and lubrication instructions, see of the vehicle Workshop Manual.

For camshaft brackets with grease fittings, use an NLGI Grade 1 or Grade 2 multipurpose chassis grease. Lubricate the camshaft bushings through the grease fitting on the camshaft bracket or the spider until new grease flows from the inboard seal. See Fig.89,Camshaft Bracket Lubrication. Follow the steps below for proper greasing.

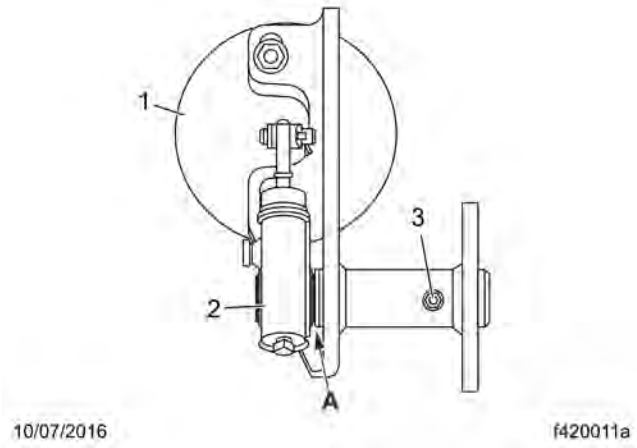

A. Grease Exit
1. Brake Chamber
2. Slack Adjuster
3. Non-Pressure-Relief Grease Fitting

Fig 89, Camshaft Bracket Lubrication

WARNING:
If grease leaks out under the camhead, the camshaft bracket grease seal is worn or damaged. See in the vehicle workshop manual for grease seal replacement instructions. If this seal is not replaced, the brake linings could become contaminated with grease. The stopping distance of the vehicle will be increased, which could result in personal injury or property damage.

15.08.02 Greasing the Steer Axle S-cam Tube

1. Park the vehicle on a level surface, shut down the engine, and set the parking brake.
2. Chock the drive-axle tires.
3. Chock the steer-axle tires.
4. Grease the S-cam tubes.

15.08.03 Greasing the Drive Axle S-cam Tube

1. Park the vehicle on a level surface, shut down the engine, and set the parking brake.

2. Chock the front tires.
3. Chock one drive tire.
4. Cage the drive tire park-brake chamber opposite of the tire that is chocked.
5. Grease the S-cam tube on the caged park-brake chamber side only.
6. Uncage the park-brake chamber.
7. Move the drive tire chock to the other side of the axle and chock the other set of tires.
8. Cage the drive-tire park-brake chamber opposite of the tire that is chocked.
9. Grease the S-cam tube on the caged brake side only.
10. Uncage the park-brake chamber.
11. If equipped with more than one drive-axle, repeat this process for the remaining drive-axle.

15.09 Meritor Slack Adjuster Lubrication

15.09.01 General Information

IMPORTANT: Perform a brake inspection following the instructions in this group before lubricating the slack adjusters.

WARNING:
Failure to lubricate slack adjusters could lead to dragging brakes or a brake failure, resulting in property damage, personal injury, or death.

NOTE: If equipped with an extended-maintenance Q Plus™ brake system, the slack adjuster will not have a grease fitting. These slack adjusters use a special NLGI Grade synthetic polyurea grease and do not require lubrication for 3 years or 500,000 miles (804 500 km), whichever comes first. The extended-maintenance slack adjusters are lubricated during the brake reline service interval. For service and lubrication instructions, see of the vehicle Workshop Manual.

For slack adjusters with grease fittings and for operating temperatures above –40°F (–40°C), use an NLGI Grade 1 clay-base grease, or an NLGI Grade 1 or 2 lithium-base grease.

For slack adjusters with grease fittings and for operating temperatures below –40°F (–40°C) and above –65°F (–54°C), use an NLGI Grade 2 synthetic oil, clay-base grease.

Lubricate the slack adjuster at the grease fitting until grease is forced past the pressure-relief capscrew or past the gear splines around the inboard snap ring. See Fig.90,Meritor Automatic Slack Adjuster. Follow the steps below for proper greasing.

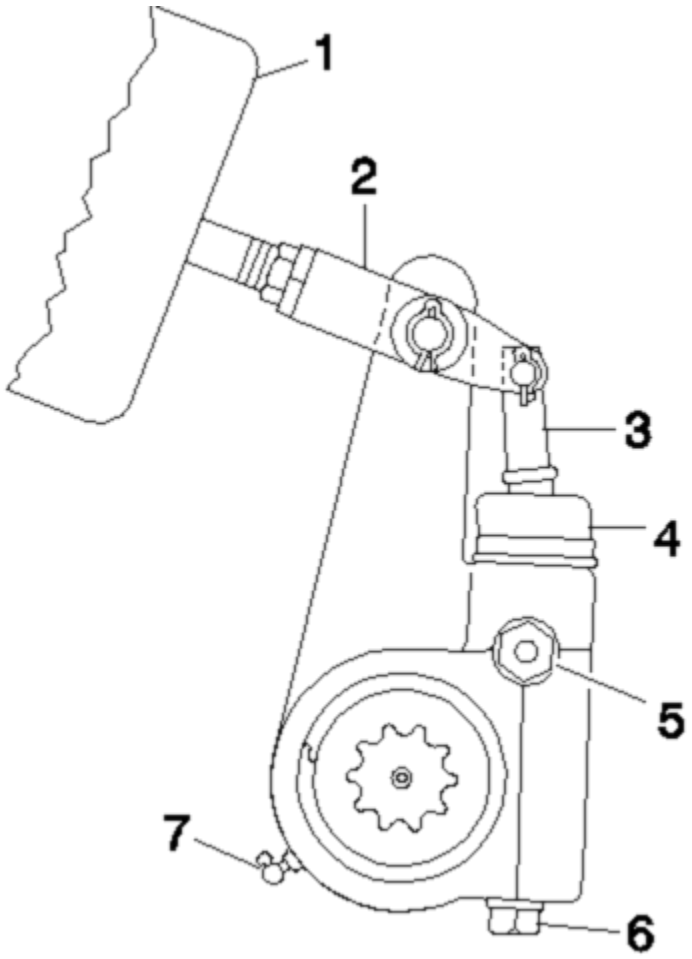

1. Brake Chamber
2. Clevis
3. Actuator Rod
4. Boot
5. Pressure-Relief Capscrew, Gasket, Pawl Spring, and Pawl
6. Manual Adjusting Nut
7. Grease Fitting (or plug)

Fig 90, Meritor Automatic Slack Adjuster

15.09.02 Steer Axle Slack Adjuster Greasing

1. Park the vehicle on a level surface, shut down the engine, and set the parking brake.
2. Chock the drive-axle tires.
3. Chock the steer-axle tires.
4. Grease the slack adjuster.

15.09.03 Greasing the Drive Axle Slack Adjuster

1. Park the vehicle on a level surface, shut down the engine, and set the parking brake.
2. Chock the front tires.
3. Chock one drive-axle tire.
4. Cage the drive-tire park-brake chamber opposite of the tire that is chocked.
5. Grease the slack adjuster on the caged brake side only.
6. Uncage the park brake.

7. Move the drive-tire chock to the other side of the axle and chock the other set of tires.
8. Cage the drive-tire park-brake chamber opposite of the tire that is chocked.
9. Grease the slack adjuster on the caged brake side only.
10. Uncage the park brake.
11. If equipped with more than one drive-axle, repeat this process for the remaining drive-axles.

15.10 Inspection and Lubrication of the Bendix E-6 Foot Control Valve

1. Remove the brake valve from the vehicle; see of the vehicle Workshop Manual.
2. Remove the roll pin from the brake pedal pivot pin. See Fig.91,Brake Pedal and Valve Assembly.

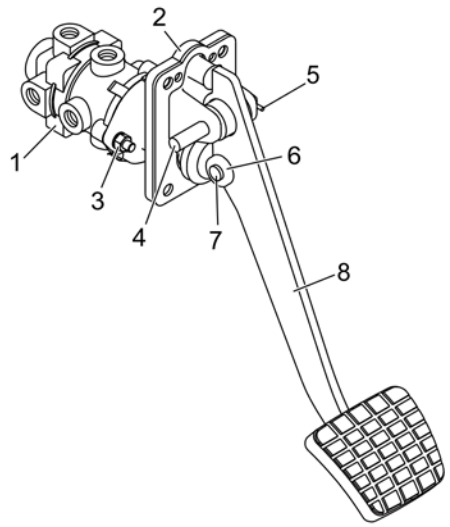

1. E-6 Foot Control Valve
2. Mounting Plate
3. Nut and Washer
4. Pivot Pin
5. Roll Pin
6. Roller
7. Roller Pin
8. Pedal

Fig 91, Brake Pedal and Valve Assembly

3. Remove the brake pedal pivot pin.
4. Remove the brake pedal.
5. Check the brake pedal mounting plate adapter for signs of wear or cracks at the bosses (the area from which the pivot pin was removed). Replace it if necessary.
6. Check the brake pedal rollers for signs of wear or cracks. Replace the rollers as needed.
7. If the rollers are replaced, replace the roller pin, install a new cotter pin, bend it to 90 degrees and apply Torque Seal (OPG F900 White) to the cotter pin.
8. Remove the plunger from the valve. Using alcohol, clean the existing grease from the plunger. Check the plunger for signs of wear or cracks. Replace it if necessary.
9. Lubricate the plunger with barium grease (BW 246671).
10. Insert the plunger in the valve.
11. Install the brake pedal with the pivot pin.

12. Install a new roll pin and apply Torque Seal (OPG F900 White) to the roll pin.
13. Install the brake valve assembly; see , of the vehicle workshop manual.
14. Test the brakes before returning the vehicle to service.

15.11 Replacement of the WABCO System Saver Air Dryer Desiccant Cartridge

NOTE: The following instructions apply to the System Saver 1200, 1200 Plus, and Twin air dryers.

NOTICE:

The WABCO System Saver air dryers can use either a standard or oil coalescing desiccant cartridge. When replacing the desiccant cartridge, it is very important to use the same type of cartridge that was originally installed on the dryer. Oil coalescing cartridges can be used in any application, but require more frequent service intervals (every 1 to 2 years instead of every 2 to 3 years for a standard cartridge). Do not replace an oil coalescing cartridge with a standard cartridge, as this may result in contamination and malfunctioning of downstream air system components.

See Fig.92,Desiccant Cartridge Replacement for cartridge replacement.

1. Drain the air system.

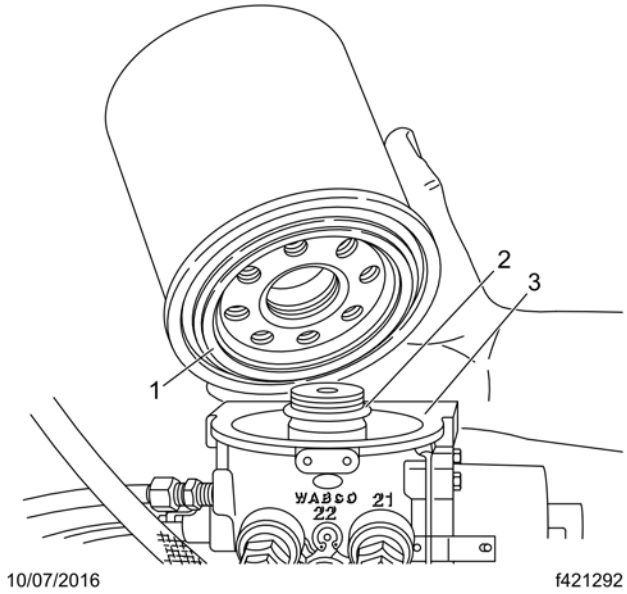

1. Seal
2. O-Ring
3. Air Dryer Base

Fig 92, Desiccant Cartridge Replacement

2. Using a strap wrench, turn the desiccant cartridge counterclockwise and remove it.
3. Remove and discard the O-ring.
4. Clean the top surface of the dryer base with a commercial cleaning solvent.

IMPORTANT: If the air dryer base is damaged, preventing a tight seal, replace the air dryer.

5. Using a multipurpose, high-temperature grease that resists water, steam, and alkali, lightly coat the surfaces of the new O-ring and the dryer base. Install the O-ring.
6. Thread the desiccant cartridge onto the dryer base (turn clockwise). When the seal contacts the base, tighten the cartridge one complete turn more. Do not overtighten.

15.12 Versajust Slack Adjuster Inspection and Lubrication

15.12.01 General Information

IMPORTANT: Perform the **Brake Inspection** maintenance operation before lubricating the slack adjusters.

1. Visually check for physical damage, such as broken air lines and broken or missing parts.
2. Using a quality multipurpose chassis lubricant, NLGI Grade 2, lubricate the slack adjuster through the grease fitting until clean lubricant flows from the grease relief opening in the boot.
3. Perform the "In Service Inspection."

In Service Inspection

1. Apply and release the brakes several times while observing the slack adjuster. The slack adjuster and brake actuator should move freely, without binding or interference, and should return to the full released position. Observe the looseness that exists between the clevis and adapter bushing and the yoke and link pins and their mating parts (clevis, body, link). Replace these parts if looseness appears excessive. Make certain the brake actuator pushrod jam nut is tightened securely.
2. Inspect the slack adjuster for physical damage, paying attention to the link, boot, and clevis. If any components are damaged, repair or replace them as necessary.
3. Measure the brake actuator pushrod stroke while making an 80 to 90 psi (552 to 621 kPa) brake application. Actuator pushrod strokes should not exceed the values shown in Table.36,Actuator Stroke–Standard Stroke and Table.37,Actuator Stroke–Long Stroke. To achieve the correct pressure for this test, build the system pressure up to a 100 psi (690 kPa). Shut down the engine. Fan the brakes to attain a 90 to 95 psi (621 to 655 kPa) reading. Make and hold a full brake application while the strokes are checked.

Table 36, Actuator Stroke–Standard Stroke

Actuator Stroke–Standard Stroke	
Brake Actuator Size	**Recommended Maximum Operating Stroke (Inches)**
30	2
24	1-3/4
20	1-3/4
16	1-3/4
12	1-3/8

Table 36, Actuator Stroke–Standard Stroke

Table 37, Actuator Stroke–Long Stroke

Actuator Stroke–Long Stroke	
Brake Actuator Size	**Recommended Maximum Operating Stroke (Inches)**
30 Long Stroke	2-1/2
24 Long	2
24 Long Stroke	2-1/2
20 Long	2
16 Long	2

Table 37, Actuator Stroke–Long Stroke

16.01 Safety Precautions 148
16.02 Inspection of the Drag Link 148
16.03 Power Steering Fluid and Filter Change 149
16.04 Lubrication of the Power Steering Gear 150
16.05 Lubrication of the Drag Link 151

16. Steering

16.01 Safety Precautions

Safety Precautions in this section apply to all procedures within this group.

DANGER:

When working on the vehicle, shut down the engine or motor, set the parking brake, and chock the tires. Before working under the vehicle, always place jack stands under the frame rails to ensure the vehicle cannot drop. Failure to follow these steps could result in serious personal injury or death.

16.02 Inspection of the Drag Link

WARNING:

All steering system components are critical for safe operation of the vehicle. Failure to maintain the steering system as specified may result in loss of steering control, which could lead to personal injury and property damage.

1. Park the vehicle on a level surface, shut down the engine, and set the parking brake. Chock the tires.
2. Have someone turn the steering wheel from left to right. Check for movement between the ball stud end and the pitman arm, and between the ball stud end and the steering arm.

   If the ball stud end is loose, replace the drag link.
3. Check the ball stud castle nut for looseness.

   If the castle nut is loose, replace it and the cotter pin. Tighten the new castle nut as follows:

   - 3/4–16: 90 to 180 lbf·ft (122 to 244 N·m)
   - 7/8–14: 160 to 300 lbf·ft (217 to 407 N·m)
4. Inspect the boot of the drag link at both the pitman arm and the steering arm end for cracks, splits, or other damage. Replace the boot if needed.
5. Grasp the drag link near the pitman arm end, then push and pull laterally to check for axial movement in the ball stud end. If it is loose, replace the drag link. See of the **57X Workshop Manual** for replacement instructions. If there is 1/8-inch (3-mm) movement or more, do not drive the vehicle until the drag link is replaced.

16.03 Power Steering Fluid and Filter Change

WARNING:

Fill only with approved clean fluid. Failure to use the proper fluid could cause seal deterioration and leaks. Fluid leaks could eventually cause loss of power steering assist. This could lead to an accident resulting in personal injury or property damage. Wear eye protection when changing the fluid and filter.

1. Set the parking brake and chock the rear tires.
2. Raise the front of the vehicle and support it with jack stands.
3. Put the vehicle in neutral.
4. Open the hood.
5. Wipe down the area around the steering gear and related hydraulic lines.
6. Place a drain pan under the steering gear and power steering reservoir.
7. Remove the pressure line and return hose (see Fig.93,Power Steering Reservoir) from the steering gear and allow the oil to drain.

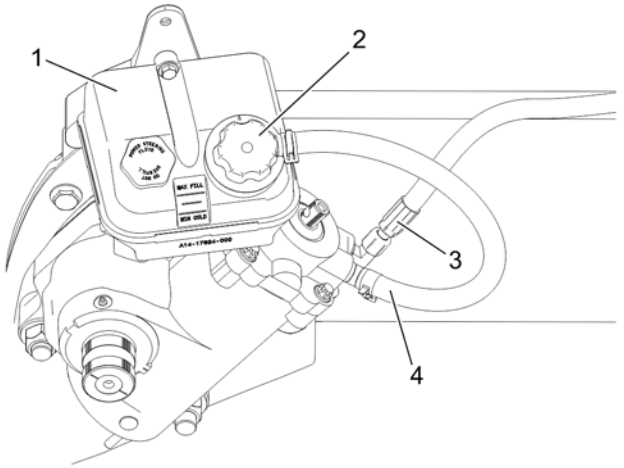

1. Reservoir
2. Filter Cap
3. Pressure Line
4. Return Hose

Fig 93, Power Steering Reservoir

8. Remove the filter cap from the reservoir, then remove and discard the filter.
   - Filter caps with a separate retaining ring have a threaded connection with the filter. Unscrew the filter and discard it.
   - One-piece filter caps do not have a threaded fit with the filter. Pull off the filter and discard it.
9. Turn the steering wheel from full left to full right three times to purge oil from the gear.
10. Connect the pressure line and return hose to the steering gear.

11. Fill the reservoir with an approved power steering fluid to the line between the MIN COLD and MAX HOT lines. See Fig.93,Power Steering Reservoir. See Table.38,Approved Power Steering Fluids for approved power steering fluids.

Table 38, Approved Power Steering Fluids

Approved Power Steering Fluids	
Fluid Type	**Approved Fluid**
Automatic Transmission Fluid	Dexron® III
	Super ATF
	TES-389

Table 38, Approved Power Steering Fluids

12. Apply a thin film of power steering fluid on the gasket of the new filter, then attach the filter to the filter cap and install the cap on the reservoir.
    - For filter caps with a separate retaining ring, hand-tighten the filter, then turn it an additional 1/4 turn.
    - For one-piece filter caps, the filter is not threaded.
13. With the engine off, turn the steering wheel from full left to full right three times. Add more power steering fluid as needed.
14. Start the engine and operate the engine at idle. Check that the power steering fluid level is between the MIN COLD and MAX HOT lines. Add more power steering fluid if needed.
15. Turn the steering wheel from full left to full right several times. Add fluid to the reservoir as needed to maintain the fluid level between the MIN COLD and MAX HOT lines.
16. Shut down the engine.
17. Raise the vehicle, remove the jack stands, and lower the vehicle.

16.04 Lubrication of the Power Steering Gear

NOTICE:
Apply grease to the sector shaft with a hand-type grease gun only. Use of a high-pressure power grease gun will supply grease too quickly and could affect the high pressure seal, contaminating the hydraulic fluid.

Using a hand-type grease gun, apply NLGI Grade 2 or 3 multipurpose chassis grease until it starts to come out past the sector shaft seal. See Fig.94,Steering Gear Lubrication.

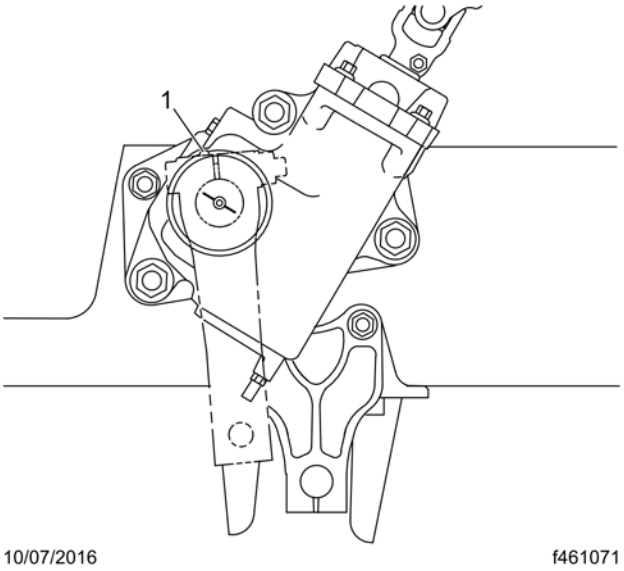

1. Sector Shaft Grease Fitting

Fig 94, Steering Gear Lubrication

16.05 Lubrication of the Drag Link

1. Park the vehicle on a level surface, shut down the engine, and set the parking brake. Chock the tires.
2. Using a clean rag, wipe all dirt from the drag link grease fittings. See Fig.95,Drag Link.
3. Using a pressure gun and NLGI Grade 2 (8% 12-hydroxy lithium stearate grease) or NLGI Grade 1 (6% 12-hydroxy lithium stearate grease) chassis grease, apply clean grease at the grease fittings until old grease is forced out of the socket.

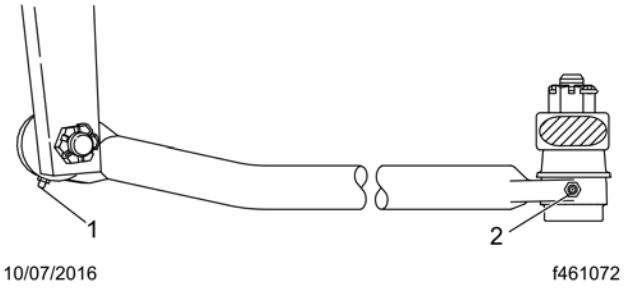

1. Grease Fitting at Pitman Arm
2. Grease Fitting at Axle Steering Arm

Fig 95, Drag Link

17.01 Safety Precautions 154
17.02 Fuel Filter Replacement 154
17.03 Fuel/Water Separator Element Checking and Replacement 154
17.03.01 Detroit 154
17.03.02 DAVCO Fuel Pro® 485 158
17.04 Tightening the Fuel Tank Band-Nut 161

17. Fuel

17.01 Safety Precautions

Safety Precautions in this section apply to all procedures within this group.

DANGER:

When working on the vehicle, shut down the engine or motor, set the parking brake, and chock the tires. Before working under the vehicle, always place jack stands under the frame rails to ensure the vehicle cannot drop. Failure to follow these steps could result in serious personal injury or death.

17.02 Fuel Filter Replacement

For engine-mounted fuel filter replacement, refer to the engine manufacturer's service manual for removal and installation procedures.

17.03 Fuel/Water Separator Element Checking and Replacement

17.03.01 Detroit

IMPORTANT: For engine-mounted fuel filter replacement, refer to the engine manufacturer's service literature for replacement intervals.

The only maintenance necessary on an Detroit fuel/water separator is to replace the filter element. See Fig. 96,Detroit Fuel/Water Separator.

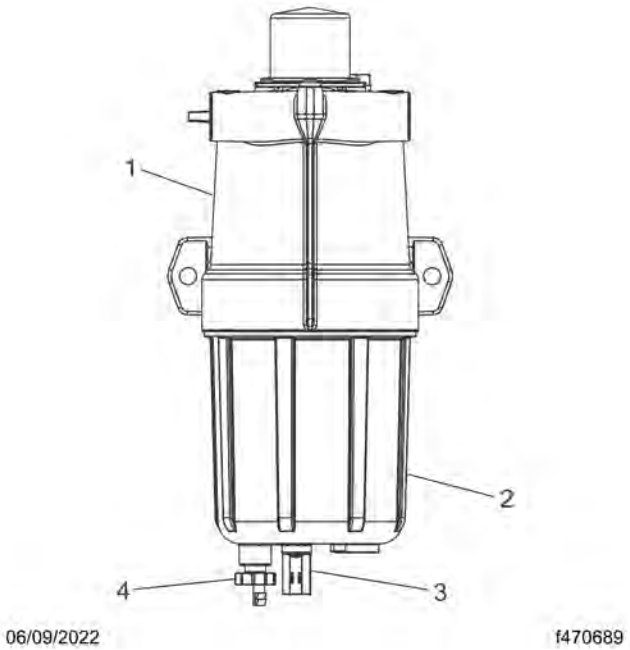

1. Mounting Head
2. Sight Bowl
3. Drain Valve
4. Sensor

Fig 96, Detroit Fuel/Water Separator

WARNING:

Fluid circulated through the fuel/water separator to heat the fuel may be diesel fuel returned from the engine, or engine coolant. Drain the fuel/water separator only when the engine and fluids have cooled. Draining it when the engine is hot could cause severe personal injury due to scalding.

If returning fuel is released into the atmosphere, its vapors can ignite in the presence of any ignition source. Do not expose the fuel to, or work with the fuel system near, open flame or intense heat. To do so could cause fire, possibly resulting in serious personal injury or property damage.

NOTE: Removing the bypass valve port plug completely could dislodge the valve and spring, exposing the downstream systems to unfiltered fuel.

1. Empty the bowl by opening the drain valve and loosening the vent plug, or bypass valve port if equipped with a fuel priming bulb. See Fig.96,Detroit Fuel/Water Separator and Fig.98,Bypass Valve Port Plug.
2. Disconnect the water sensor and heater connections if equipped.
3. Loosen the bowl with a wrench from the kit PKI PFRK61730, shown in Fig. 97,Parker Fuel/Water Separator Bowl Wrench, and unscrew it.



Fig 97, Parker Fuel/Water Separator Bowl Wrench

4. Remove the element, bowl O-ring, and element O-ring.
5. Thoroughly clean all of the threads and sealing surfaces. Even a small amount of dirt will prevent the fuel/water separator from sealing, and an air leak may result.
6. Apply a coating of clean fuel or motor oil to the new O-ring and to the new element o-ring.
7. Insert the new element into the upper housing.

IMPORTANT: Do not use tools to tighten the bowl and element.

8. Hand tighten the bowl into the upper housing.
9. Connect the water sensor and heater connectors if equipped.

NOTE: Removing the bypass valve port plug completely could dislodge the valve and spring, exposing the downstream systems to unfiltered fuel.

10. If equipped with a primer pump, prime the fuel/water separator as follows.
    - 10.a Loosen the bypass port valve plug, but do not remove it. Then operate the primer pump until the fuel purges at the plug.
    - 10.b Tighten the bypass valve plug to 22 lbf·ft (30 N·m). See Fig.98,Bypass Valve Port Plug.

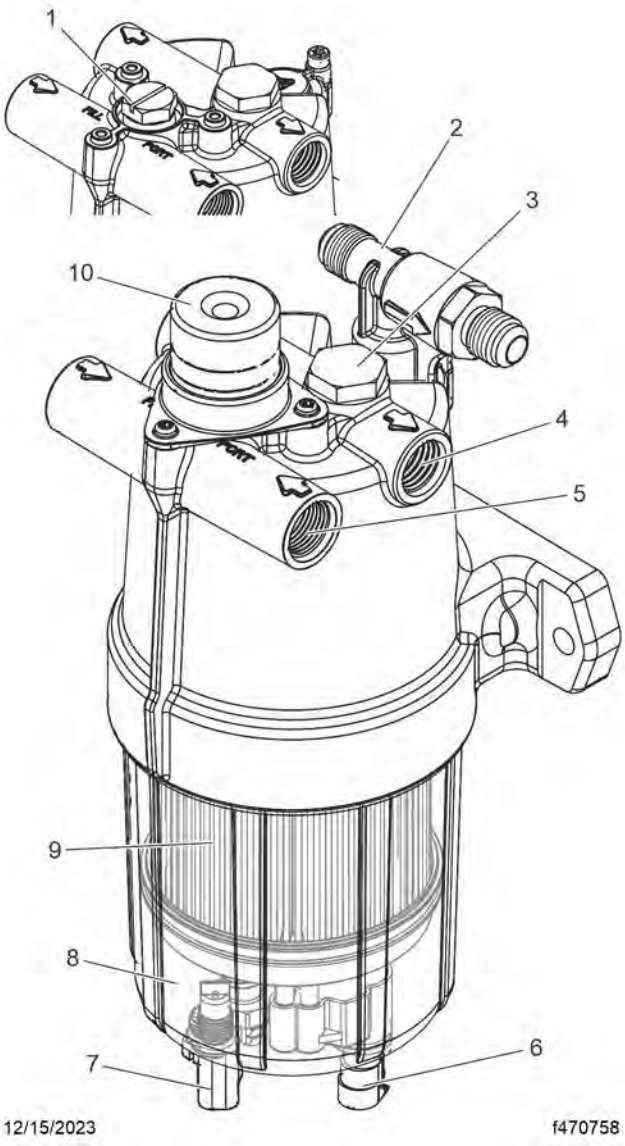

1. Fill Port Plug (Optional)
2. Return Fuel Heating Loop
3. Bypass Valve Port Plug
4. Fuel Inlet Port
5. Fuel Inlet Port
6. Fuel Heater, 12V
7. WIF Sensor
8. Clear Bowl
9. Filter Element
10. Primer (Optional)

Fig 98, Bypass Valve Port Plug

11. If not equipped with a priming bulb, prime the filter as follows.
    - 11.a Remove the vent port cap and fill the unit with clean fuel.
    - 11.b Hand tighten the port cap.
12. Start the engine and check for fuel leaks.

17.03.02 DAVCO Fuel Pro® 485

WARNING:

Fluid circulated through the fuel/water separator to heat the fuel may be diesel fuel returned from the engine, or engine coolant. Drain the fuel/water separator only when the engine and fluids have cooled. Draining it when the engine is hot could cause severe personal injury due to scalding.

If returning fuel is released into the atmosphere, its vapors can ignite in the presence of any ignition source. Do not expose the fuel to, or work with the fuel system near, open flame or intense heat. To do so could cause fire, possibly resulting in serious personal injury or property damage.

IMPORTANT: For engine-mounted fuel filter replacement, refer to the engine manufacturer's service literature for replacement intervals.

1. Park the vehicle on a level surface, shut down the engine, and apply the parking brake. Chock the tires.
2. Check the fuel level in the fuel filter. Replace the fuel/water separator element **only** when the filter element is completely covered. If the fuel level has reached the top of the filter element, follow the procedure below to replace the element.
3. Put a clean receptacle under the fuel/water separator and attach a piece of hose to the drain valve, to direct fuel into the receptacle.

   On older models, the drain valve has a 1/2-inch (13-mm) pipe with threads. Use a hose with a 1/2-inch pipe thread to fit correctly and open the drain valve by turning it one-quarter revolution.

   On new models, the drain valve has a 3/4-inch (19-mm) slip-on hose connection; pipe threads are no longer used. Open the drain valve by turning it one to one-and-a-half revolutions.
4. Remove the vent cap, shown in Fig.99,DAVCO Fuel Pro 485, to drain the fuel completely, then close the drain valve.

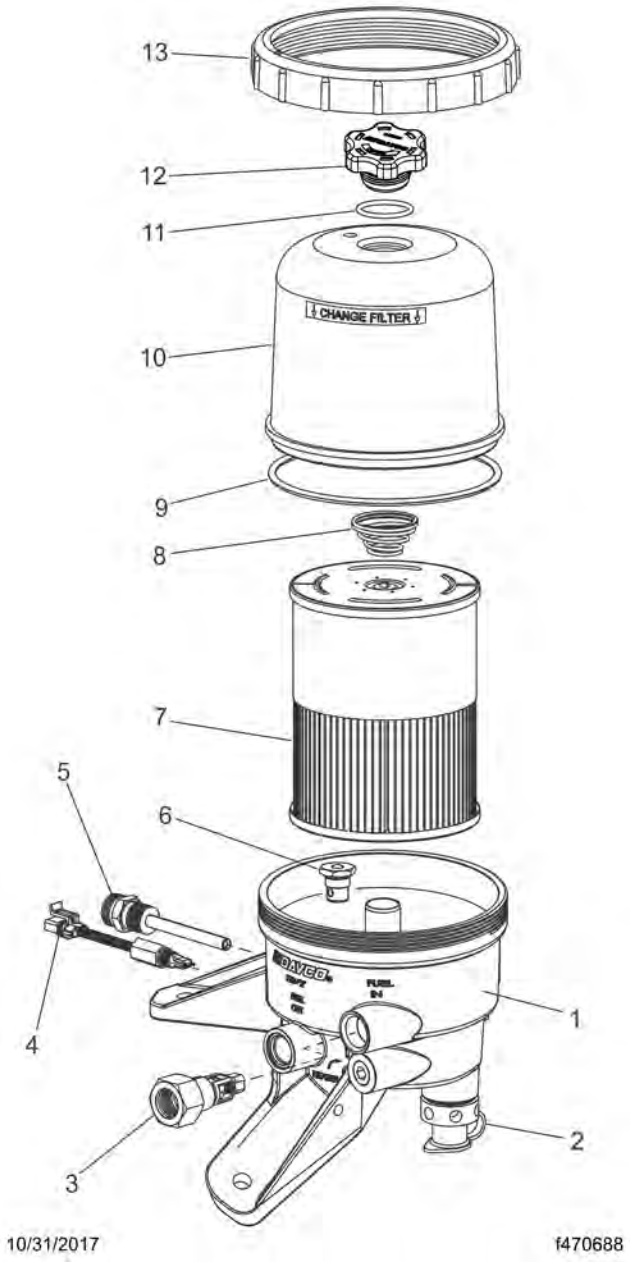

1. Lower Housing
2. Drain Valve
3. Inlet Port/Check Valve
4. 12VDC Pre-Heater
5. 120VAC Pre-Heater
6. Bypass Valve
7. Filter Element
8. Spring
9. Cover O-Ring
10. Clear Cover
11. Vent Cap O-Ring
12. Vent Cap
13. Collar

Fig 99, DAVCO Fuel Pro 485

5. Using a DAVCO Collar Wrench, shown in Fig.100,DAVCO Collar Wrench, remove the clear cover and collar.

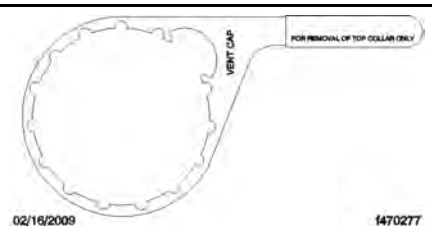

Fig 100, DAVCO Collar Wrench

NOTE: Broken vent cap and collar warranty claims will not be accepted if any tool other than a DAVCO Collar Wrench (part number 482017) is used for removal. During installation, the vent cap is to be **hand-tightened only** , not tightened with a wrench.

6. Remove the filter, cover O-ring, and vent cap O-ring. Dispose of them in an environmentally acceptable manner. See Fig.99,DAVCO Fuel Pro 485.
7. Clean all threads and sealing surfaces very thoroughly. Even a small amount of dirt will prevent the fuel/water separator from sealing, and an air leak may result.
8. Install the new filter and grommet assembly and cover O-ring on the housing.

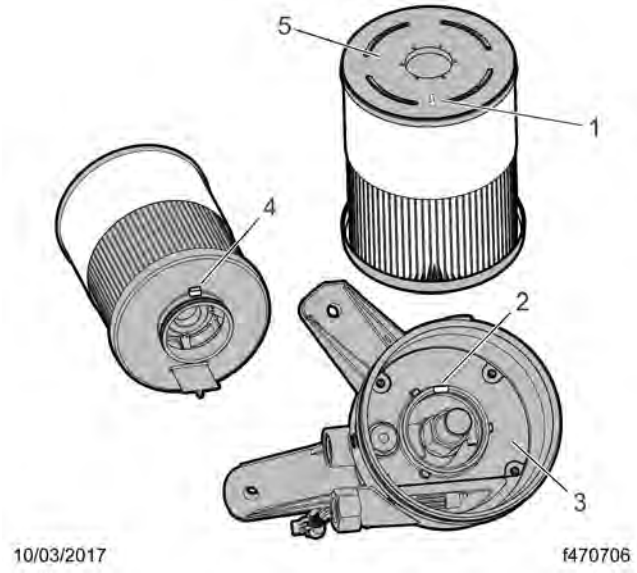

1. Arrow (on the endplate)
2. Keyway
3. Separator Plate
4. Key
5. Endplate

Fig 101, Positioning the Filter Element

9. Position the filter element so the key is lined up with the keyway on the separator plate of the housing. Use the arrow on the top of the endplate to align the filter. See Fig.101,Positioning the Filter Element. Ensure the filter element is fully seated by firmly pushing on the endplate. The filter should not rotate freely.

10. Install the clear cover and the collar. Simultaneously apply downward pressure to the top of the clear cover until it is seated on the body of the lower housing and hand tighten the collar until it no longer spins freely. Using the collar wrench, tighten the cover 18 lbf·ft (24 N·m). This is equivalent to rotating the collar clockwise two or three additional ribs, depending on the specific filter model.
11. Prime the system
    - 11.a Ensure that the drain valve is closed.
    - 11.b Fill the housing to the top of the filter element with clean diesel fuel.
    - 11.c Install and hand-tighten the vent cap O-ring and vent cap.
    - 11.d Start the engine. When the lubricating oil reaches its normal operating pressure, increase engine speed to high idle for one to two minutes to purge air from the system.
    - 11.e While the engine is running, and after the air is purged from the system, loosen the vent cap until the fuel level falls to just above the collar, then hand-tighten the vent cap.
    - 11.f Check for leaks and shut down the engine.

17.04 Tightening the Fuel Tank Band-Nut

IMPORTANT: Do not overtighten the nuts.

Hold each fuel tank band retention nut with a wrench while backing off its jam nut, then tighten the retention nuts 30 to 35 lbf·ft (41 to 47 N·m). After the retention nuts have been tightened, hold each retention nut with a wrench while tightening its jam nut 30 lbf·ft (41 N·m).

18.01 Safety Precautions 164
18.02 Exhaust System Inspection (noise emission control) 164
18.02.01 General Information 164
18.02.02 EPA10 and Newer Exhaust System 164

18. Exhaust

18.01 Safety Precautions

Safety Precautions in this section apply to all procedures within this group.



DANGER:

When working on the vehicle, shut down the engine or motor, set the parking brake, and chock the tires. Before working under the vehicle, always place jack stands under the frame rails to ensure the vehicle cannot drop. Failure to follow these steps could result in serious personal injury or death.

18.02 Exhaust System Inspection (noise emission control)

18.02.01 General Information

The exhaust system must be free of leaks, binding, grounding, and excessive vibrations. These conditions are usually caused by loose, broken, or misaligned clamps, brackets, or pipes. If any of these conditions exist, check the exhaust system components and alignment. Align or replace as necessary; see of the **57X Workshop Manual** , or take the vehicle to an authorized Western Star dealer.

It is a violation of US federal law to alter exhaust plumbing or aftertreatment in any way that would bring the engine out of compliance with certification requirements. (Ref: 42 U.S.C. S7522(a) (3).) It is the owner's responsibility to maintain the vehicle so that it conforms to EPA regulations.

18.02.02 EPA10 and Newer Exhaust System

Definitions of Aftertreatment (ATS) Terms

Refer to the following list of definitions of ATS terms and components.

- Aftertreatment System (ATS)—the entire exhaust system from the turbocharger to the exhaust stack or tail pipe.
- Aftertreatment Device (ATD)—a housing that contains the DOC and DPF (also the SCR and the mixing tube in one-box systems).
- Diesel Particulate Filter (DPF)—a component in the ATD that traps soot from the exhaust gas.
- Diesel Exhaust Fluid (DEF)—the chemical agent that reacts with the exhaust gases in the SCR to reduce NOx.
- DEF Pump—filters and supplies DEF to the DEF metering unit.
- SCR Catalyst—the housing containing a treated ceramic flow-through block where the DEF and exhaust gases undergo selective catalytic reduction (SCR).
- Selective Catalytic Reduction (SCR)—a process used to reduce NOx emissions.

Inspection

Model year 2007 and later diesel engines in vehicles domiciled in the U.S. or Canada are required to meet all EPA exhaust gas emission regulations effective per the applicable emission model year and are equipped with an emission aftertreatment system (ATS).

Vehicles domiciled outside of the U.S. and Canada may not have aftertreatment equipment, depending upon local statutory emissions guidelines.

1. Check the exhaust pipe, bellows, and each exhaust clamp for leakage.
2. If present, check the condition of the insulation material around the exhaust pipe between the turbocharger and the ATD.

3. Check the DPF exterior surface for dents or other damage. A dent over three inches (76 mm) in diameter and 1/4-inch (6-mm) deep could cause internal damage to the DPF, causing it to malfunction.
4. Check the SCR catalyst for dents and other damage.
5. Check for heat discoloration on the surface of the ATD. Heat discoloration may indicate internal damage; especially around the DPF.
6. Start the engine and confirm the amber Malfunction Indicator Light (MIL) is not on steady, which indicates an issue with the emission control systems. See Fig.102,Malfunction Indicator Light.



Fig 102, Malfunction Indicator Light

Replacement of the Diesel Exhaust Fluid (DEF) Filter

The Environmental Protection Agency's 2010 and later regulations require lower nitrogen oxide (NOx) exhaust emissions. Selective catalytic reduction (SCR) uses diesel exhaust fluid (DEF) to lower NOx emissions in the vehicle exhaust. A filter in the DEF pump prevents clogging of the DEF metering unit injection nozzle.

See the engine manufacturer's maintenance manual for filter replacement instructions and maintenance intervals.

19.01 Inspection and Cleaning the Trailer Cable 168

19.02 Inspection of the Electrical Component 168

19. Electrical, Instruments, and Controls

19.01 Inspection and Cleaning the Trailer Cable

1. Inspect the cables for cuts, abrasion, or other damage. If internal wiring is exposed, replace the cables.
2. Disconnect the trailer electrical cables from the sockets at the cab.
3. Inspect the cables and sockets for evidence of corrosion, and clean as necessary. If a socket is too badly corroded to clean, replace it. If corrosion has gotten into the wires and connectors inside the socket, replace the cable.

   IMPORTANT: If using a spray cleaner to remove corrosion, be careful to protect any surrounding painted surfaces. Follow appropriate safety measures.

4. Coat the inside of the sockets lightly with a lithium-based dielectric grease such as Lubriplate FLP DS–ES.
5. Connect the cables.

19.02 Inspection of the Electrical Component

1. Park the vehicle on a level surface, shut down the engine, and apply the parking brake. Chock the tires.
2. Disconnect the batteries.
3. Inspect the condition of the electrical component. Check for signs of excess dirt/debris build up on or around component. If exterior cleaning is needed for a thorough inspection, clean exterior debris from the component using a dry method such as a vacuum cleaner or using an electrical contact cleaner such as CRC QD® Electronic Cleaner.
4. Check all mounting points for loose, broken, or missing parts. Component must be securely mounted. All loose, broken, or missing parts must be repaired to maintain proper component function.
5. Inspect the component protective cover for proper fit and function. Inspect cover for cracks, broken mounting, missing sealing surfaces, warped or bulged surfaces. The cover must prevent moisture and debris from entering the components protected area. Missing, leaking, or damaged covers will result in moisture and debris entering the component and will result in component failure. When it is determined that a cover has not properly prevented moisture and debris from entering the component, the entire component must be replaced.
6. Inspect the component exterior for signs of thermal distortion, warping, bulging, discoloration, amperage related heating, color variance or shading across component which could be a sign of internal failure requiring replacement of the component. The root source causing conditions of high heat, excess amperage, and/or circuit overload component failures must be diagnosed and repaired prior to replacing the component.
7. Inspect component housing sub-assembly clips and fasteners for correct fit and location and that component sub-assembly housing seams are tight and secure. Missing, leaking, or damaged component housings must be replaced.
8. Check main power cable connections for a clean and secure fit. Connections should be free of corrosion, dirt and moisture. Connections should not have signs of thermal distortion, warping, discoloration, high amperage heating or discoloring. If needed, disconnect cables, scrub and clean as needed using a nylon brush. Clean debris with vacuum or electrical contact cleaner such as CRC QD® Electronic Cleaner, inspect terminals and mating contact terminal plating. If the terminal plating exhibits signs of unrecoverable corrosion, the component and terminal will need replaced. Indications of unrecoverable corrosion on terminal plating are:
   - Heavy staining that cannot be cleaned off with nylon brush or contact cleaner;
   - erosion and pitting on terminal plating causing uneven surfaces; or
   - discoloration caused by outer layer of plating being removed by corrosion or wear exposing the under layer material of terminal.
9. Check all electrical connectors for correct fit and that the connector locking tabs are in place and will hold the connector firmly into the component. Inspect connector terminals for signs of corrosion, thermal distortion, warping, discoloration, high amperage heating or discoloring. If needed, remove connectors and terminals, scrub and clean as needed

using a nylon brush. Clean debris with vacuum or electrical contact cleaner such as CRC QD® Electronic Cleaner, inspect terminals and mating contact terminal plating. If the terminal plating exhibits signs of unrecoverable corrosion, the component and terminal will need to be replaced.

10. Inspect sealed harness connectors for presence of connector housing seals and connector pin seals designed to keep moisture and debris from entering the connector and component. Missing, leaking, or damaged seals will result in moisture and debris entering the connection and the component and will result in component failure. When it is determined that connector seals have not properly prevented moisture and debris from entering the component, the entire component must be replaced.
11. Inspect component harnesses for secured routing that prevents excess harness movement and prevents the harness from pulling too tight on the connector. Inspect harnesses for signs of rubbing or chafing that could result in wire circuit damage. Damaged wiring and/or damage to harness protective wrap must be repaired and harness must be wrapped and secured to prevent further damage. When possible, harness should be routed with drip loop.
12. Inspect fuses and relays for correct fit, and that the terminals hold the fuses and relays firmly in place. Inspect fuses and relays for signs of corrosion, thermal distortion, warping, discoloration, and high amperage heating or discoloring. If loose or corroded, remove, inspect, clean, and replace as needed.
13. Connect the batteries.

20.01 Mirror Folding Check 172
20.02 Cab Shock Absorber Bracket Torque Check 172
20.03 Aerodynamic Component Inspection 172

20. Cab

20.01 Mirror Folding Check

For vehicles with folding main mirrors, make sure that the mirrors fold freely on the pivot points. Pivot each mirror fully forward and backward two times to break loose any debris that may affect the fold-away feature of the mirror.

20.02 Cab Shock Absorber Bracket Torque Check

1. Apply the parking brake and chock the tires.
2. Check the torque on the upper bolt that attaches the shock absorber upper bracket to the cab. If loose, tighten the bolt 34 lbf·ft (46 N·m). See Fig.103,Cab Shock Absorber and Upper Bracket.
3. From behind the cab skin, check the torque of each of the two lower nuts that attach shock absorber upper bracket to the cab, while holding the bolt in place with a box wrench. If loose, tighten the nuts 34 lbf·ft (46 N·m).

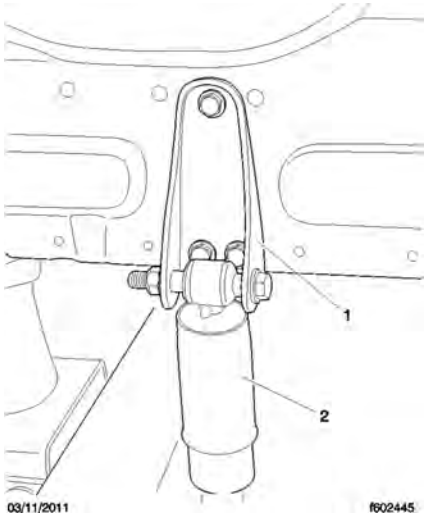

1. Upper Bracket
2. Shock Absorber

Fig 103, Cab Shock Absorber and Upper Bracket

20.03 Aerodynamic Component Inspection

Inspect aerodynamic components, if equipped, for structural damage, cracks, or wear. These may include:

- Chassis fairings
- Battery access kickplate
- Side skirts
- Cab side extenders
- Roof fairing/deflector
- Bumper
- Hood

Replace or repair damaged or missing components as needed.

21.01 Safety Precautions 174
21.02 Air Conditioner Inspection 174
21.02.01 Preliminary Checks 174
21.03 Air Filter Replacement 175
21.03.01 General Information 175
21.03.02 Replacement of the Cab Fresh-Air Filter 176
21.03.03 Replacement of the Cab Recirculation-Air Filter 177
21.03.04 Replacement of the Sleeper Air Filter 178

21. Heater and Air Conditioner

21.01 Safety Precautions

Safety precautions in this section apply to all procedures within this group.

NOTE: When working on the vehicle, shut down the engine or motor, set the parking brake, and chock the tires. Before working under the vehicle, always place jack stands under the frame rails to ensure the vehicle cannot drop. Failure to follow these steps could result in serious personal injury or death.

21.02 Air Conditioner Inspection

21.02.01 Preliminary Checks



WARNING:

Wear eye protection, gloves, and protective clothing when working on the air conditioning system. Leaking refrigerant from a damaged hose or line could cause blindness or serious skin burns.

1. Park the vehicle on a level surface, shut down the engine, apply the parking brakes, and chock the tires.
2. Check the appearance of the air conditioner compressor pulley assembly. If the friction surface of the pulley shows signs of excessive grooving due to belt slippage, replace both the pulley and the drive plate. Inspect the refrigerant compressor drive belt for damage and check that the belt is set at the proper tension. Also check the tightness of the compressor mounting fasteners. For instructions and torque values, see of the **57X Workshop Manual**.
3. Inspect the drive plate. If the drive plate shows visible signs of damage due to excessive heat, replace the drive plate and pulley assembly. For removal and installation procedures, see of the **57X Workshop Manual**.
4. Using a feeler gauge, check that the drive plate clutch clearance is within limits. See Table.39,Compressor Drive-Plate Clutch Clearance for clearance specifications. See Fig.104,Valeo Drive Plate Clutch Air Gap for the checking method. If the drive plate clutch requires adjustment, see of the **57X Workshop Manual**.



NOTE: Check clearance in three equally spaced places.

Fig 104, Valeo Drive Plate Clutch Air Gap

Table 39, Compressor Drive-Plate Clutch Clearance

Compressor Drive-Plate Clutch Clearance	
Manufacturer	**Clearance: in (mm)**
Valeo	0.012 to 0.024 (0.30 to 0.60)

Table 39, Compressor Drive-Plate Clutch Clearance

5. Inspect the compressor clutch coil wire. Check that the connector is not damaged or loose. Replace the wire if it is damaged.
6. Check the overall condition of the air conditioning hoses. Look for cracks, cuts, and abrasions on the hoses. Replace damaged hoses. For replacement instructions, see of the **57X Workshop Manual**. Also check for loose fittings on all of the air conditioning components.
7. Check for a buildup of road debris on the condenser fins. For cleaning instructions, see of the **57X Workshop Manual**.

21.03 Air Filter Replacement

21.03.01 General Information

The HVAC system has three filters that must be replaced periodically to maintain proper system operation. The cabin fresh-air-intake filter is accessed from under the hood, and the recirculation filter is accessed from inside the cab. The sleeper air filter is accessed through an access panel on the cabinet behind the driver's seat.

21.03.02 Replacement of the Cab Fresh-Air Filter

IMPORTANT: When replacing the air filter, use only a Western Star-approved air filter.

1. Park the vehicle on a level surface, shut down the engine, and set the parking brake. Chock the tires.
2. Open the hood.
3. Remove the self tapping screw.
4. Remove the intake filter access panel. Slide it down until it comes loose. See Fig.105,Intake Filter Access Panel.

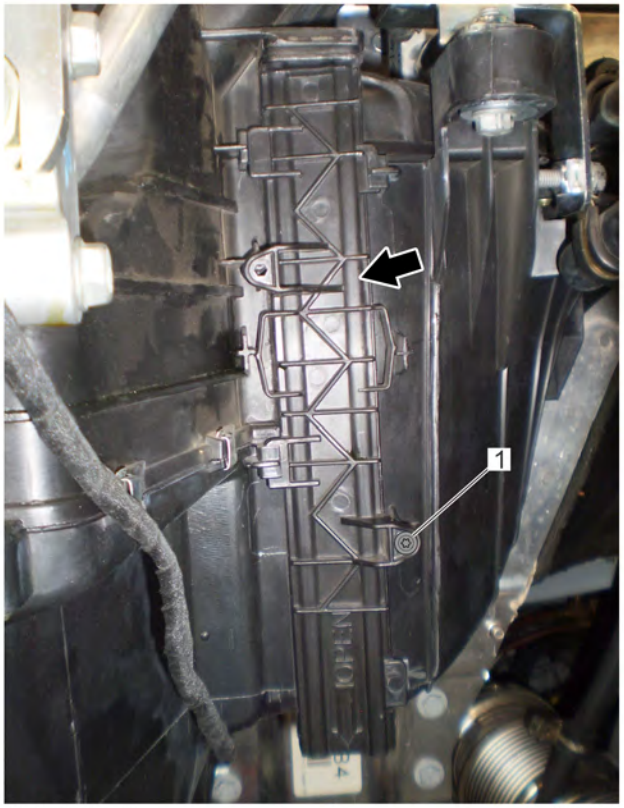

1. Self Tapping Screw

Fig 105, Intake Filter Access Panel

5. Remove the filter from the slot. Note the airflow directional arrow on the filter's edge. When properly installed, the airflow arrow will point inboard, toward the engine. See Fig.106,Airflow Directional Arrow.

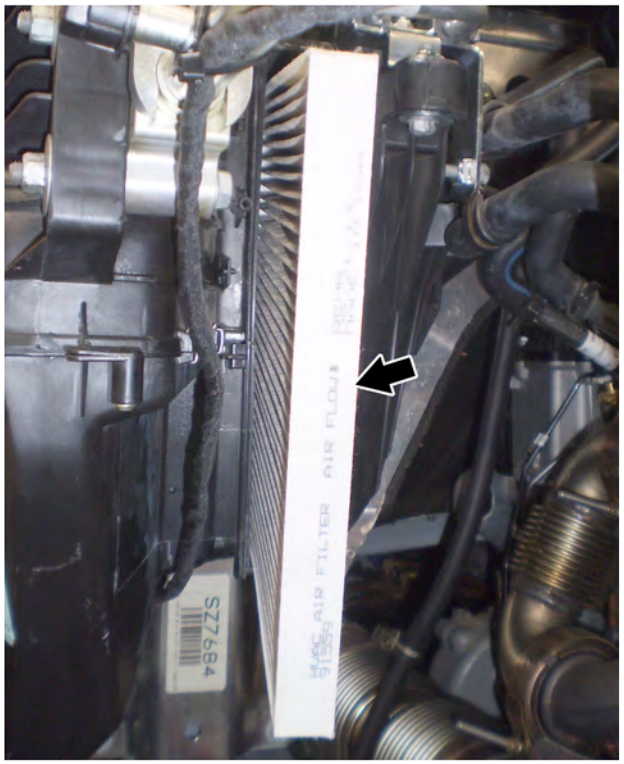

04/13/2016 f090526

1. Airflow Directional Arrow

Fig 106, Airflow Directional Arrow

6. Put a new filter in the slot, making sure the airflow arrow is correctly oriented, and install the access panel. Make sure the access panel locks into position.
7. Install a new self tapping screw (part number: 23-12187-050). Tighten the screw 12 to 17 lbf·in (136 to 192 N·cm). See Fig.105,Intake Filter Access Panel.

21.03.03 Replacement of the Cab Recirculation-Air Filter

The recirculation air filter is located on the evaporator housing facing the interior of the cab just to the right of center. It is accessed from the underside of the unit. It is a coarse sponge, or fiber, filter. See Fig.107,Cab Recirculation Air Filter.



1. Filter

Fig 107, Cab Recirculation Air Filter

IMPORTANT: When replacing the air filter, use only a Western Star-approved air filter.

1. Park the vehicle on a level surface, shut down the engine, and set the parking brake. Chock the tires.
2. Remove the dash front right-hand access panel.
3. Remove the filter.
4. Install the new filter.
5. Install the access panel.

21.03.04 Replacement of the Sleeper Air Filter

In vehicles with 60-inch and 72-inch sleepers, the sleeper air filter is located on the forward side of the blower fan housing, under the cabinet, directly behind the driver's seat. In vehicles with 48-inch sleepers, the sleeper air filter is located on the forward side of the blower fan housing, under the bunk, directly behind the driver's seat.

IMPORTANT: When replacing the air filter, use only a Western Star-approved air filter.

1. Park the vehicle on a level surface, set the parking brake, and shut down the engine. Chock the tires.
2. In vehicles with 60-inch and 72-inch sleepers, remove the sleeper HVAC access panel on the inboard side of the cabinet. See Fig.108,Sleeper HVAC Access Panel, 60- and 72-inch Sleepers. The panel is held in place with four spring clips. Pull straight out to remove it.

   In vehicles with 48-inch sleepers, raise the lower bunk, and lift the access panel. See Fig. 109,Sleeper HVAC Access Panel, 48-inch Sleeper.

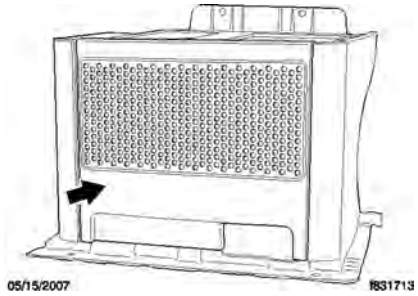

Fig 108, Sleeper HVAC Access Panel, 60- and 72-inch Sleepers

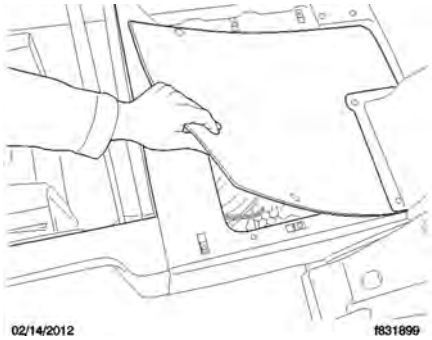

Fig 109, Sleeper HVAC Access Panel, 48-inch Sleeper

3. Lift the filter out of the slot. See Fig.110,Removing the Filter, 60- and 72-inch Sleepers for 60- and 72-inch sleepers, or Fig.111,Removing the Filter, 48-inch Sleeper for 48-inch sleepers.

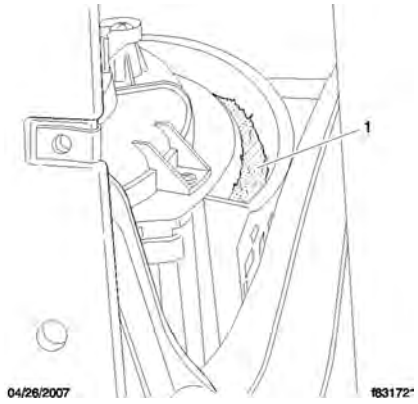

1. Filter

Fig 110, Removing the Filter, 60- and 72-inch Sleepers

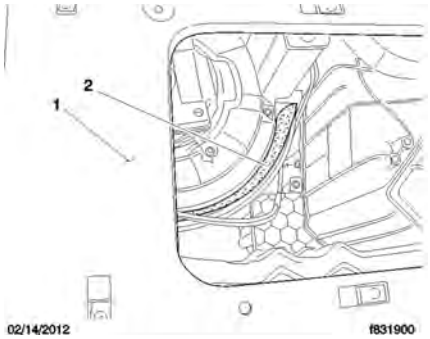

1. Bunk Frame Upper Surface
2. Filter

Fig 111, Removing the Filter, 48-inch Sleeper

4. Install a new filter in the slot, making sure that it is completely seated in the slot.
5. Install the access panel.

CONTACT INFORMATION

For questions, please create a Service Technical Request using the DTTS Application on the DTNA Portal.

Published by
Daimler Trucks North America LLC
4747 N. Channel Ave.
Portland, OR 97217
Printed in U.S.A.