47X, 48X and 49X Driver's Manual

Models: 47X
49X
47X RHD
49X RHD

STI-506-1, ()

Published by
Daimler Trucks North America LLC
4747 N. Channel Ave.
Portland, OR 97217
Printed in U.S.A.

Table of Contents

1. Foreword....5
2. Vehicle Identification....9
3. Vehicle Access....23
4. Instruments....43
5. Driver Controls....105
6. Driver Assistance Features....135
7. Climate Controls....193
8. Seats and Restraints....203
9. Cab and Sleeper Features....221
10. Electrical System....229
11. Engine Starting, Operation, and Shutdown....245
12. Optional Engine Systems....255
13. Emissions and Fuel Efficiency....263
14. Brake Systems....277
15. Steering System....291
16. Automated and Automatic Transmissions....293
17. Manual Transmissions and Clutch....323
18. Drive Axles....327
19. Fifth Wheels....335
20. Trailer Couplings....361
21. Headlights....369
22. Vehicle Appearance and Care....377
23. Pre- and Post-Trip Checklists....383
24. Pre- and Post-Trip Inspections and Maintenance....389
25. In An Emergency....413
26. Telematics Data....429

Chapter 1 Foreword 1.0

1.01 Customer Assistance Center....6
1.02 Environmental Concerns and Recommendations....6
1.03 Data Logging....6
1.04 Emissions and Fuel Efficiency Compliance....6
1.05 Reporting Safety Defects....6

1. Foreword

1.01 Customer Assistance Center

Having trouble finding service? Call the Customer Assistance Center at 1-866-850-7827 or 1-866-850-STAR. For dealer referrals and breakdown support, call night or day, weekdays or weekends. For specification requests and all other concerns and inquiries, the Customer Assistance Center is available 5:00 A.M. to 4:00 P.M. PST Monday through Friday. Our people are knowledgeable, professional, and committed to following through to help you keep your truck moving.

1.02 Environmental Concerns and Recommendations

Whenever you see instructions in this manual to discard materials, you should first attempt to reclaim and recycle them. To preserve our environment, follow appropriate environmental rules and regulations when disposing of materials.

1.03 Data Logging

This vehicle is equipped with a control module that performs data logging capabilities.

This vehicle is equipped with one or more devices that record specific vehicle data and may perform some of the same functionality as a regulated Event Data Recorder but the device(s) are not subject to, nor designed pursuant to, 49 C.F.R. Part 563.

The type and amount of data recorded varies depending on how the vehicle is equipped (such as the brand of engine, if an air bag is installed, or if the vehicle features a collision avoidance system, etc.). GPS location data, fault codes, and other technical data may be recorded.

This data may help provide a better understanding of the circumstances of a crash.

Personal data such as name, gender, and age are not recorded. However, other parties such as law enforcement, could combine the data logger's contents with the type of personally identifying data routinely acquired during a crash investigation.

1.04 Emissions and Fuel Efficiency Compliance

This vehicle must be regularly inspected and maintained as indicated in the *Western Star Maintenance Manual* , and in the *Pre- and Post-Trip Inspections and Maintenance* chapter in this manual, in order to continue satisfactory performance and ensure coverage of the vehicle under the manufacturer's warranty.

Many maintenance procedures ensure that the vehicle and engine continue to comply with applicable emissions standards. Maintenance procedures, using components engineered to comply with greenhouse gas emissions and fuel efficiency regulations, may be performed by an authorized Daimler Truck North America dealer, an independent outlet, or the vehicle owner or operator.

The vehicle owner is responsible for determining the suitability of replacement components to maintain compliance with federal and local jurisdictional regulations. Components including, but not limited to, tires, cab/sleeper side extenders, chassis fairings, bumper, hood, vehicle speed limiters, and idle reduction timers are specifically designed and manufactured to exacting standards for regulatory fuel efficiency and greenhouse gas emissions compliance. It is important that these components are always replaced with components that meet or exceed the performance of the originally installed components.

1.05 Reporting Safety Defects

Vehicles domiciled in the USA that are thought to have a defect that could cause a crash, injury, or death, should immediately be reported to the National Highway Traffic Safety Administration (NHTSA) and Daimler Truck North America LLC.

If the NHTSA receives similar complaints, it may open an investigation; if it finds that a safety defect exists in a group of vehicles, it may order a recall and remedy campaign. However, NHTSA cannot become involved in individual problems between you, your dealer, or Daimler Truck North America LLC.

To contact NHTSA, call the Vehicle Safety Hotline toll-free at 1-888-327-4236 (TTY: 1-800-424-9153).

To e-mail NHTSA, go to www.safertruck.gov/ .

You can contact NHTSA by mail at: Administrator, NHTSA Headquarters, 1200 New Jersey Avenue SE, West Building, Washington, DC 20590.

For more information about motor vehicle safety, go to **www.safertruck.gov/**.

To contact Western Star about a concern about a specific vehicle call the Customer Assistance Center at 1-866-850-STAR or complete a Product Concern Form .

Vehicles domiciled in Canada that are thought to have a defect that could cause a crash, injury, or death, should immediately be reported to Transport Canada and Daimler Truck North America LLC.

If Transport Canada receives similar complaints, it may open an investigation; if it finds that a safety defect exists in a group of vehicles, it may order a recall and remedy campaign. However, Transport Canada cannot become involved in individual problems between you, your dealer, or Daimler Truck North America LLC.

To contact Western Star about a concerns about a specific vehicle call the Customer Assistance Center at 1-866-850-STAR or complete a Product Concern Form .

To contact Transport Canada, call the Defect Investigations and Recalls Division toll-free in Canada at 1-800-333-0510 or 819-994-3328 in the Gatinuau-Ottawa area or internationally.

You can also contact Transport Canada by mail at: Transport Canada, 330 Sparks Street, Ottawa, Ontario, K1A 0N5 Canada.

The following websites contain more information on Canadian recalls:

English: **www.tc.gc.ca/recalls**.

French: **www.tc.gc.ca/rappels**.

For additional road safety information, please visit the Road Transportation website:

English: **www.tc.gc.ca/en/services/road**

French: **www.tc.gc.ca/fr/services/routier**

© 2022–2023 Daimler Truck North America LLC. All rights reserved. Daimler Truck North America LLC is a Daimler company.

No part of this publication, in whole or part, may be translated, reproduced, stored in a retrieval system, or transmitted in any form by any means, electronic, mechanical, photocopying, recording, or otherwise, without the prior written permission of Daimler Truck AG. For additional information, please contact Daimler Truck AG, Service Systems and Documentation, P. O. Box 3849, Portland OR 97208–3849 U.S.A. or refer to https://northamerica.daimlertruck.com/ and www.WesternStar-Trucks.com/ .

2.01 Component Information Label 10
2.02 Component GWR Label 10
2.03 FMVSS Certification Label 11
2.04 Canadian Certification Label 14
2.05 Emissions Labels 15
2.05.01 Aftertreatment System Indicators Label 15
2.05.02 EPA Noise Emission Control Label 17
2.05.03 Vehicle Emission Control Information Label 18
2.05.04 Certified Clean Idle Label 20
2.06 Customer Assistance Label 20

2. Vehicle Identification

2.01 Component Information Label

NOTE: Labels shown in this chapter are examples only. Actual specifications may vary from vehicle to vehicle.

The component information label lists the vehicle model, identification number, and major component models and serial numbers. See Fig. 1,Component Information Label. The component information label is attached inside the glove box. In vehicles without a glove box, the label is attached to the underside of the driver's sun visor.

Fig 1, Component Information Label

2.02 Component GWR Label

NOTE: Vehicles manufactured for the Canadian market will have a Canadian Compliance label instead of a component GWR label.

The component GWR label provides maximum GWR ratings for each component. See Fig. 2,Component GWR Label for a typical component GWR label.

If applied, the component GWR label is located on the right-hand B-pillar. See Fig. 3,Label Locations.

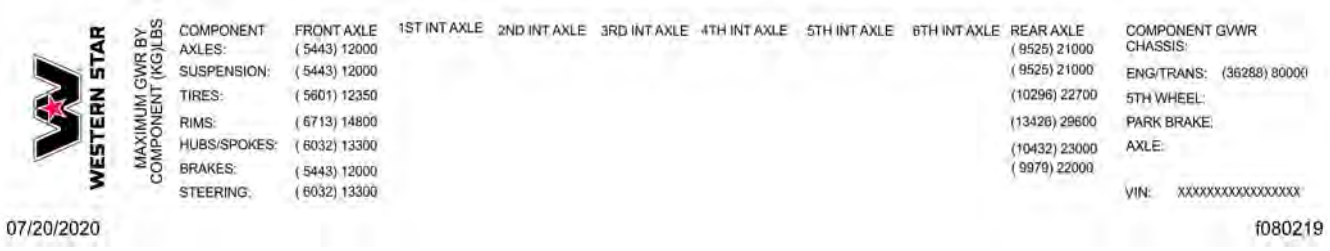

Fig 2, Component GWR Label

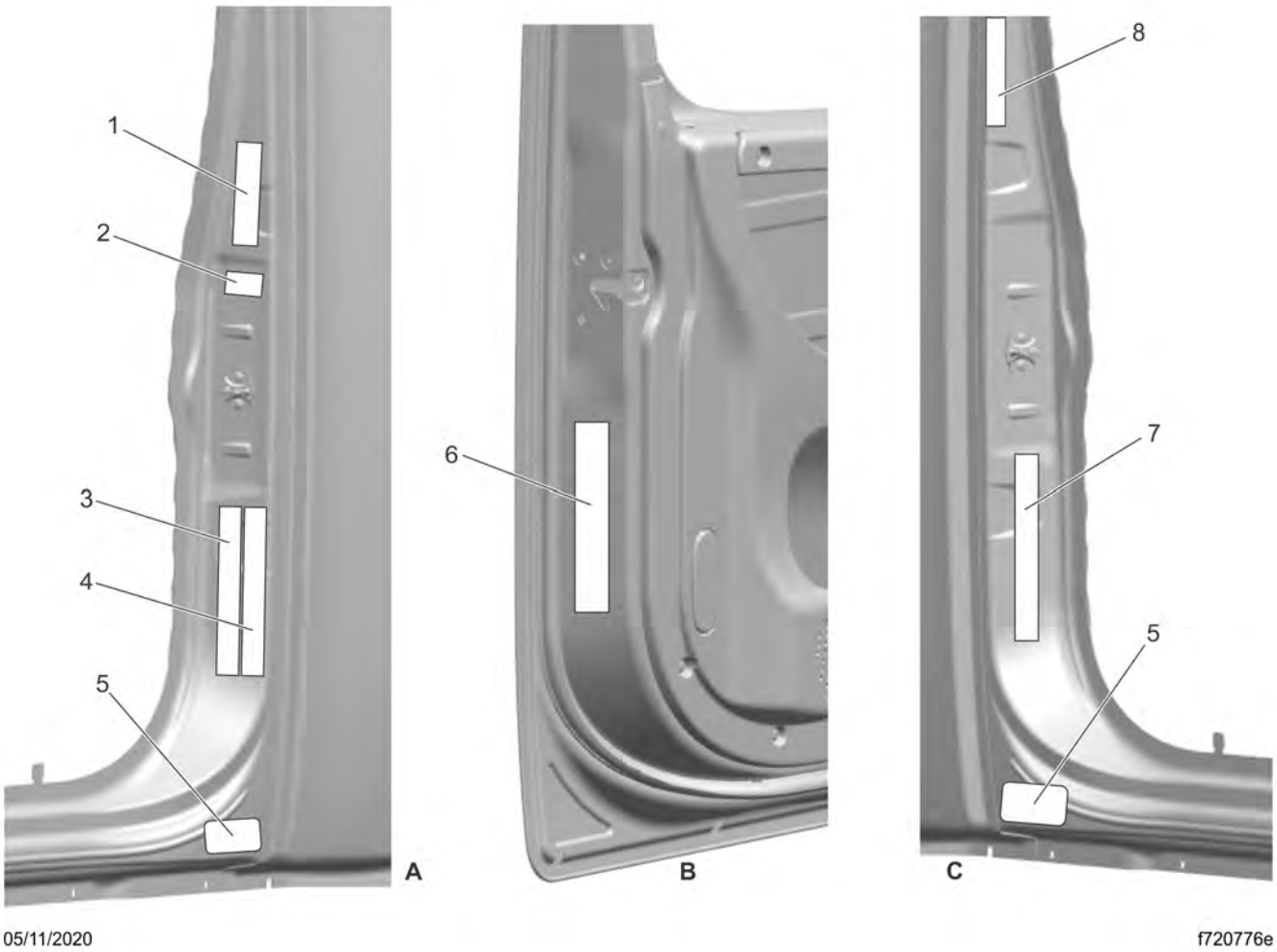

A. Left-Hand B-Pillar
B. Left-Hand Door
C. Right-Hand B-Pillar
1. EPA Noise Emission Control Label
2. Customer Assistance Label
3. FMVSS Certification Label
4. Canadian Certification Label
5. Entry/Exit Warning Decal
6. Vehicle Emission Control Information Label
7. Component GWR Label
8. Mexico Certification Label*
9. *On vehicle domiciled in Mexico

Fig 3, Label Locations

2.03 FMVSS Certification Label

NOTE: Due to the variety of Federal Motor Vehicle Safety Standard (FMVSS) certification requirements, not all of the labels shown will apply to your vehicle.

Tractors with or without fifth wheels purchased in the U.S. are marked as certified by means of an FMVSS certification label. See Fig. 4,Vehicle Certification Label. This label is attached to the left-hand B-pillar, as shown in Fig. 5,Label Locations.

WESTERN STAR

MANUFACTURED BY: DAIMLER TRUCKS N.A. LLC
DATE OF MFR: 04/19
GVWR/PNBV-KG: 24,140
GVWR/PNBV-LBS: 53,220
THIS VEHICLE COMPLIES WITH ALL APPLICABLE FEDERAL MOTOR VEHICLE SAFETY STANDARDS IN EFFECT AT THE DATE OF MANUFACTURE SHOWN ABOVE.
VEHICLE ID NO: XXXXXXXXXXXXXXXXX
CAN ICES-2 / NMB-2 TYPE: TRUCK/TRACTOR TT/CT
COUNTRY OF ORIGIN: U.S.A.

	GAWR/PNBE KGS	GAWR/PNBE LBS	TIRES	RIMS	KPA COLD	PSI COLD	"S"
FRONT AXLE:	5,996	13,220	11R22.5(H)	22.5X8.25	827	120	S
1ST INT AXLE:	9,072	20,000	11R22.5(G)	22.5X8.25	724	105	D
2ND INT AXLE:							
3RD INT AXLE:							
4TH INT AXLE:							
5TH INT AXLE:							
6TH INT AXLE:							
REAR AXLE:	9,072	20,000	11R22.5(G)	22.5X8.25	724	105	D

08/03/2020 f080206

Fig 4, Vehicle Certification Label

The tire and rim portion of the FMVSS certification label certifies suitable tire and rim combinations that can be installed on the vehicle, for the given gross axle weight rating. Tires and rims installed on the vehicle at the time of manufacture may have a higher load capacity than that certified by the tire and rim label.

If the tires and rims currently on the vehicle have a lower load capacity than that shown on the tire and rim label, then the tires and rims determine the load limitations on each of the axles.

Tractors built without a fifth wheel that are intended for service in the U.S. have an incomplete vehicle certification label and a final certification label attached by the final-stage manufacturer. See Fig. 6,Incomplete Vehicle Certification Label. The incomplete vehicle document included with the vehicle certifies that the vehicle conforms to all applicable FMVSS regulations in effect on the date of completion.

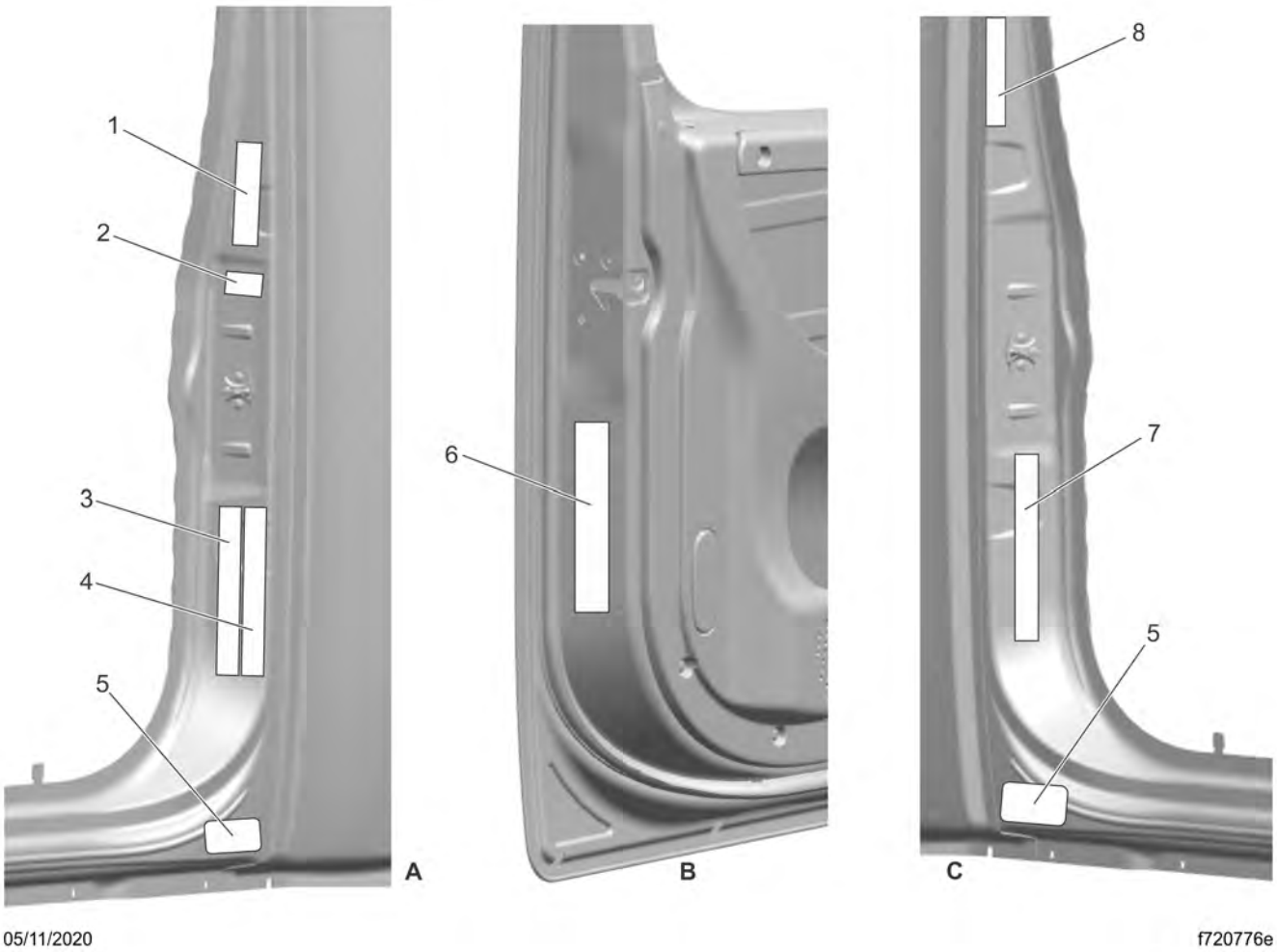

A. Left-Hand B-Pillar
B. Left-Hand Door
C. Right-Hand B-Pillar
1. EPA Noise Emission Control Label
2. Customer Assistance Label
3. FMVSS Certification Label
4. Canadian Certification Label
5. Entry/Exit Warning Decal
6. Vehicle Emission Control Information Label
7. Component GWR Label
8. Mexico Certification Label*
9. *On vehicle domiciled in Mexico

Fig 5, Label Locations

Fig 6, Incomplete Vehicle Certification Label

2.04 Canadian Certification Label

Complete tractors with fifth wheels manufactured for Canada or dual Canadian/United States operations, are marked with a Canada Certification label. See Fig. 8,Canada Certification Label. This is attached to the driver-side door B-pillar as shown in Fig. 9,Label Locations callout 4.

Trucks built without a cargo body and tractors built without a fifth wheel that are intended for service in Canada have an incomplete Canadian Certification label attached to the left-hand B-pillar. After completion of the vehicle, a complete compliance label must be attached by the final-stage manufacturer to certify that the vehicle conforms to all applicable Canada Motor Vehicle Safety Standard (CMVSS) regulations in effect on the date of completion.

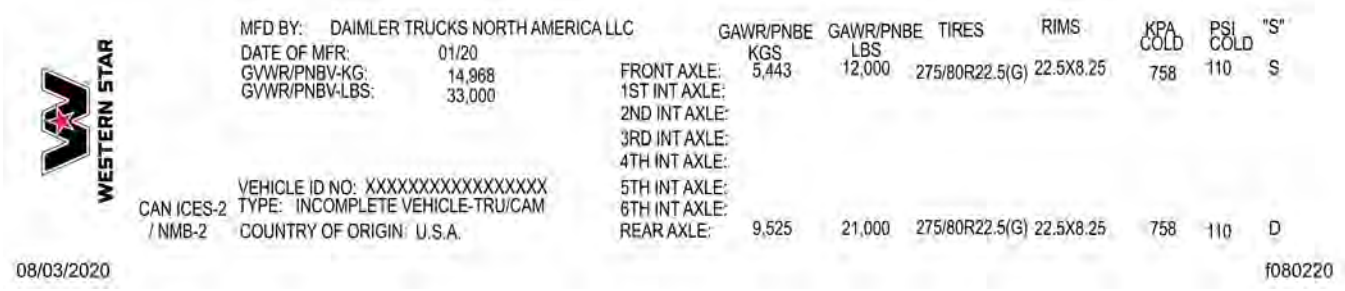
WESTERN STAR

MFD BY: DAIMLER TRUCKS NORTH AMERICA LLC
DATE OF MFR: 01/20
GVWR/PNBV-KG: 14,968
GVWR/PNBV-LBS: 33,000

VEHICLE ID NO: XXXXXXXXXXXXXXXXX
TYPE: INCOMPLETE VEHICLE-TRU/CAM
COUNTRY OF ORIGIN: U.S.A.

CAN ICES-2 / NMB-2

	GAWR/PNBE KGS	GAWR/PNBE LBS	TIRES	RIMS	KPA COLD	PSI COLD	"S"
FRONT AXLE:	5,443	12,000	275/80R22.5(G)	22.5X8.25	758	110	S
1ST INT AXLE:							
2ND INT AXLE:							
3RD INT AXLE:							
4TH INT AXLE:							
5TH INT AXLE:							
6TH INT AXLE:							
REAR AXLE:	9,525	21,000	275/80R22.5(G)	22.5X8.25	758	110	D

08/03/2020 f080220

Fig 7, Incomplete Vehicle Certification Label

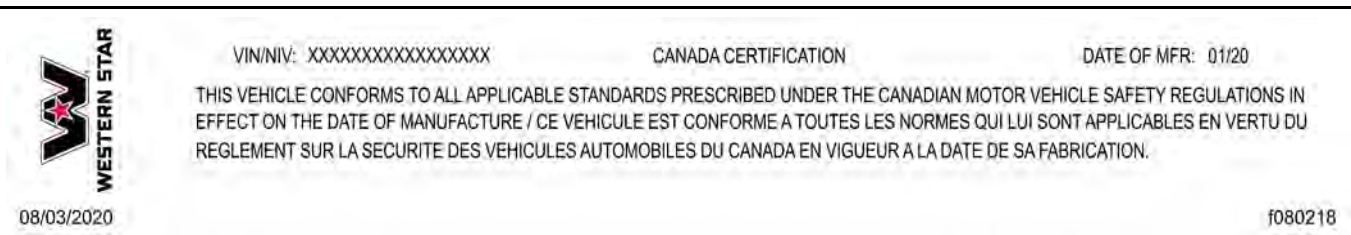
WESTERN STAR

VIN/NIV: XXXXXXXXXXXXXXXXX CANADA CERTIFICATION DATE OF MFR: 01/20

THIS VEHICLE CONFORMS TO ALL APPLICABLE STANDARDS PRESCRIBED UNDER THE CANADIAN MOTOR VEHICLE SAFETY REGULATIONS IN EFFECT ON THE DATE OF MANUFACTURE / CE VEHICULE EST CONFORME A TOUTES LES NORMES QUI LUI SONT APPLICABLES EN VERTU DU REGLEMENT SUR LA SECURITE DES VEHICULES AUTOMOBILES DU CANADA EN VIGUEUR A LA DATE DE SA FABRICATION.

08/03/2020 f080218

Fig 8, Canada Certification Label

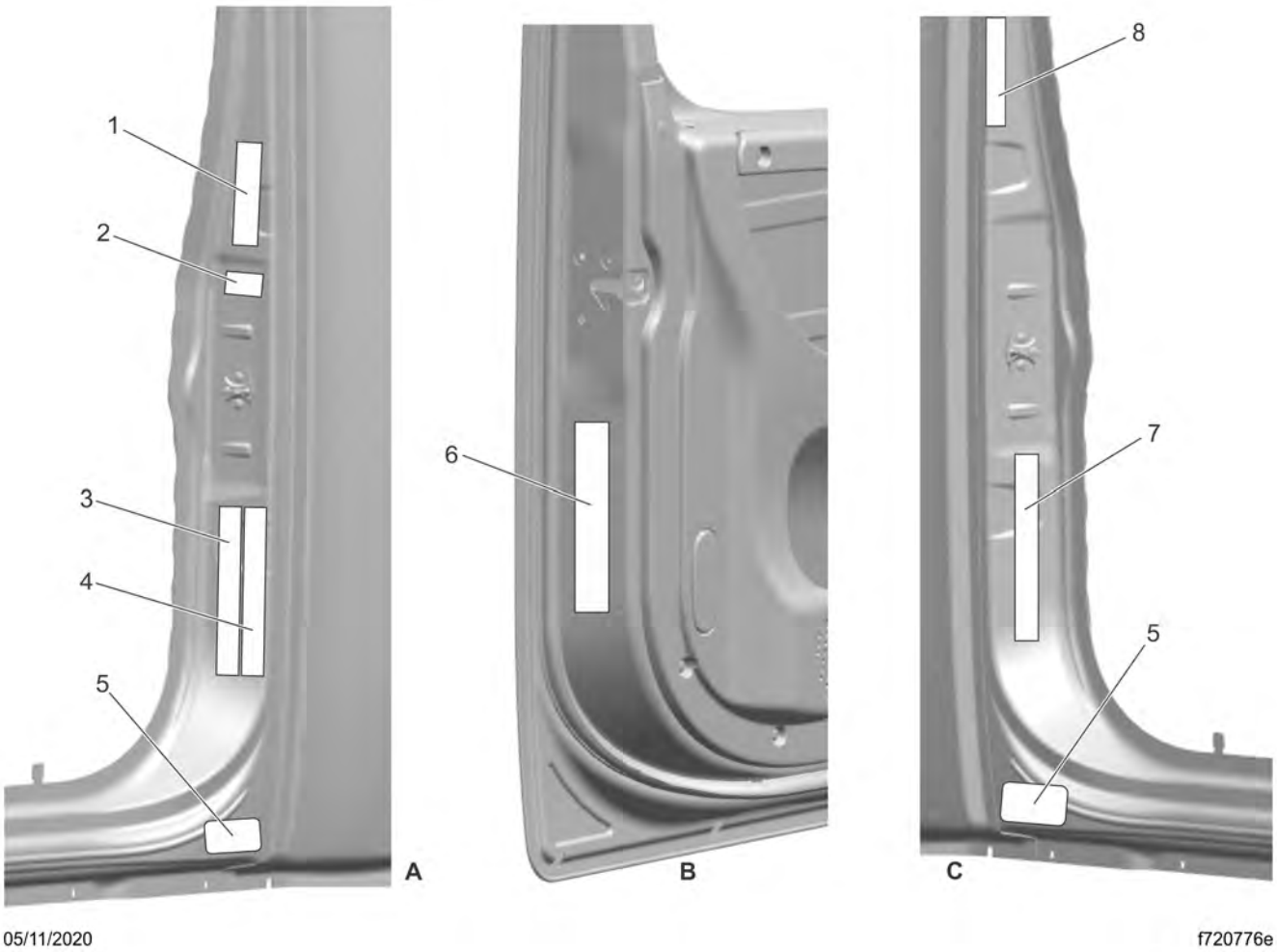

A. Left-Hand B-Pillar
B. Left-Hand Door
C. Right-Hand B-Pillar
1. EPA Noise Emission Control Label
2. Customer Assistance Label
3. FMVSS Certification Label
4. Canadian Certification Label
5. Entry/Exit Warning Decal
6. Vehicle Emission Control Information Label
7. Component GWR Label
8. Mexico Certification Label*
9. *On vehicle domiciled in Mexico

Fig 9, Label Locations

2.05 Emissions Labels

2.05.01 Aftertreatment System Indicators Label

Model year 2007 and later diesel engines in vehicles domiciled in the U.S. or Canada are required to meet all EPA exhaust gas emission regulations effective as per the applicable emission model year, and are equipped with an emission aftertreatment system (ATS).

Vehicles domiciled outside of the U.S. and Canada may not have aftertreatment equipment, depending upon local statutory emissions guidelines. See Table 1,EPA Regulations and Table 2,Emission Regulations by Model Year at the end of this chapter for additional information on what EPA and GHG regulations apply to different model years. See Fig. 10,ATS Indicators, EPA10 and Newer.for information on the driver’s visor warning label for important warning indicators in the instrument cluster that pertain to the ATS.

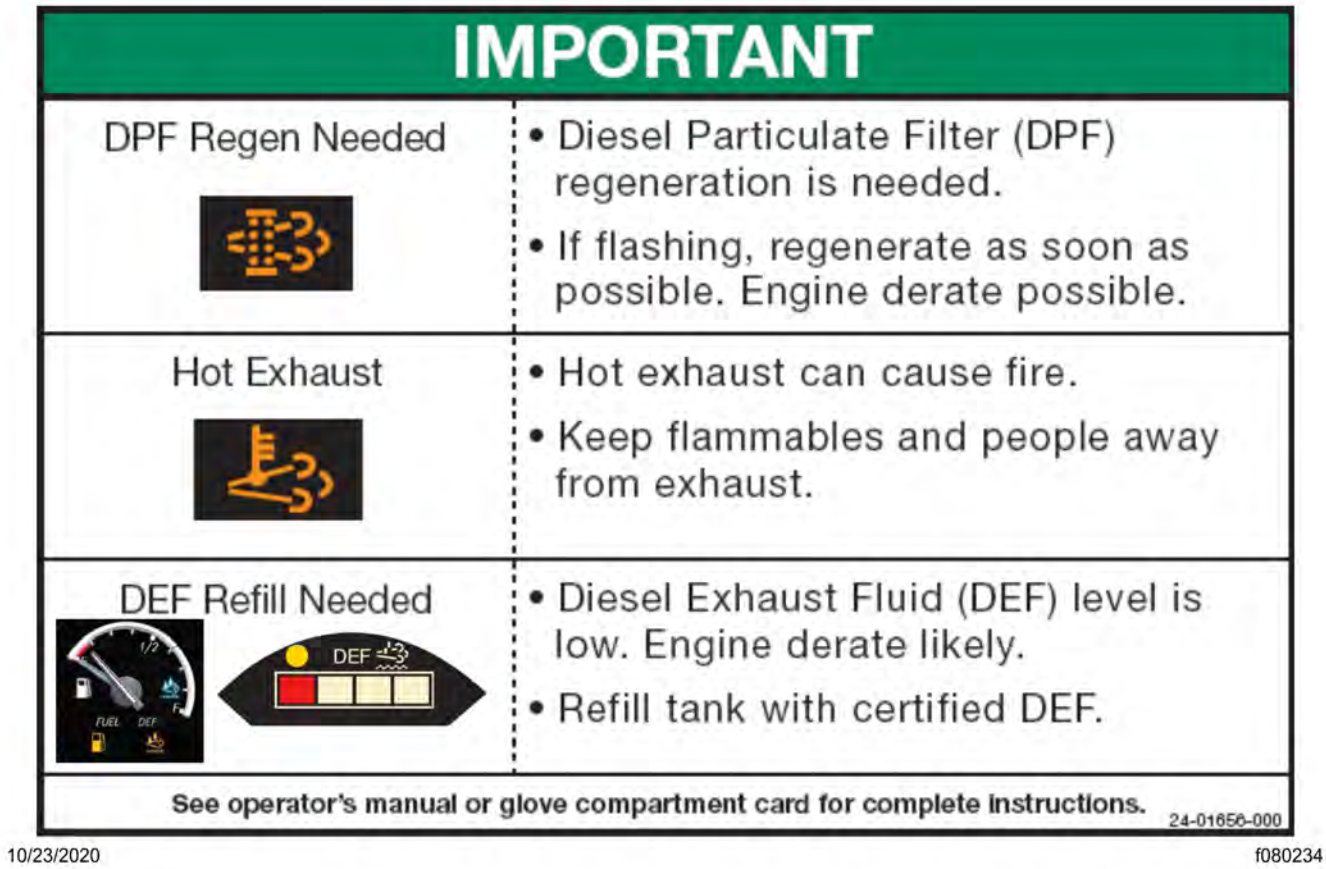

Fig 10, ATS Indicators, EPA10 and Newer

It is a violation of U.S. federal law to alter exhaust plumbing, ATS, or other components in any way that would bring the engine/vehicle out of compliance with certification requirements [Ref: 42 U.S.C. S7522(a) (3)]. It is the owner's responsibility to maintain the vehicle so that it conforms to EPA regulations.

Table 1, EPA Regulations

Regulation	Emissions Components
EPA10 (Reduction of NOx emissions to 0.2 g/bhp-hr)	EPA07-type ATD, with additional selective catalyst reduction (SCR) technology that utilizes diesel exhaust fluid (DEF) to convert NOx to nitrogen and water vapor.
GHG17	Fuel efficiency components including, but not limited to, engines, tires, aerodynamic components, vehicle speed limiters, and idle reduction timers specifically designed to meet regulatory fuel efficiency and greenhouse gas emissions standards.
GHG21	GHG14/17 components plus additional components including, but not limited to, transmissions, axles, predictive technologies, idle reduction technologies for vocational vehicles, tire pressure monitoring systems.

Table 1, EPA Regulations

Table 2, Emission Regulations by Model Year

Model Year	Engine Regulation	GHG Regulation
2017–2020	EPA10, GHG17	GHG17
2021–and later	EPA10, GHG21	GHG21

Table 2, Emission Regulations by Model Year

2.05.02 EPA Noise Emission Control Label

A vehicle noise emission control label, shown in Fig. 11,Vehicle Noise Emission Control Label (complete vehicle), is located on the left-hand B-pillar as shown in Fig. 13,Label Locations. It is the owner's responsibility to maintain the vehicle so that it conforms to EPA regulations.

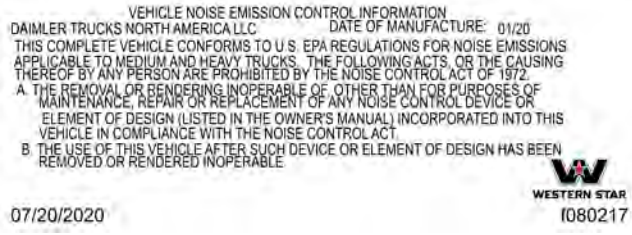

Fig 11, Vehicle Noise Emission Control Label (complete vehicle)

IMPORTANT: Certain Western Star incomplete vehicles may be produced with incomplete noise control hardware. Such vehicles will have an incomplete vehicle noise emission control information label, shown in Fig. 12,Vehicle Noise Emission Control Label (incomplete vehicle). For such vehicles, it is the final-stage manufacturer's responsibility to complete the vehicle in conformity to U.S. or Canadian EPA regulations (40 CFR Part 205) and label it for compliance.

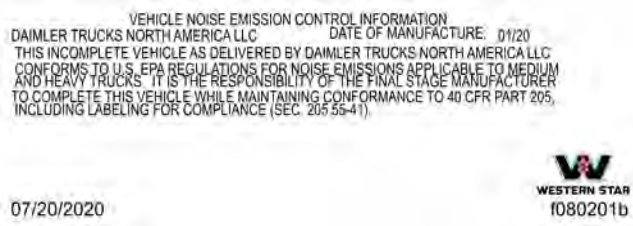

Fig 12, Vehicle Noise Emission Control Label (incomplete vehicle)

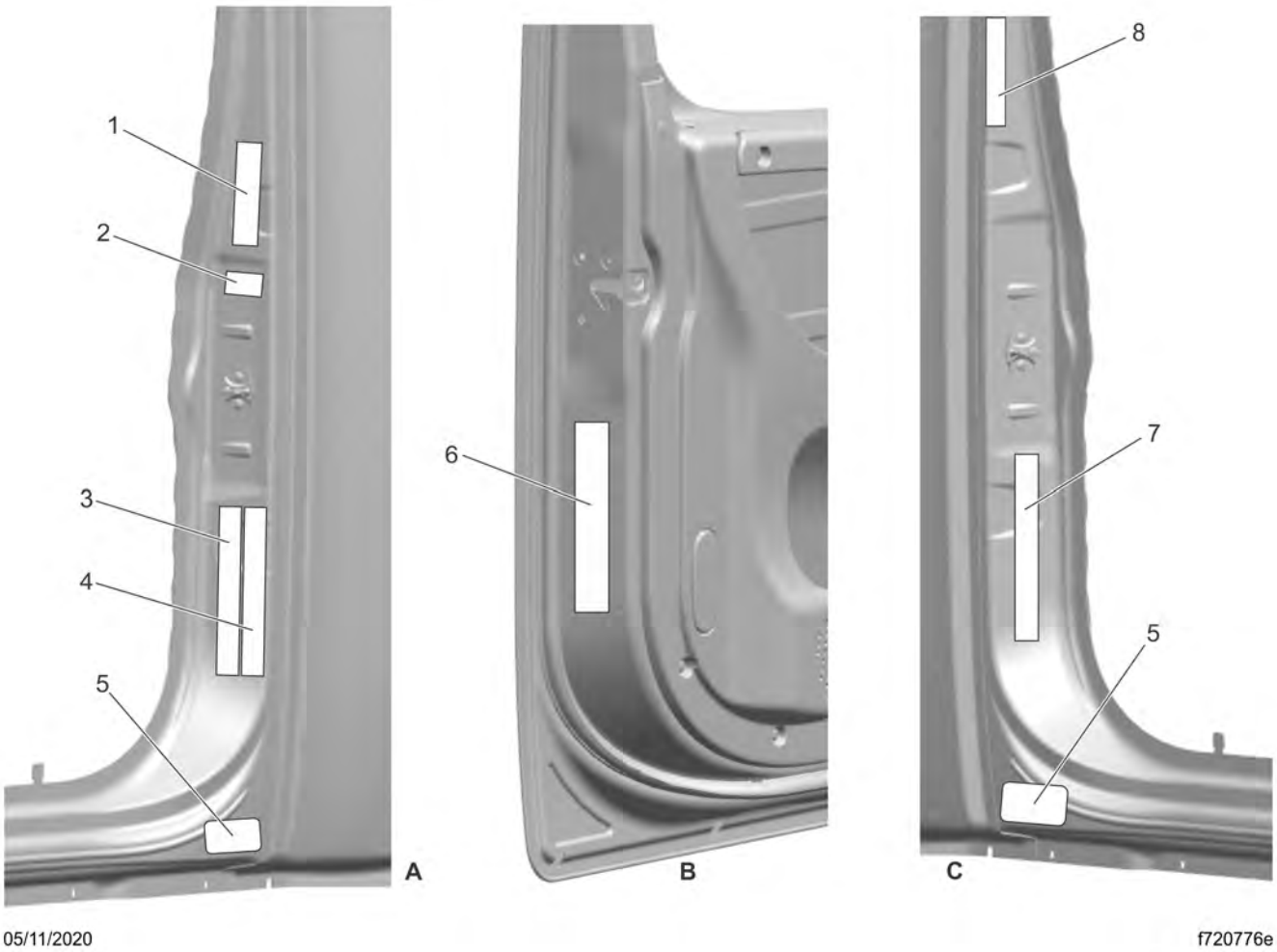

A. Left-Hand B-Pillar
B. Left-Hand Door
C. Right-Hand B-Pillar
1. EPA Noise Emission Control Label
2. Customer Assistance Label
3. FMVSS Certification Label
4. Canadian Certification Label
5. Entry/Exit Warning Decal
6. Vehicle Emission Control Information Label
7. Component GWR Label
8. Mexico Certification Label*
9. *On vehicle domiciled in Mexico

Fig 13, Label Locations

2.05.03 Vehicle Emission Control Information Label

Model year 2020 and later vehicles meet requirements as specified by GHG17 and GHG21 regulations, respectively. These vehicles are equipped with components that increase fuel efficiency and reduce greenhouse gas (GHG) emissions. Components may include, but are not limited to, low-rolling resistance tires; aerodynamic devices such as hood, cab side extenders, and fuel tank fairings; vehicle speed limiters; and idle shutdown timers.

A Vehicle Emission Control Information Label, see Fig. 14,Vehicle Emission Control Information Label, is located on the left-hand door, see Fig. 15,Label Locations. It is the owner's responsibility to maintain the vehicle so that it conforms to EPA and NHTSA regulations.

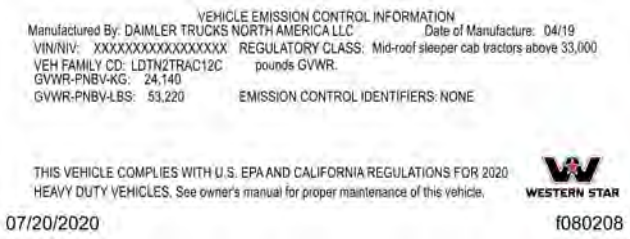
VEHICLE EMISSION CONTROL INFORMATION
Manufactured By: DAIMLER TRUCKS NORTH AMERICA LLC Date of Manufacture: 04/19
VIN/NIV: XXXXXXXXXXXXXXXXX REGULATORY CLASS: Mid-roof sleeper cab tractors above 33,000 pounds GVWR.
VEH FAMILY CD: LDTN2TRAC12C
GVWR-PNBV-KG: 24,140
GVWR-PNBV-LBS: 53,220 EMISSION CONTROL IDENTIFIERS: NONE

THIS VEHICLE COMPLIES WITH U.S. EPA AND CALIFORNIA REGULATIONS FOR 2020 HEAVY DUTY VEHICLES. See owner's manual for proper maintenance of this vehicle.
WESTERN STAR
07/20/2020 f080208

Fig 14, Vehicle Emission Control Information Label

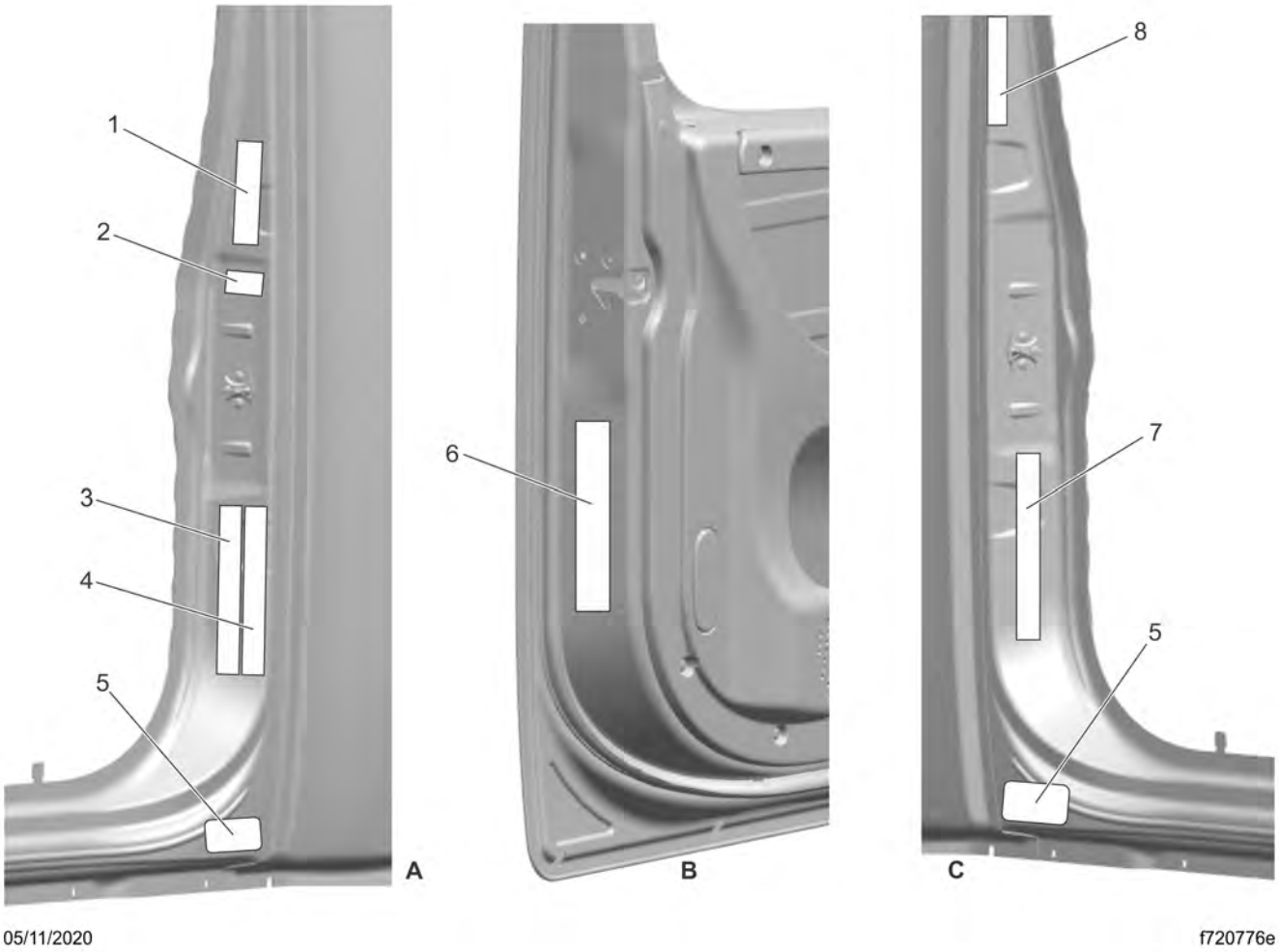

A. Left-Hand B-Pillar
B. Left-Hand Door
C. Right-Hand B-Pillar
1. EPA Noise Emission Control Label
2. Customer Assistance Label
3. FMVSS Certification Label
4. Canadian Certification Label
5. Entry/Exit Warning Decal
6. Vehicle Emission Control Information Label
7. Component GWR Label
8. Mexico Certification Label*
9. *On vehicle domiciled in Mexico

Fig 15, Label Locations

2.05.04 Certified Clean Idle Label

The California Air Resources Board (CARB) requires model year 2008 and newer heavy-duty diesel engines to meet CARB's Heavy-Duty Diesel Engine Idling Requirement in order to limit emissions of particulate matter and NOx. See Fig. 16,CARB Clean Idle Label.

Fig 16, CARB Clean Idle Label

Certified vehicles are equipped with a label placed on the exterior of the left-hand door near the bottom forward edge.

Table 3, EPA Regulations

Regulation	Emissions Components
EPA10 (Reduction of NOx emissions to 0.2 g/bhp-hr)	EPA07-type ATD, with additional selective catalyst reduction (SCR) technology that utilizes diesel exhaust fluid (DEF) to convert NOx to nitrogen and water vapor.
GHG17	Fuel efficiency components including, but not limited to, engines, tires, aerodynamic components, vehicle speed limiters, and idle reduction timers specifically designed to meet regulatory fuel efficiency and greenhouse gas emissions standards.
GHG21	GHG14/17 components plus additional components including, but not limited to, transmissions, axles, predictive technologies, idle reduction technologies for vocational vehicles, tire pressure monitoring systems.

Table 3, EPA Regulations

Table 4, Emission Regulations by Model Year

Model Year	Engine Regulation	GHG Regulation
2017–2020	EPA10, GHG17	GHG17
2021–and later	EPA10, GHG21	GHG21

Table 4, Emission Regulations by Model Year

2.06 Customer Assistance Label

The customer assistance center telephone number is printed on the customer assistance label. The label also includes a QR code encoded with the VIN, readable by dealer apps to bring up information about the vehicle. See Fig. 17,Customer Assistance Label.

Fig 17, Customer Assistance Label

The customer assistance label is located on the left-hand B-pillar, as see 18,Label Locations.

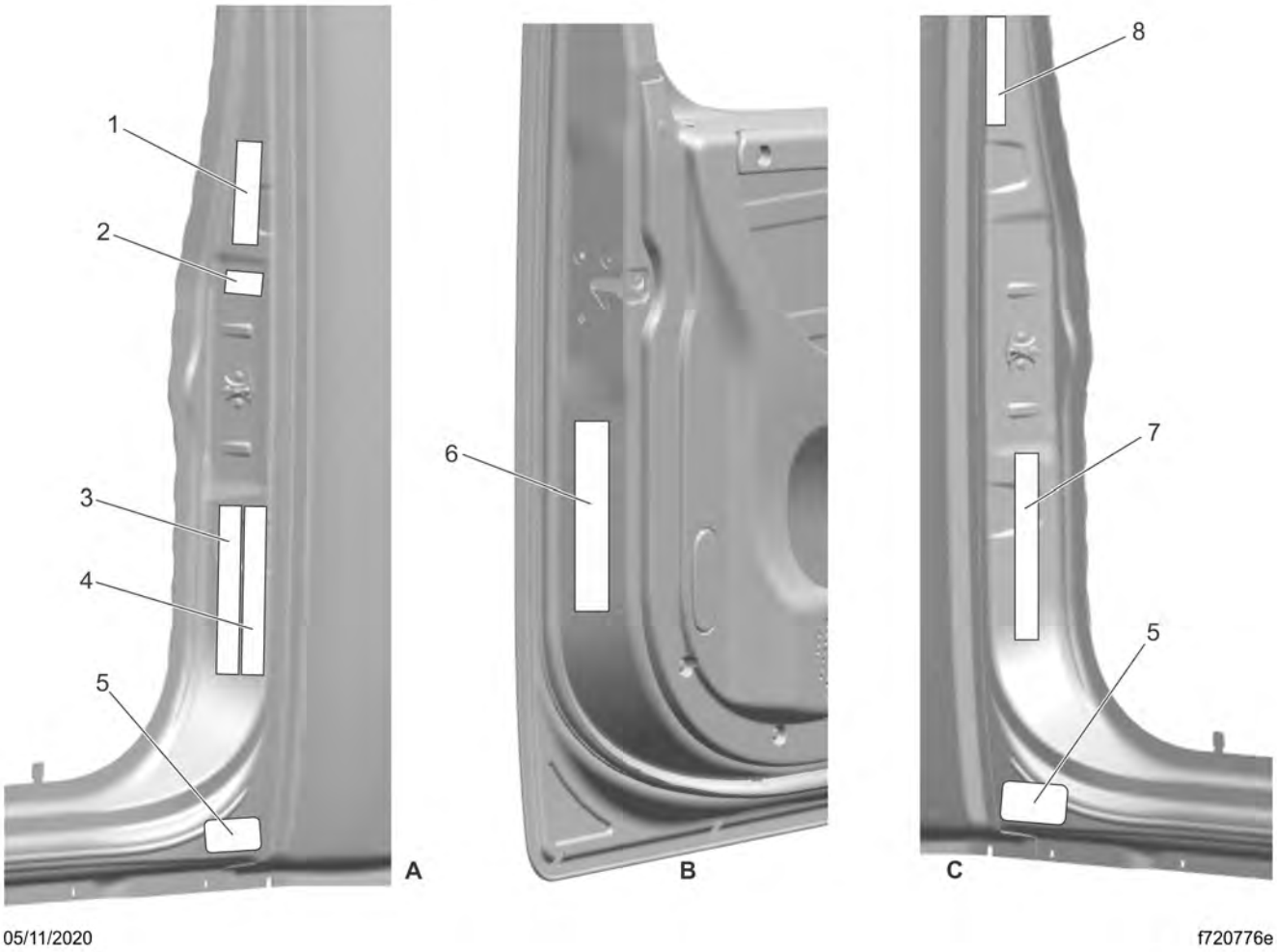

A. Left-Hand B-Pillar
B. Left-Hand Door
C. Right-Hand B-Pillar
1. EPA Noise Emission Control Label
2. Customer Assistance Label
3. FMVSS Certification Label
4. Canadian Certification Label
5. Entry/Exit Warning Decal
6. Vehicle Emission Control Information Label
7. Component GWR Label
8. Mexico Certification Label*
9. *On vehicle domiciled in Mexico

Fig 18, Label Locations

3.01 Door Locks and Handles....24
3.02 Remote Keyless Entry....25
3.02.01 Key Fob Use....25
3.02.02 Replacement of the Key Fob Battery....26
3.02.03 Key Fob Programming....29
3.02.04 Specifications....29
3.03 Grab Handles and Access Steps....30
3.03.01 Entering the Driver Side....30
3.03.02 Exiting the Driver Side....31
3.03.03 Entering the Passenger Side....31
3.03.04 Exiting the Passenger Side....32
3.04 Cab-to-Sleeper Access....33
3.05 Sleeper Tip Out Window and Door....33
3.06 Luggage Door....36
3.07 Back-of-Cab Access....38
3.07.01 General Information....38
3.07.02 Accessing Back-of-Cab Area....39
3.07.03 Exiting Back-of-Cab Area....39
3.08 Hood Opening and Closing....40
3.08.01 General Information....40
3.08.02 Opening the Hood....40
3.08.03 Closing the Hood....41

3. Vehicle Access

3.01 Door Locks and Handles

One common key operates the ignition switch and all of the door locks.

IMPORTANT: Each key is numbered. Record the number so a duplicate key can be made, if needed.

To unlock the driver's door from outside the cab, insert the key in the lockset and turn it one-quarter turn clockwise. See Fig. 19,Exterior Door Handle. To remove the key, turn it counterclockwise to the original position. Pull out on the door pull handle to open the door.

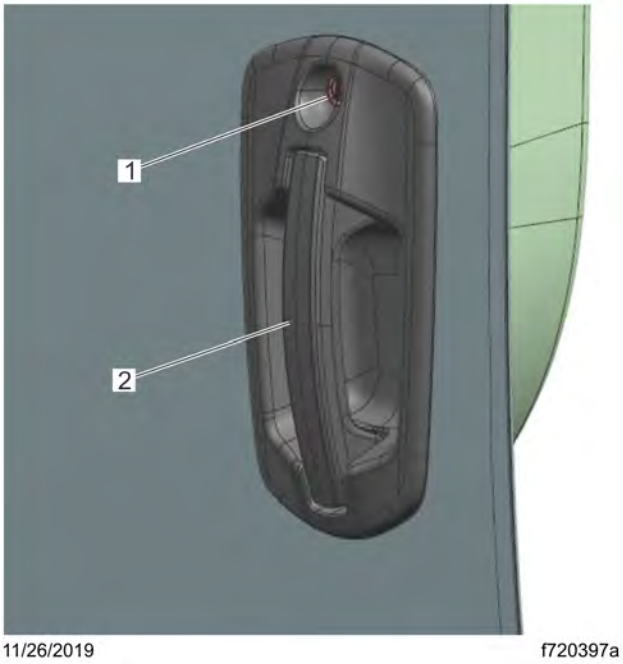

1. Lockset
2. Door Pull Handle

Fig 19, Exterior Door Handle

To unlock the passenger's door from outside the cab, insert the key in the lockset and turn it one-quarter turn counterclockwise. Turn the key clockwise to the original position to remove it.

NOTE: The cab door locks can be operated when the doors are open.

To lock a door from outside the cab, insert the key in the lockset and turn it in the direction opposite to the unlocking direction (counterclockwise for the driver's door, clockwise for the passenger's door). Close the door if it is open.

To lock either door from inside the cab, push the lock button downwards. See Fig. 20,Door Interior.

1. Lock Button
2. Integral Grab Handle
3. Door Lever
4. Door Control Panel
5. Door Lamp
6. Map Pocket

Fig 20, Door Interior

To open the door from the inside, lift up on the door lever. This will unlatch the door whether or not it is locked.

To unlock the door without unlatching it, pull the lock button upwards.

3.02 Remote Keyless Entry

3.02.01 Key Fob Use

CAUTION:
Failure to observe the following safety instructions can result in an explosion, fire, damage to the key fob, electric shock and other injuries, as well as property damage.

NOTICE:
Do not drop the key fob. Doing so could damage the fob, including damage to the battery compartment allowing the button cell battery to fall out.

Keyless entry is an available option for your vehicle. The key fob can be used to transmit a signal to remotely lock and unlock the doors, start and end the pre-trip light check, and open the door windows. See Fig. 21,Key Fob.

1. Lock Button
2. Unlock Button
3. Lamp Check Button

Fig 21, Key Fob

- To lock both doors, press the lock button.
- To unlock both doors, press the unlock button.
- To open the door windows, press the unlock button for three seconds.
- To start or end the pre-trip light check, press the lamp check button.

3.02.02 Replacement of the Key Fob Battery

DANGER:

Do not ingest the key fob battery. The button cell battery in this key fob is a chemical burn hazard.

Always keep the key fob and button cell batteries away from children.

Always safely dispose of used batteries.

If the button cell battery in this key fob is swallowed, it can cause severe internal burns within two hours and can lead to death. If you think a battery might have been swallowed or otherwise placed inside any part of the body, seek immediate medical attention.

If the battery compartment does not close securely, stop using the key fob.

CAUTION:

Failure to observe the following safety instructions can result in an explosion, fire, damage to the key fob, electric shock and other injuries, as well as property damage:

You will need a flat surface, a CR2032 replacement button battery, and a 5/32 inch (4mm) flat screwdriver or similar tool to replace the key fob battery.

1. Remove the key fob from the key ring.

2. Hold the fob with the opening for the key ring upwards and carefully insert the flat end of the screwdriver on one side of key fob as see Fig. 22,Opening the Key Fob. Twist the end of the screwdriver to pry the two halves apart.

Fig 22, Opening the Key Fob

3. Move the end of the screwdriver to the other side of the top of the fob and pry that side apart.
4. Use your fingers to separate the two pieces of the fob.
5. Lay the side of the fob with the battery flat on the table and insert the end of the screwdriver underneath the top of the battery to gently lift it out. See Fig. 23,Removing the Battery.

   Dispose of the used battery safely according to local regulations.

Fig 23, Removing the Battery

6. Insert the new battery with the + side down and the blank side up as shown in Fig. 24,Inserting the Battery.

   The bottom edge of the battery must be inserted toward the bottom of the key fob, pressing open the metal cradle to create space for it to slip into place.

07/12/2022 f547912

Fig 24, Inserting the Battery

7. Align the hooked tag on the bottom edge of the circuit board side of the fob with the matching recess on the other side of the fob as shown in Fig. 25,Align the Key Fob Hook. Press the two sides of the fob together working from the bottom toward the top.

   The two halves may need some adjustment to snap into place.

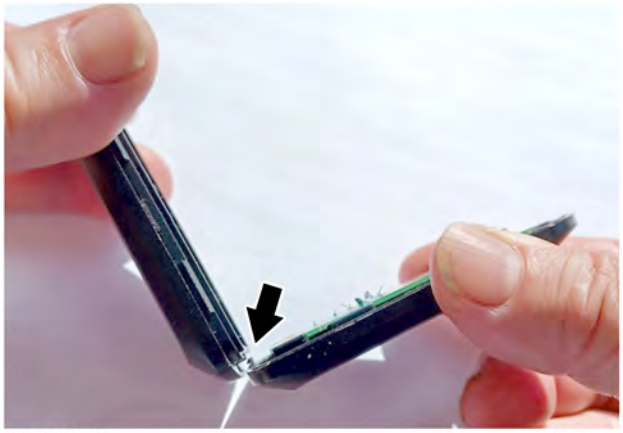

07/12/2022 f547913

Fig 25, Align the Key Fob Hook

IMPORTANT: If the fob will not close completely and securely, open it and try again. If it is not possible to securely close the fob, stop using it. An unsecured button battery is hazardous. Safely dispose of the defective battery and fob according to local regulations and order a new fob at an authorised Western Star dealership.

8. Verify the fob is fully and completely closed as shown in Fig. 26,Securely Closed Key Fob.

Fig 26, Securely Closed Key Fob

9. Attach the key fob to the key ring.

3.02.03 Key Fob Programming

A maximum of four fobs can be programmed to work on one vehicle. Whenever a new fob is needed, all existing fobs must be reprogrammed at the same time. Any existing fobs that were previously programmed will no longer work on the vehicle unless they are all reprogrammed at the same time.

To have the key fobs programmed, take the vehicle to an authorized Western Star dealer or service facility.

3.02.04 Specifications

This system consists of a key fob that uses a radio frequency link for communication between the fob and the vehicle.

3.03 Grab Handles and Access Steps

3.03.01 Entering the Driver Side

CAUTION:

Slipping or falling from the vehicle can result in personal injury or property damage.

Wet or dirty shoes greatly increase the chance of slipping or falling. If your shoes are wet or dirty, be especially careful when entering or exiting the vehicle.

Always maintain three-point contact with the vehicle when entering or exiting the cab. Three-point contact means both feet and one hand, or both hands and one foot.

When steps are mounted on battery box covers, make sure that the cover is latched and secure before using the steps.

Do not step on the fuel tank, battery box, frame, etc. unless adequate slip resistant surfaces and handholds are provided.

Do not jump from the vehicle.

For ease of entry and exit, there is a handle on both the A-pillar and the B-pillar. In addition, the steering wheel and door may be used for secure handholds if needed. There are at least two access steps to provide secure footholds.

1. Open the driver-side door and place anything that you are carrying in the cab.
2. Facing the cab, grasp the B-pillar and A-pillar grab handles with your hands. See Fig. 27,Driver-Side Cab Access.

05/04/2020 f720770a

1. B-Pillar Grab Handle
2. A-Pillar Grab Handle
3. Steering Wheel

Fig 27, Driver-Side Cab Access

3. Step up on the bottom step with your right foot.
4. Step up on the top step with your left foot, grasping the grab handles higher as you move up.
5. Step into the cab with your right foot first, and grasp the steering wheel with your left hand.

3.03.02 Exiting the Driver Side

IMPORTANT: Do not attempt to exit the cab while carrying any items in your hands. Place them in an accessible location on the seat or cab floor and make sure they will not get in your way as you exit, then retrieve them after you have exited the cab.

CAUTION:

Always face in when exiting the cab. Do not attempt to exit with your back to the cab, as you would going down a flight of stairs. It is easier to slip or lose your balance. If you slip when exiting in this way, there is a greater likelihood of personal injury.

1. Grasp the steering wheel with your right hand and the A-pillar grab handle with your left hand, and place your left foot on the top step. See Fig. 28,Driver-Side Cab Access.
2. Face into the cab, and grasp the B-pillar grab handle with your right hand.
3. Step down on the bottom step with your right foot, grasping the grab handles lower as you move down.
4. Step to the ground with your left foot first.

1. B-Pillar Grab Handle
2. A-Pillar Grab Handle
3. Steering Wheel

Fig 28, Driver-Side Cab Access

3.03.03 Entering the Passenger Side

1. Open the passenger-side door and place anything that you are carrying in the cab.
2. Facing the cab, grasp the B-pillar and A-pillar grab handles with your hands. See Fig. 29,Passenger-Side Cab Access.

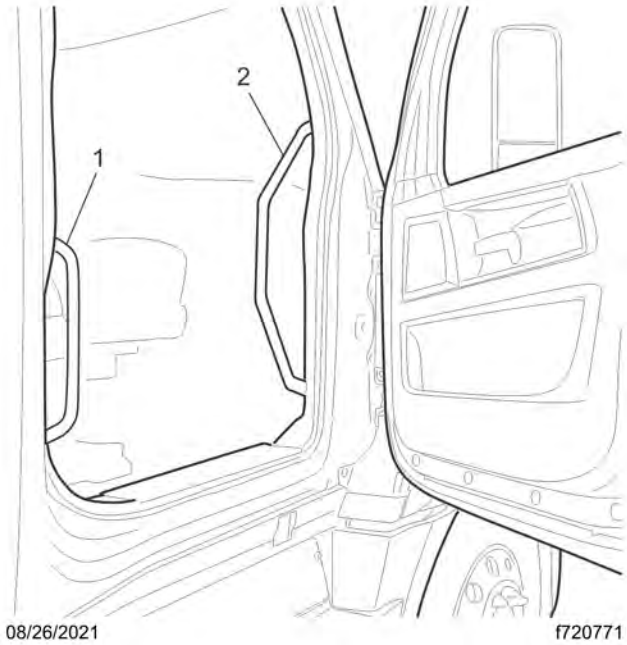

1. B-Pillar Grab Handle
2. A-Pillar Grab Handle

Fig 29, Passenger-Side Cab Access

3. Step up on the bottom step with your left foot.
4. Step up on the top step with your right foot, grasping the grab handles higher as you move up.
5. Step into the cab with your left foot first, while holding on to the grab handle with your right hand.

3.03.04 Exiting the Passenger Side

IMPORTANT: Do not attempt to exit the cab while carrying any items in your hands. Place them in an accessible location on the seat or cab floor and make sure they will not get in your way as you exit, then retrieve them after you have exited the cab.

CAUTION:

Always face in when exiting the cab. Do not attempt to exit with your back to the cab, as you would going down a flight of stairs. It is easier to slip or lose your balance. If you slip when exiting in this way, there is a greater likelihood of personal injury.

1. Grasp the A-pillar grab handle with both hands, and place your right foot on the top step. See Fig. 30,Passenger-Side Cab Access.
2. Face into the cab, and grasp the B-pillar grab handle with your left hand.
3. Step down on the bottom step with your right foot, grasping the grab handles lower as you move down.
4. Step to the ground with your left foot first.

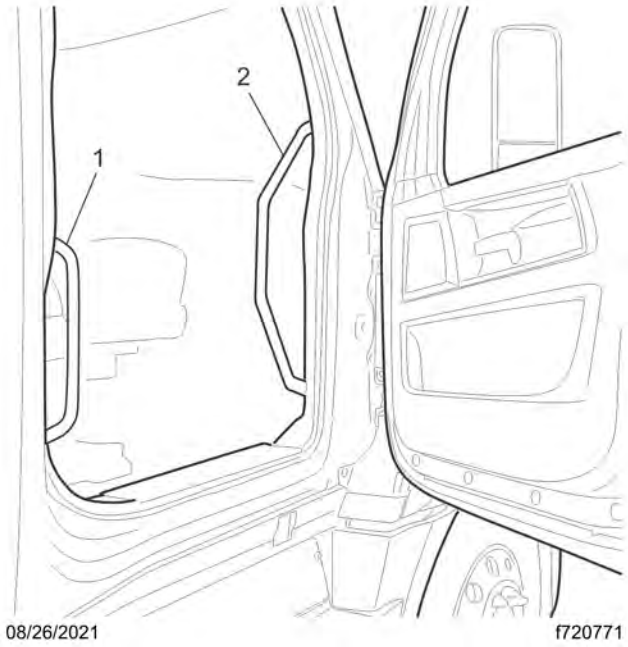

1. B-Pillar Grab Handle
2. A-Pillar Grab Handle

Fig 30, Passenger-Side Cab Access

3.04 Cab-to-Sleeper Access

To open the sleeper access on vehicles with vinyl sleeper curtains, unzip the sleeper curtains. If desired, unsnap the curtains all the way around the sides and top, and remove the curtains.

To open the sleeper access on vehicles with velour sleeper curtains, unfasten the snaps at one side, then push the curtain to the opposite side.

3.05 Sleeper Tip Out Window and Door

The sleeper can come equipped with tip out windows (see Fig.31,Tip Out Window) or sleeper doors (see Fig. 32,Location of Sleeper Doors). Neither are intended for entry or exit.

The tip out window is intended only as a way to bring air into the sleeper area. To open the tip out window from the inside, turn the bottom knob to either the left or right. See Fig.31,Tip Out Window.

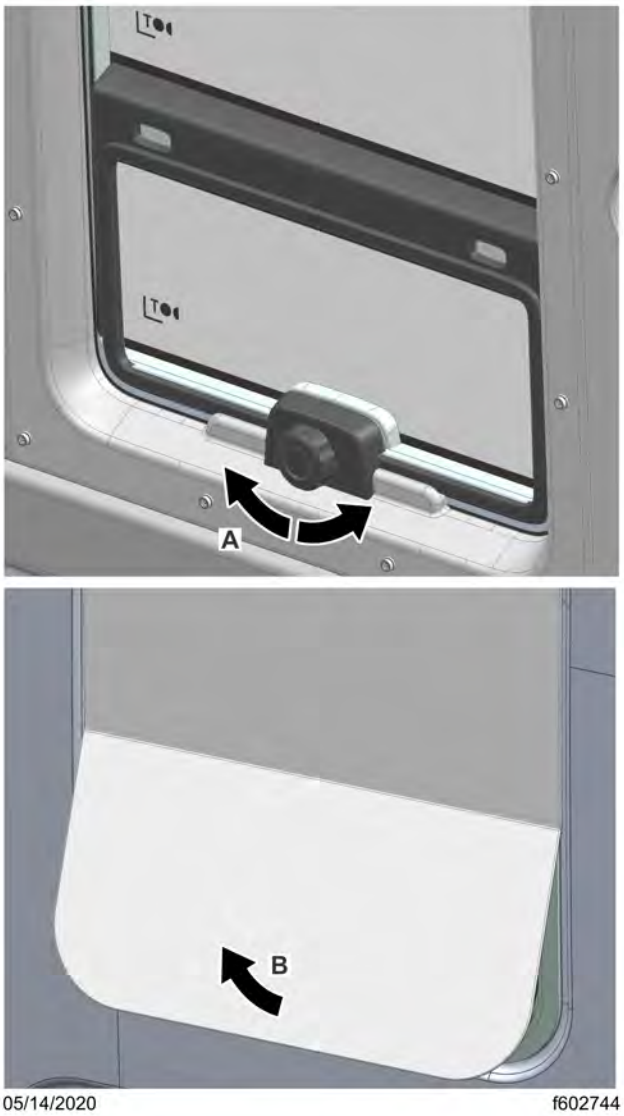

A. Rotate to Unlatch and Open Window

B. Open Tip Out Window

Fig 31, Tip Out Window

The sleeper door is intended only as a convenient means to stow or remove belongings from the sleeper area. To open the sleeper door from the inside, push down on the lever handle located aft of the door inside the sleeper compartment. To open the sleeper door from outside, open the cab door then pull out on the upper ACCESS lever located inside the cab door opening (see Fig.33,Sleeper Door Levers). To close the door, pull on the strap attached to the inside of the door, or push it closed from the outside until it latches.

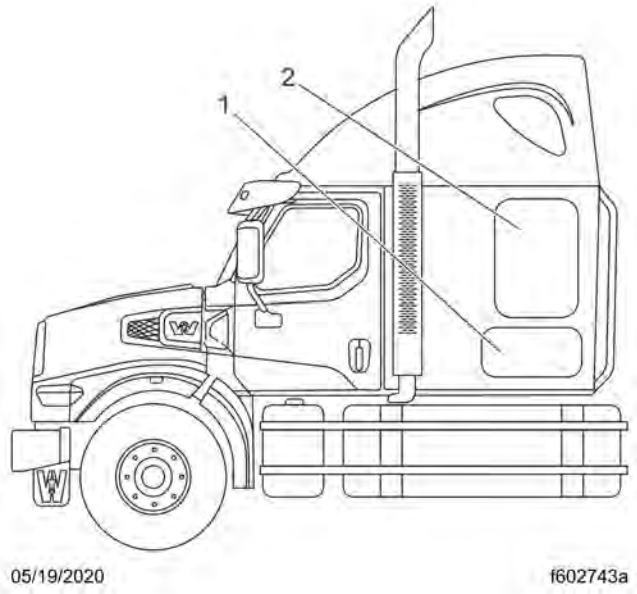

1. Luggage Door
2. Sleeper Door

Fig 32, Location of Sleeper Doors

IMPORTANT: The sleeper doors have two-stage latching. When closing the doors, ensure that they are completely latched to prevent wind, noise, and water intrusion.

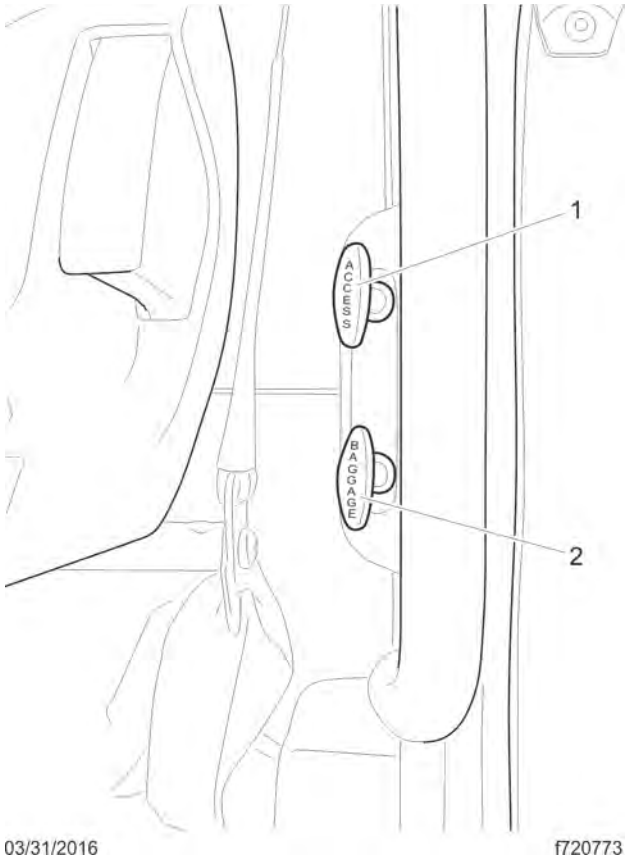

1. Sleeper Door Lever
2. Luggage Door Lever

Fig 33, Sleeper Door Levers

3.06 Luggage Door

To open the luggage door (see Fig.34,Location of Sleeper Doors), pull out on the lower lever located inside the cab door opening (see Fig.35,Sleeper Door Levers). To close the door, push it closed from the outside until it latches.

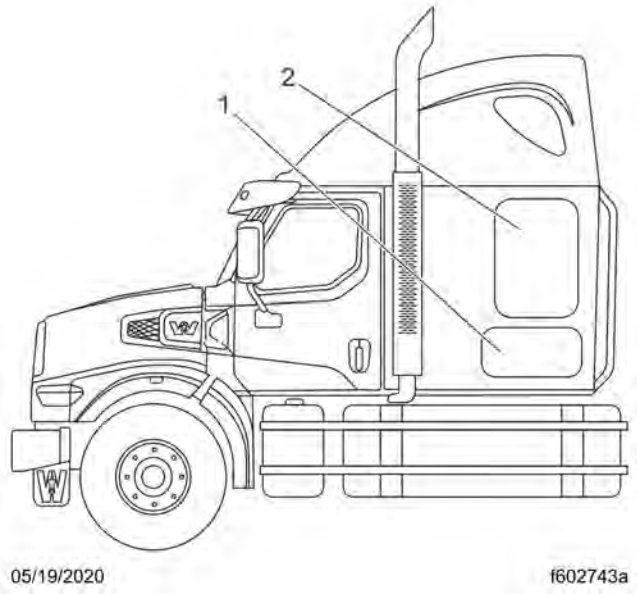

1. Luggage Door
2. Sleeper Door

Fig 34, Location of Sleeper Doors

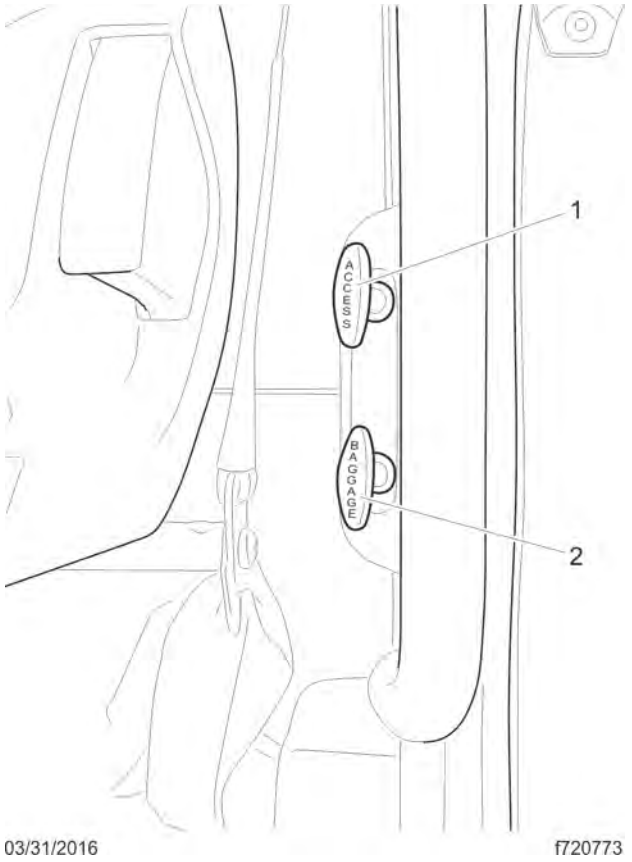

1. Sleeper Door Lever
2. Luggage Door Lever

Fig 35, Sleeper Door Levers

3.07 Back-of-Cab Access

3.07.01 General Information

When trailer air and electrical connections cannot be reached conveniently from the ground, Federal Motor Carrier Safety Regulations require commercial carriers to provide back-of-cab access.

A grab handle is typically located on the back wall of the sleeper or cab. Steps are mounted on the frame rail, and a deck plate is mounted across the top of the frame rails. See Fig. 36,Back-of-Cab Access.

CAUTION:

Follow these rules for back-of-cab access. Failing to follow these rules could lead to a fall, and possible personal injury.

Never step on any exterior part unless it has a slip-resistant surface meant for safe stepping. If the surface is movable, such as a battery box cover with a slip-resistant surface, be certain it is firmly secured.

Be careful not to trip on items such as chains or air lines in the back-of-cab area.

Always follow safety procedures for back-of-cab access, maintaining three-point contact—both hands and one foot, or both feet and one hand—whenever moving around, and always face in toward the deck plate when climbing up or down.

Wet or dirty shoes, steps, or grab rails greatly increase the chance of slipping or falling. If your shoes or the contact areas are wet or dirty, clean and dry them as much as possible before accessing the back of cab area, and be especially careful when climbing or standing on the vehicle.

Never jump onto, or off of, a vehicle; doing so creates a very high likelihood of a fall and personal injury.

IMPORTANT: Climb onto, and down from, back-of-cab access facing in toward the vehicle, as you would on a ladder. Do not climb up or down facing out away from the vehicle.

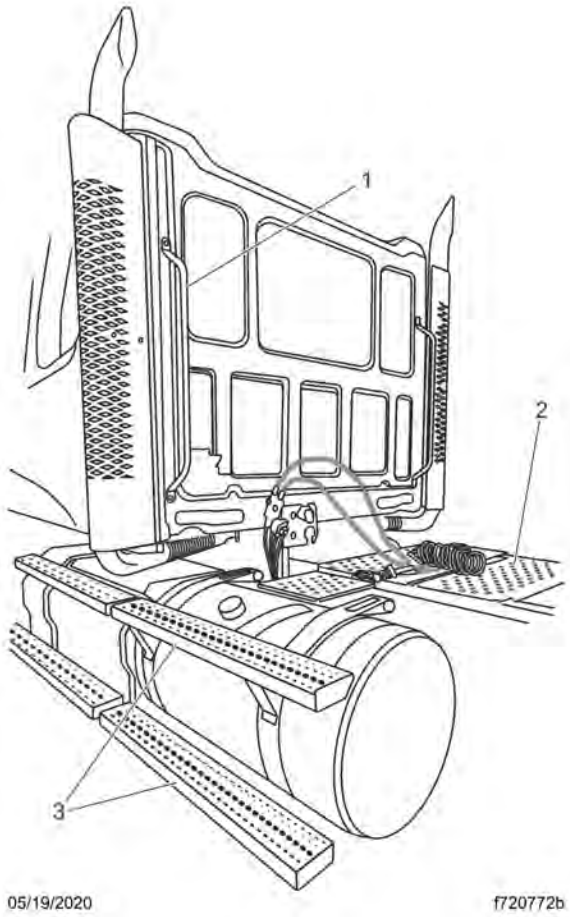

1. Grab Handle
2. Deck Plate
3. Steps

Fig 36, Back-of-Cab Access

3.07.02 Accessing Back-of-Cab Area

WARNING:

External surfaces of the exhaust system remain hot after the engine has been shut down. When accessing the back of the cab or sleeper, do not touch any part of the exhaust system other than the exhaust-mounted grab handle, if equipped, or severe burns could occur.

1. Facing the deckplate, grasp the grab handle with both hands. Reach up as far as is comfortable.
2. Place one foot on the bottom step and pull yourself up.
3. Place your other foot on the top step.
4. Move your lower hand to a higher position on the grab handle.
5. Step onto the deck plate.

3.07.03 Exiting Back-of-Cab Area

1. Facing toward the center of the vehicle, grasp the grab handle with both hands.

2. Step one foot at a time onto the top step.
3. Move your upper hand to a lower position on the grab handle.
4. Move one foot to the bottom step.
5. Step to the ground with your upper foot first.

3.08 Hood Opening and Closing

3.08.01 General Information

The hood can be raised to a full-open position. Tilt-assist struts help to both raise the hood and lower it into the vehicle operating position.

In the vehicle operating position, the hood is secured to the cab-mounted cowl by a hold-down latch on each side.

In the fully open position, the right-hand locking hood strut should lock automatically to keep the hood open. See Fig. 37,Locking Right-Hand Hood Strut.

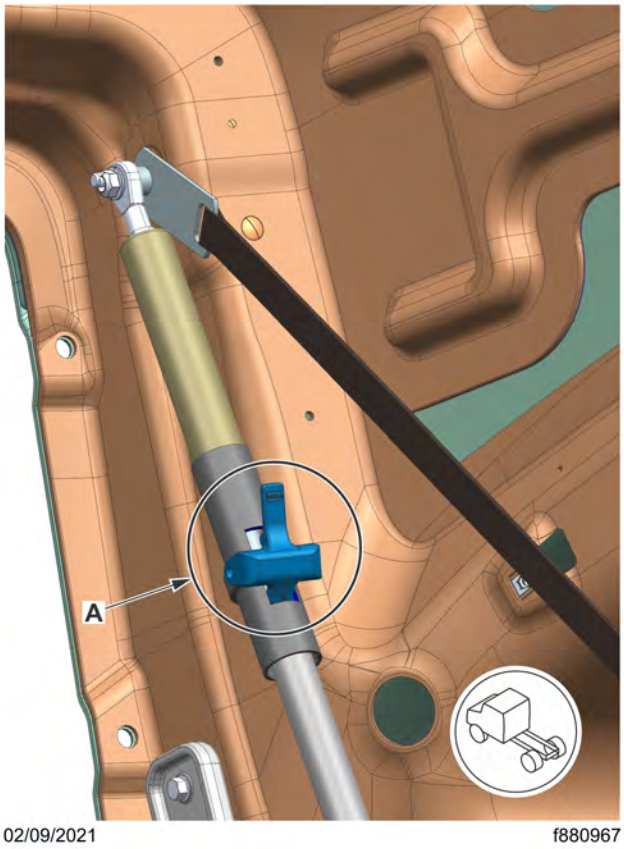

1. Locking Lever

Fig 37, Locking Right-Hand Hood Strut

To unlock the strut and lower the hood, flip down the lever located midway on the strut.

3.08.02 Opening the Hood

1. Release both hood hold-down latches by pulling the handles outward.

2. With both hands on the grab handle at the front of the vehicle (see Fig.38,Western Star Hood.), slowly tilt the hood forward.
3. As the hood starts to open, walk backwards as you pull. The hood will stop in the full-open position.

1. Hood Grab Handle

Fig 38, Western Star Hood

IMPORTANT: Check that the automatic locking hood strut is fully engaged before working on the vehicle.

3.08.03 Closing the Hood

1. Disengage the locking hood-strut by pushing the lever down.
2. Push on the top center of the hood, tilting it toward the closed position.
3. As the hood goes over center, allow it to settle on the rear supports.

IMPORTANT: Make sure that both hood hold-down latches are fully engaged before operating the vehicle.

4. Make sure the hood is flush with the cowl, then secure the hood by engaging both hood hold-down latches.

4.01 Instrumentation Control Unit....45
4.01.01 Instrumentation Control Unit....45
4.01.02 Ignition Sequence....45
4.01.03 ICUC Screen Navigation....46
4.01.04 Time and Date....50
4.02 Driver Display....50
4.02.01 ICUC Alert Messages....50
4.02.02 Time Settings: Display Format....52
4.02.03 Setting An Alarm....53
4.02.04 ICUC Driver Display Screens....53
4.03 Digital Gauges and System Monitors....62
4.03.01 ICUC Gauges....62
4.03.02 Engine Oil Temperature Gauge....63
4.03.03 Turbocharger Boost Pressure Gauge....65
4.03.04 Transmission Oil Temperature Gauge....65
4.03.05 Drive Axle Oil Temperature Gauges....66
4.03.06 Application Air Pressure Gauge....67
4.03.07 DEF and Diesel Particulate Filter Monitoring....68
4.03.08 Tire Pressure Monitoring System....68
4.03.09 Other ICUC Gauges and Measurements....69
4.03.10 Alerts....69
4.03.11 Battery Voltage....69
4.03.12 Diagnostics....70
4.03.13 Engine Maintenance....70
4.03.14 Maintenance System....70
4.03.15 Transmission Prognostics....71
4.03.16 Suspension Air Pressure....71
4.03.17 ICUC Vehicle Operations: Vehicle Settings....71
4.03.18 Cruise Control....74
4.03.19 Transmission....75
4.03.20 Engine Idle Adjust....76

4.03.21 Optimized Idle 76
4.04 Infotainment 77
4.04.01 Safety Information 77
4.04.02 Infotainment Reception 77
4.04.03 General ICUC Infotainment Information 77
4.04.04 ICUC Audio Features 79
4.04.05 ICUC Telephone Features 80
4.05 Analog Instruments 81
4.05.01 Air Intake Restriction Gauge 81
4.05.02 Application Air Pressure Gauge 82
4.05.03 Coolant Temperature Gauge 82
4.05.04 Drive Axle Oil Temperature Gauges 83
4.05.05 Engine Oil Pressure Gauge 84
4.05.06 Engine Oil Temperature Gauge 86
4.05.07 Fuel/Diesel Exhaust Fluid (DEF) Gauge 87
4.05.08 Primary and Secondary Air Pressure Gauges 87
4.05.09 Speedometer 88
4.05.10 Suspension Air Pressure Gauge 89
4.05.11 Tachometer 89
4.05.12 Transmission Fluid Temperature Gauge 90
4.05.13 Turbocharger Boost Pressure Gauge 91
4.05.14 Voltmeter 91
4.06 Warnings, Indicators, and Messages 92
4.06.01 Audible Alerts: ICUC 92
4.06.02 Warnings, Indicators, and Messages 92
4.06.03 Engine Protection System 104

4. Instruments

4.01 Instrumentation Control Unit

4.01.01 Instrumentation Control Unit

The instrumentation control unit (ICU) provides the driver with engine and vehicle information. See Fig. 39,Instrument Cluster Overview - ICUC for a typical ICUC layout.

This section provides general system and operating instructions for ICUC components. Following sections provide more detailed information.

A. Home
B. Drive Time Systems
C. Vehicle Operations
D. Maintenance
E. Infotainment
F. User Settings
1. Speedometer
2. Coolant Temperature Gauge
3. Primary and Secondary Air Pressure Gauge
4. Fuel and DEF Level Gauge
5. Engine Oil Pressure Gauge
6. Tachometer
7. Driver Display

Fig 39, Instrument Cluster Overview - ICUC

ICUC

The instrument cluster unit (common), or ICUC, is comprised of six physical gauges, indicator lamps (telltales), a six inch portrait driver display screen, steering wheel mounted switches, and audible warning systems. Warning and indicator lamps illuminate in red (warning), amber (caution), green (status on), or blue (informational).

The driver display screen provides information on various vehicle systems as well as warnings, cautions, and notifications on systems status.

4.01.02 Ignition Sequence

When the ignition is turned on, the ICU runs a self-check. Observing the ignition sequence is a good way to ensure the ICU is functioning properly.

IMPORTANT: Do not crank the engine until the ICU self-check is complete.

ICUC

NOTE: Air gauges in the ICUC do not complete a sweep of their dials during the ignition sequence.

When the ignition is turned on, the following actions should occur in the ICUC:

- If equipped, the Detroit Assurance splash screen appears.
- The Western Star logo, engine, and transmission information display and remain until startup is complete
- Speedometer and tachometer complete a full sweep of their dials
- Warning and indicator lamps illuminate, then are extinguished (if not active)
- Audible alert sounds for any active faults
- Active alerts are displayed on the ICUC screen.

If the ICUC receives active fault codes, it displays them one after the other until the ignition is turned off. The alerts are displayed until they are acknowledged. If there are no active faults, the ICUC displays the home screen after the self-check completes.

NOTE: If any red or amber warning and indicator lamps do not illuminate during the ICUC self-check or do not go out (if not active) after the self-check completes, take the vehicle to an authorized Western Star service facility as soon as possible.

If active faults are present, take the action outlined in ‘Warnings, Indicators, and Messages’ tables in this chapter, then take the vehicle to an authorized Western Star service facility as soon as possible.

4.01.03 ICUC Screen Navigation

In the ICUC, the driver display screen is broken up into three areas: a navigable menu at the top of the screen, the display area (with a screen indicator if there is more than one page), and a static display at the bottom of the screen. See Fig. 40,ICUC Driver Display.

1. Top Level Menu Categories
2. Static Menu
3. Current Screen Indicator

Fig 40, ICUC Driver Display

The ICUC top level menu categories allows a driver to quickly carry out common actions. Top level menu categories include Home, Drive Time Systems, Vehicle Operations, Maintenance, Infotainment, and User Settings. See Fig. 41,Instrument Cluster Overview - ICUC.

A. Home
B. Drive Time Systems
C. Vehicle Operations
D. Maintenance
E. Infotainment
F. User Settings
1. Speedometer
2. Coolant Temperature Gauge
3. Primary and Secondary Air Pressure Gauge
4. Fuel and DEF Level Gauge
5. Engine Oil Pressure Gauge
6. Tachometer
7. Driver Display

Fig 41, Instrument Cluster Overview - ICUC

The static menu display shows cruise set speed, transmission gear indicators, cruise control settings, and a clock. Soft telltales are also displayed in this area. See Fig. 42,ICUC Static Display.

NOTE: Some optional features have icons in the static display area, for example, Optimized Idle status and Cruise Descent Control Mode.

If present, the screen indicator dashes communicate how many display screens are available in the current menu category. See Fig. 40,ICUC Driver Display.

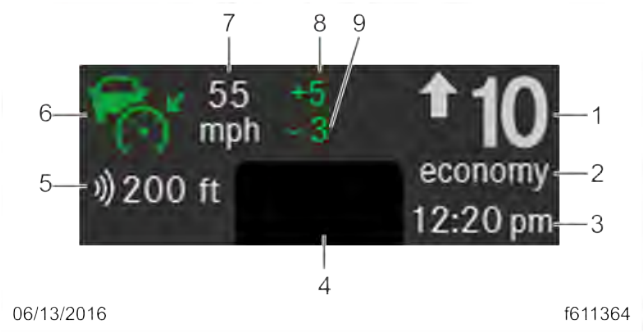

1. Gear Indicator
2. Gear Mode
3. Clock
4. Soft Telltales
5. Adaptive Cruise Control and Tracked Vehicle Distance
6. Cruise Control Symbol (adaptive cruise control shown)
7. Cruise Control Set Speed
8. Cruise Control Overspeed
9. Cruise Control Underspeed

Fig 42, ICUC Static Display

To navigate the ICUC menus, use the Menu Right and Menu Left switches on the steering wheel to move between the top-level menus.

Use the Menu Up and Menu Down buttons to move from screen to screen within the selected category.

See Fig. 43,ICUC Steering-Wheel-Mounted Switches for an overview of steering wheel mounted switches.

For Quick Access Systems menus press the Quick Access System Settings button in the right-hand switch pod. If Quick Access Systems menus are not available, the button will bring up the home screen.

1. Cruise Accelerate/Resume
2. Quick Access System Settings
3. Cruise Decelerate/Set
4. Phone Hang-Up/Reject
5. Marker Interrupt **
6. Phone Pick-Up
7. Headlamp Interrupt **
8. Cruise Cancel
9. Volume Increment Up
10. Menu Right
11. Volume Increment Down
12. Menu Down
13. Back Button
14. Menu Left
15. Menu Accept (OK)
16. Menu Up
17. **Not available in all markets

Fig 43, ICUC Steering-Wheel-Mounted Switches

4.01.04 Time and Date

Time and date are set automatically when the vehicle is equipped with a tachograph. When a vehicle is equipped with a tachograph only the time zone can be changed.

ICUC time and alarm clock settings are found under User Settings. See ‘Driver Display: ICUC’ in this chapter for details.

The correct time and date is required for the following ICU functions to work:

- Alarm Clock
- Maintenance
- Transmission Prognostics

4.02 Driver Display

4.02.01 ICUC Alert Messages

Below is an overview of ICUC driver display screens and functions.

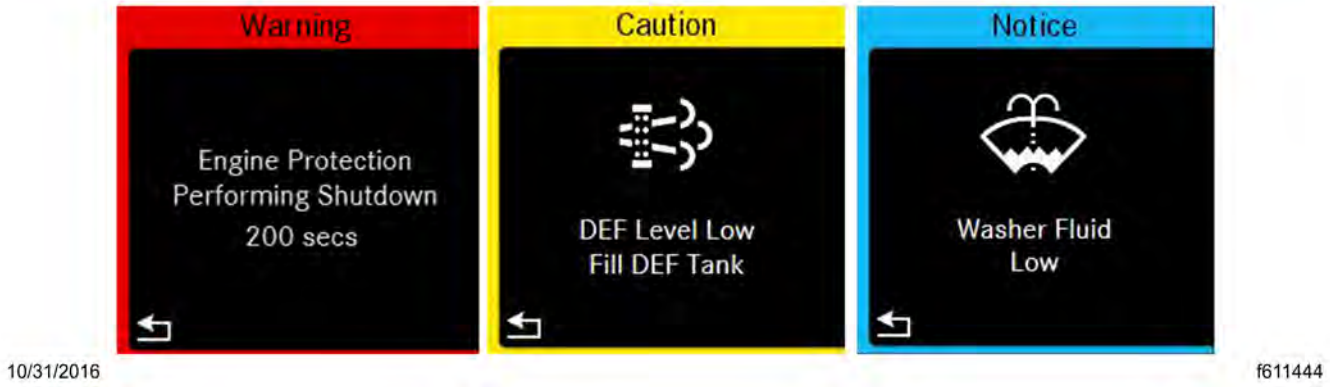

Fig 44, Sample Alert Messages

Alert messages are displayed when certain conditions occur. They include notices, cautions, and warnings that require the driver's attention. Not all alert messages are critical to the operation of the vehicle. More important messages take priority over less important messages. The header text and color indicates the priority of the on-screen message:

- Status/Informational (blue, green, white, or grey)
- Caution (amber)
- Warning (red)

In general, status notices alert the driver to situations or conditions that may improve fuel efficiency or vehicle drivability.

Cautions alert the driver to situations or conditions that may result in damage to vehicle components or derating of engine power.

Warnings alert the driver to situations or conditions that may pose a threat to control of the vehicle. Follow all instructions given in the message.

See Fig. 44, **Sample Alert Messages** for typical alert messages.

ICUC Watch for Ice Popup

When ambient air temperature drops below 34°F (1°C), a Watch For ICE popup message will appear. See Fig. 45,ICUC Watch for Ice Popup. Acknowledge and dismiss this message by pressing the back button in the left hand steering wheel switch pod.

Fig 45, ICUC Watch for Ice Popup

An ambient air temperature below 34°F (1°C) will also cause a snowflake icon to appear next to the display temperature. The snowflake icon will display until the ambient air temperature rises to 37°F (3°C).

If the temperature drops below 34°F (1°C) after rising above 37°F (3°C), the Watch For ICE popup and snowflake will reappear.

4.02.02 Time Settings: Display Format

NOTE: Local Time Offsets can also be viewed under this menu.

In the ICUC, time can be displayed in 12 or 24 hour format. Time format is set under Time Settings under User Settings.

1. Select the gear icon to open the User Settings menu. The last settings menu accessed will open.
2. If not on the Settings Options List Screen, use the Up arrow in the left-hand steering wheel switch pod to move to this screen.
3. Press OK to access the settings menus.
4. Use the Down arrow in the left-hand steering wheel switch pod to get to Time.
5. Press OK to access Time.
6. Use the Right arrow to navigate from 12h to 24h or 24h to 12h.
7. Press OK on the left-hand steering wheel switch pod to choose an option.

4.02.03 Setting An Alarm

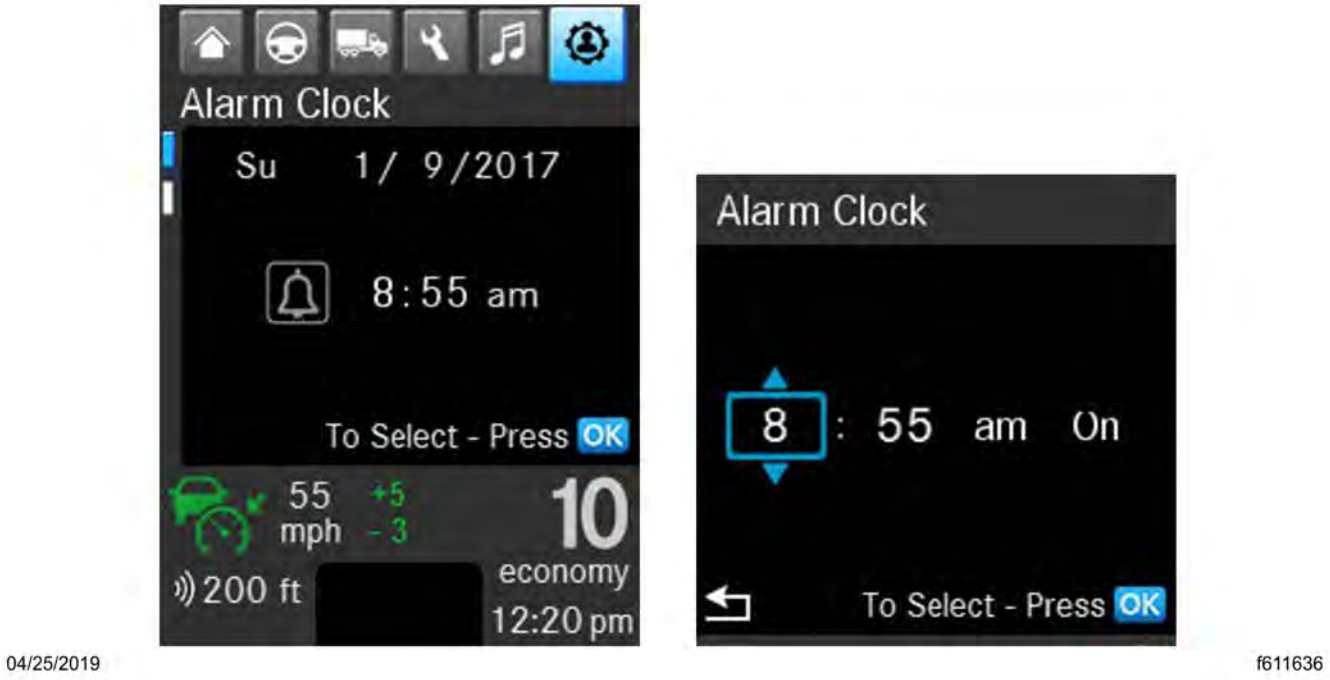

Fig 46, ICUC Alarm Clock Screens

In the ICUC, one alarm can be set under Alarms under the User Settings. See Fig. 46,ICUC Alarm Clock Screens.

The alarm triggers a repeated chirping sound as well as a alarm pop-up. Both can be dismissed by pressing the back button on the left hand steering wheel switch pod.

1. Select the gear icon to open the User Settings menu. The last settings menu accessed will open.
2. If not on the Alarms screen, use the Down arrow in the left-hand steering wheel switch pod to move to this screen.
3. Press OK to access the alarm clock options.
4. Use the Up and Down arrow to choose hour, minute, and am/pm and alarm status.
5. Press OK to set the alarm.

4.02.04 ICUC Driver Display Screens

The six ICUC top-level menu categories are:

- Basic Information
- Drive Time Systems
- Vehicle Operations
- Maintenance
- Infotainment
- User Settings

Quick Access Systems are also available via the right-hand steering wheel Quick Access System Settings button, as shown in Fig. 47,ICUC Top-Level Menu Categories and Navigation.

NOTE: Screens will vary depending on vehicle options. Some screens are accessible only when the vehicle is parked and the parking brake is on.

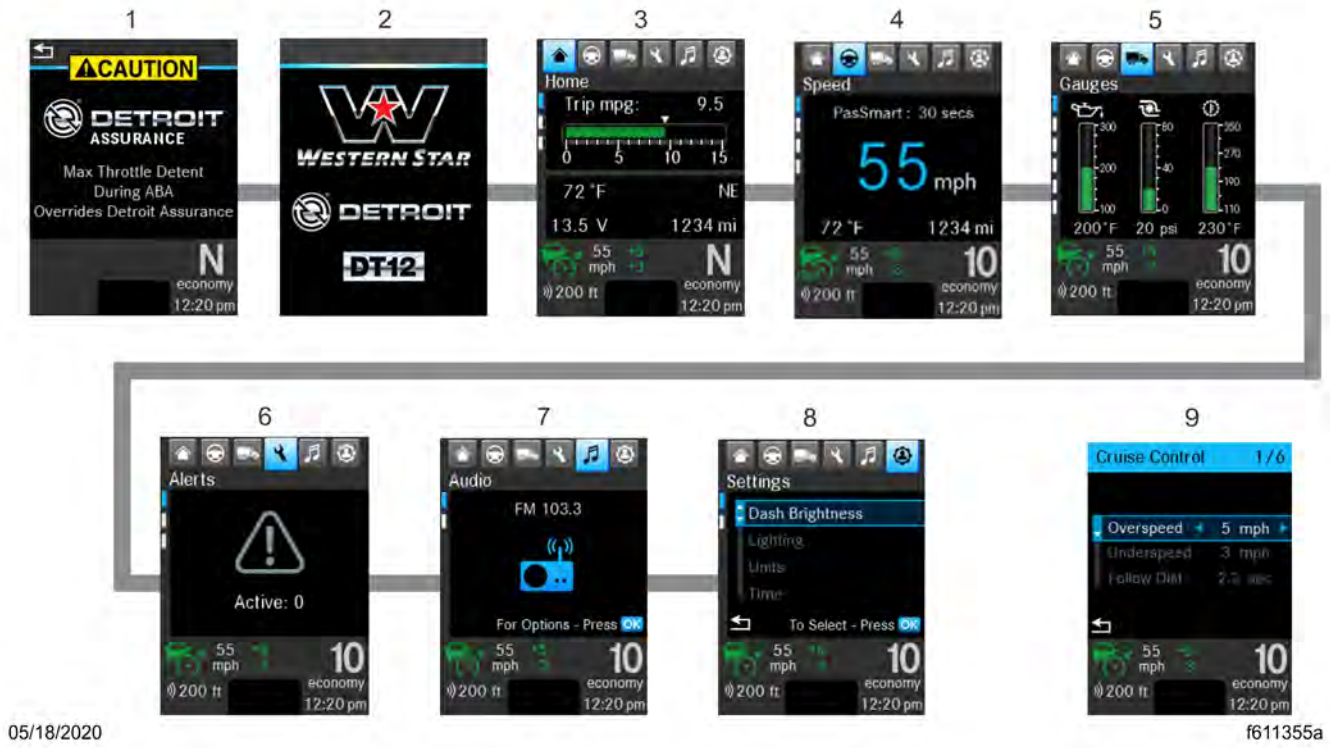

NOTE: Navigate the top-level menu by using the Menu right and Menu left buttons on the steering wheel. Navigate to Quick Access Systems using the Quick Access Systems switch. When navigating the categories, the last-used menu screen in each category is displayed, which is not necessarily the screen shown in this illustration.

1. Detroit Assurance Startup*
2. Vehicle Startup
3. Basic Information
4. Drive Time Systems
5. Vehicle Operations
6. Maintenance
7. Infotainment
8. Quick Access Systems (if available)
9. Quick Access Systems (if available)
10. **If Equipped.

Fig 47, ICUC Top-Level Menu Categories and Navigation

Fig 48, Basic Information: Trip Report

Fig 49, Basic Information: Trip Leg Report

There are currently three top-level menu options under Basic Information:

- Home
- Trip
- Leg

The Home screen displays a fuel consumption bar graph, the current outside temperature, the vehicle charging system voltage, compass direction of travel, and odometer. See Fig. 47,ICUC Top-Level Menu Categories and Navigation.

The Trip report screen displays calculations based on the engine run time such as trip mpg. See Fig. 48,Basic Information: Trip Report.

The trip Leg report screen which displays calculations based on engine run time such as length of trip leg, average speed, and hours. See Fig. 49,Basic Information: Trip Leg Report.

Drive Time Systems Screens

Fig 50, Drive Time Systems: Driver Assistance

There are currently four menu options under Drive Time Systems:

- Speed
- Driving Assistance
- Eco Driver Feedback (discontinued in January 2020)
- Video

The Speed screen shows the current vehicle speed as well as temperature, odometer and PasSmart information. See Fig. 47,ICUC Top-Level Menu Categories and Navigation.

The Driving Assistance screens, depending on systems installed, show Lane Departure Warnings (LDW), Adaptive Cruise Control (ACC) information, Traffic Sign Display, and/or Side Guard Assist (SGA) information. See Fig. 50,Drive Time Systems: Driver Assistance.

The Eco Driver Feedback screens display bar graphs measuring driving behaviors that improve fuel efficiency and reduce vehicle wear. For fuller explanation, see the 'Digital Gauges and System Monitors: ICUC' section.

Depending on systems installed, video is recorded when active safety systems are engaged or unsafe driving conditions are detected.

Vehicle Operations Screens

There are currently five top-level menu options under Vehicle Operations:

- Gauges
- Diesel Particulate Filter
- Tire Pressure Monitoring
- Locks
- Vehicle Settings

For information on gauge screens and Tire Pressure Monitoring (TPM) see 'Digital Gauges and System Monitors: ICUC' in this chapter. Information on diesel particulate filter monitoring is covered in 13.01 Greenhouse Gas Emissions and Fuel Consumption Standards Emissions and Fuel Efficiency. Information on Transmission Prognostics is covered in 16.02.02 Mode Switch Automated and Automatic Transmissions. For information on Locks see Drive Axles.

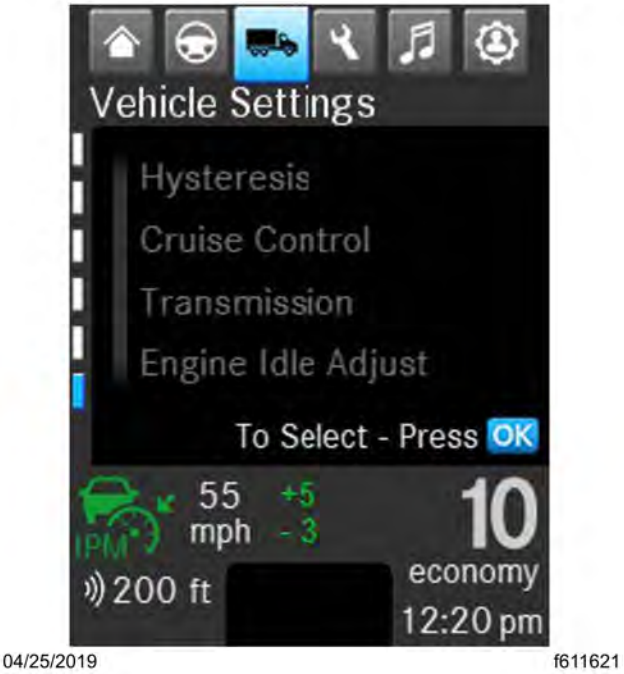

Fig 51, Vehicle Operations: Vehicle Settings

The Vehicle Settings screen provides access to settings for vehicle systems such as cruise control, transmission, and engine idle adjust. See Fig. 51,Vehicle Operations: Vehicle Settings

ICUC Maintenance Screens

There are currently five top-level menu options under Maintenance:

- Alerts
- Diagnostics

- Engine Maintenance
- Eaton Prognostics or Allison Prognostics [depending on vehicle's transmission]
- Maintenance System

Alerts screens show all active notices, cautions, and warnings. See Fig. 52,Maintenance: Alerts.

Fault codes are color-coded to indicate the severity of the fault. Red indicates a condition that may pose a threat to control of the vehicle. Amber indicates a condition that may result in damage to vehicle components or derating of engine power. Blue, grey, and green are used to indicate component status.

Fig 52, Maintenance: Alerts

The Diagnostics screens show active diagnostic trouble codes. See Fig. 53,Maintenance: Diagnostics.

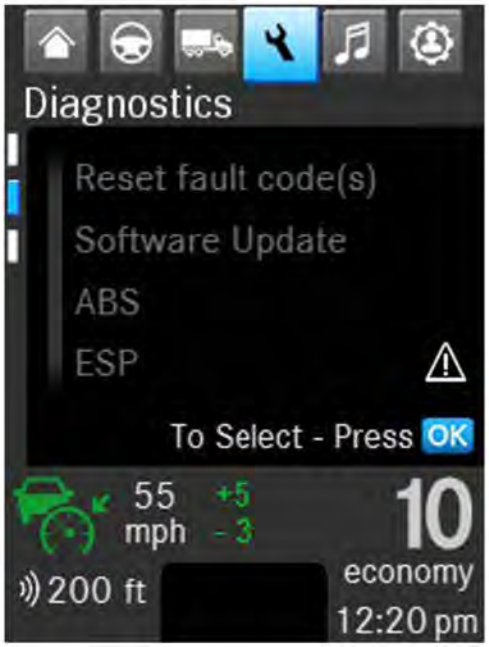

04/25/2019 f611623

Fig 53, Maintenance: Diagnostics

The Engine Maintenance screen shows engine hours. See Fig. 54,Maintenance: Engine Maintenance.

The Maintenance System screens give information about when maintenance is required. See ‘Other ICUC Gauges and Measurements’ in this chapter for more details.

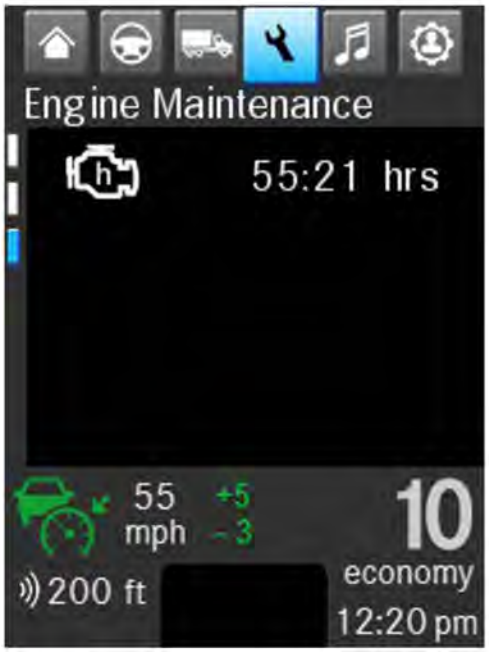

04/25/2019 f611624

Fig 54, Maintenance: Engine Maintenance

Transmission prognostics screens are available for Allison and Eaton transmissions. Allison's screen displays information on the status of the oil filter, oil level, and oil life; the Eaton Ultrashift clutch transmission prognostics screen tracks the grease interval. If transmission health falls below acceptable limits, a message will pop-up on the driver display.
See 16.02.02 Mode Switch Automated and Automatic Transmissions for more information.

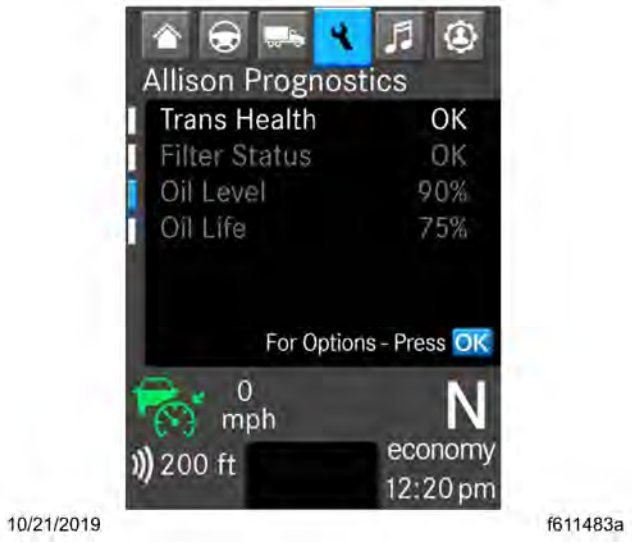

Fig 55, Maintenance: Example of Transmission Prognostics: Allison

ICUC User Settings Screens

NOTE: Some menu options will change depending on vehicle features.

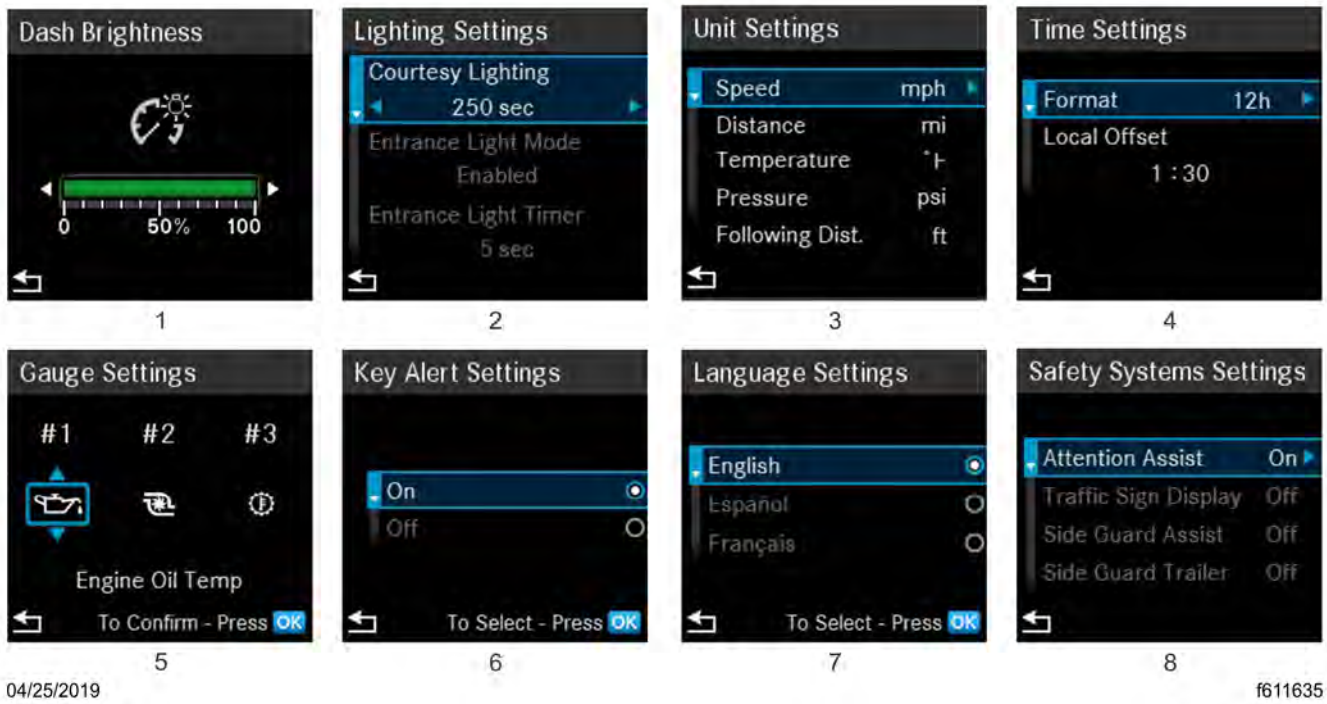

1. Dash Brightness
2. Courtesy and Entrance Light Timing
3. Unit Settings
4. Time
5. Gauge Positioning
6. Key Alert
7. Language
8. Safety Systems

Fig 56, Example ICUC User Settings Screens

The ICUC Setting Options List screens, as shown in Fig. 56,Example ICUC User Settings Screens, allow the driver to choose the following Settings:

- Dash Brightness
- Lighting Timing
- Units
- Time
- Gauge Positioning
- Key Alert
- Language
- Safety Systems

The ICUC has a photoelectric eye that automatically adjusts the dash back-lighting. The menu option Dash Brightness allows the driver to adjust the overall brightness off-set; an optional dash switch may also be available to accomplish this.

Lighting Settings control if the courtesy and entrance lights come on and how long they stay on.

Unit Settings control the measurement values for speed, distance traveled, temperature, pressure, and following distance.

Time Settings control the time display format (12h/24h) and local time zone offsets.

Gauge Settings allow the driver to change the order in which gauges are displayed.

Key Alert Settings control if the key alerts is on or off.

Language Settings allow the driver to set the ICU language to be in either English (American), Spanish (Mexican), or French (Canadian).

Safety System Settings allow the driver to turn safety features such as Traffic Sign Display, Side Guard Assist, and Side Guard Trailer on or off; features listed under this menu depend on vehicle specifications.

ICUC Quick Access Systems Screens

Quick Access Screens are activated by a button on the right hand steering wheel pod. There are up to six top-level menu options:

- Hysteresis
- Cruise Control
- Transmission
- Engine Idle Adjust
- Power Take Off
- Optimized Idle

Hysteresis allows the driver to set the overspeed and underspeed in mph (km/h).

Power Take Off allows the driver to customize the amount of power being transferred to auxiliary devices. See 12.01.01 Idle Shutdown Timer Optional Engine Systems for information about this feature.

For information about Cruise Control, Transmission, and Engine Idle Adjust, see ‘Other ICUC Gauges and Measurements’ in this chapter.

4.03 Digital Gauges and System Monitors

4.03.01 ICUC Gauges

In the ICUC there are six digital gauges and system screens for the Diesel Particulate Filter (DPF), Eco Driver Feedback (EDF) if equipped, and the Tire Pressure Monitoring System (TPMS).

The six digital gauges under the Vehicle Operations menu are:

- Engine Oil Temperature
- Turbo Boost Pressure
- Transmission Oil Temperature
- Front Axle Oil Temperature
- Rear Axle Oil Temperature
- Application Air Pressure

In the ICUC, if a value measured by a digital gauge exceeds the normal range, an amber caution or red danger popup message will appear. However the bar graph color will remain green and the bar graph icons will remain white.

NOTE: The order of ICUC digital gauges and therefore the screen on which they display can be changed under Gauge Settings under Settings.

1. Engine Oil Temperature
2. Turbo Boost Pressure
3. Transmission Oil Temperature

Fig 57, Digital Oil and Pressure Gauges - ICUC

4.03.02 Engine Oil Temperature Gauge

NOTICE:

A sudden increase in oil temperature that is not caused by a load increase may indicate mechanical failure. Bring the vehicle to a safe stop and investigate the cause to prevent further damage. Do not operate the engine until the cause has been determined and corrected.

During normal operation, the optional engine oil temperature gauge, as shown in Fig. 59,Digital Oil and Pressure Gauges - ICUC, should read in the following temperature range:

200 to 260°F (93 to 126°C) for Detroit and Cummins engines

Under heavy loads, such as when climbing steep grades, temperatures that exceed the normal oil temperature range for a short period are not unusual. If the temperature returns to normal when the load decreases, there is no problem.

1. 1.Front Axle Oil Temperature
2. 2.Rear Axle Oil Temperature
3. 3.Application Air Pressure

Fig 58, Digital Oil and Pressure Gauges - ICUC

1. Engine Oil Temperature
2. Turbo Boost Pressure
3. Transmission Oil Temperature

Fig 59, Digital Oil and Pressure Gauges - ICUC

4.03.03 Turbocharger Boost Pressure Gauge

The turbocharger boost pressure gauge, as shown in Fig. 60,Digital Oil and Pressure Gauges - ICUC, indicates the pressure in the intake manifold, in excess of atmospheric pressure, being created by the turbocharger.

1. 1.Front Axle Oil Temperature
2. 2.Rear Axle Oil Temperature
3. 3.Application Air Pressure

Fig 60, Digital Oil and Pressure Gauges - ICUC

4.03.04 Transmission Oil Temperature Gauge

NOTICE:

A sudden increase in transmission fluid temperature that is not caused by a load increase may indicate mechanical failure. Bring the vehicle to a safe stop and investigate the cause to prevent further damage. Do not operate the vehicle until the cause has been determined and corrected.

The transmission oil temperature gauge, as shown in Fig. 61,Digital Oil and Pressure Gauges - ICUC, measures the transmission lubricant operating temperature. Temperatures vary by application, but the transmission fluid temperature gauge reading should not exceed 250°F (121°C).

1. 1.Front Axle Oil Temperature
2. 2.Rear Axle Oil Temperature
3. 3.Application Air Pressure

Fig 61, Digital Oil and Pressure Gauges - ICUC

4.03.05 Drive Axle Oil Temperature Gauges

NOTICE:

A sudden increase in oil temperature that is not caused by a load increase may indicate mechanical failure. Bring the vehicle to a safe stop and investigate the cause to prevent further damage. Do not operate the vehicle until the cause has been determined and corrected.

During normal operation, drive axle oil temperature gauges, as shown in Fig. 62,Digital Oil and Pressure Gauges - ICUC, should read as follows:

- 160 to 220°F (71 to 104°C) for Detroit Classic Model 2, 4, and 6 axles.
- 160 to 329°F (71 to 165°C) for Detroit New Final Drive (NFD) axles.
- 160 to 275°F (71 to 135°C) for Meritor™ drive axles.
- 180 to 200°F (82 to 93°C) for Dana Spicer® drive axles.

Under heavy loads, such as when climbing steep grades, temperatures that exceed the normal oil temperature range for a short period are not unusual. If the temperature returns to normal when the load decreases, there is no problem.

1. 1.Front Axle Oil Temperature
2. 2.Rear Axle Oil Temperature
3. 3.Application Air Pressure

Fig 62, Digital Oil and Pressure Gauges - ICUC

4.03.06 Application Air Pressure Gauge

The application air pressure gauge, as shown in Fig. 63,Digital Oil and Pressure Gauges - ICUC, registers the air pressure being used to apply the brakes. The gauge will not register air pressure until the foot brake pedal is depressed or the trailer hand brake is applied.

1. Engine Oil Temperature
2. Turbo Boost Pressure
3. Transmission Oil Temperature

Fig 63, Digital Oil and Pressure Gauges - ICUC

4.03.07 DEF and Diesel Particulate Filter Monitoring

See 13.01 Greenhouse Gas Emissions and Fuel Consumption Standards Emissions and Fuel Efficiency for details of Diesel Particulate Filter and DEF level monitoring.

4.03.08 Tire Pressure Monitoring System

The Tire Pressure Monitoring System (TPMS) screens display tire pressure, temperature, and sensor battery status. See Fig. 64,Vehicle Operations: Tire Pressure Monitoring System (TPMS). Maintaining correct tire pressure increases fuel economy. Sustained high tire temperature can cause a tire to deteriorate, leading to tread separation and blowouts.

Fig 64, Vehicle Operations: Tire Pressure Monitoring System (TPMS)

Tire pressure can be displayed in psi or bar units. Temperature can be displayed in °F or °C. Units of measure are set under Settings. Sensor battery status is displayed as a bar chart inside the outline of a battery.

The TPMS will change the color of the tire if the tire pressure or temperature is either too high or too low. See Fig. 64,Vehicle Operations: Tire Pressure Monitoring System (TPMS). It will also change the color of the sensor battery icon if the power levels are too low. Amber indicates a condition that may result in damage. Red indicates a condition that may pose a threat to the vehicle.

Tire pressure monitoring settings such as threshold temperatures can be set on the TPMS screen.

4.03.09 Other ICUC Gauges and Measurements

In addition to the two screens of gauges displayed under the Vehicle Operations menu described above, the ICUC driver display communicates a number of values related to vehicle operations. They are listed in alphabetical order below.

4.03.10 Alerts

The Alerts screen stores the current active alerts.

Alerts are color-coded to indicate severity. Red indicates a condition that may pose a threat to control of the vehicle. Amber indicates a condition that may result in damage to vehicle components or derating of engine power. Grey or white is used for notices.

4.03.11 Battery Voltage

The Home screen in the ICU displays the vehicle charging system voltage in the bottom left. By monitoring this number, the driver can stay aware of potential battery charging problems and have them fixed before the batteries discharge enough to create starting difficulties.

The Home screen will normally show approximately 13.7 to 14.1 volts when the engine is running. When the engine is off, the voltage of a fully charged battery is 12.7 to 12.8 volts. Battery voltage under 12.0 volts is considered a low battery, and a completely discharged battery will produce only about 11.0 volts.

If the Home screen shows an undercharged or overcharged condition for an extended period, have the charging system and batteries checked at an authorized Western Star service facility.

4.03.12 Diagnostics

The Diagnostics screen communicates fault codes and other diagnostic information about the vehicle.

Fault codes are color-coded to indicate the severity of the fault. Red indicates a condition that may pose a threat to control of the vehicle. Amber indicates a condition that may result in damage to vehicle components or derating of engine power. Grey or white indicates a condition that may affect fuel efficiency or vehicle handling.

4.03.13 Engine Maintenance

This screen shows the number of hours the engine has been operating.

4.03.14 Maintenance System

NOTE: The wrench icon indicates service is needed, not that something needs to be fixed.

Standard messaging is based on the number of miles (km) driven or time passed since the last service.

Predictive maintenance information is calculated based on these factors as well as engine and transmission load and oil temperature for vehicles with a Detroit engine, transmission, and axles.

Currently, predictive maintenance information is given for engine oil, transmission oil, and axle oil changes. By taking driving conditions into account, predictive maintenance can provide more accurate intervals for fluid changes.

When the service interval ends, a message that maintenance is due will appear.

The Maintenance System pop-up notice will appear with every key cycle until the system is reset.

When the service interval is overdue, the color of the wrench icon on the maintenance screen will change from white to amber and the message will change to Maintenance Due Now. See Fig. 65, Maintenance System Status - ICUC. This cautionary pop-up will continue to appear with every key cycle.

Fig 65, Maintenance System Status - ICUC

Each service interval must be reset in the maintenance system when service is performed to provide for accurate future service intervals and to turn off pop-up messaging.

The reset button for maintenance system screens will not appear until the vehicle has been driven 6.2 miles and the engine has run for fifteen minutes.

Maintenance system information and service recommendations can also be viewed in the **Detroit Connect**portal. Information on the portal is updated every seven days.

4.03.15 Transmission Prognostics

Transmission prognostics screens are available for Allison and Eaton transmissions. Allison's screen displays information on the status of the oil filter, oil level, and oil life; the Eaton Ultrashift clutch transmission prognostics screen tracks the grease interval. If transmission health falls below acceptable limits, a message will pop-up on the driver display.
See 16.02.02 Mode Switch Automated and Automatic Transmissions for more information.

NOTE: For a valid oil level measurement, the vehicle must be stopped on a level surface with the transmission in neutral (N).

4.03.16 Suspension Air Pressure

The ICUC may display yellow caution suspension alerts.

These include Suspension Lowered and Suspension Raised alerts, as shown in Fig. 66,Suspension Lowered Alert - ICUC and Fig. 67,Suspension Raised Alert - ICUC, indicating that the current rear suspension height is either below or above the normal ride height.

Fig 66, Suspension Lowered Alert - ICUC

Fig 67, Suspension Raised Alert - ICUC

4.03.17 ICUC Vehicle Operations: Vehicle Settings

The ICUC Vehicle Operations menu has a submenu called Vehicle Settings. Settings and controls for features installed on the vehicle can be found here. These features may include:

Cruise Control. See Fig. 68,Quick Access Screen: Cruise Control.

Transmission. See Fig. 69,Quick Access Screen: Transmission.

Attention Assist

Engine Idle Adjust. See Fig. 70,Quick Access Screen: Engine Idle Adjust.

Optimized Idle

See . Many of these may also be accessible under the Quick Access Systems menu.

NOTE: If equipped, features like Active Brake Assist, Traffic Sign Display, and Side Guard Assist can be turned off or on under the Safety Systems Settings Menu.

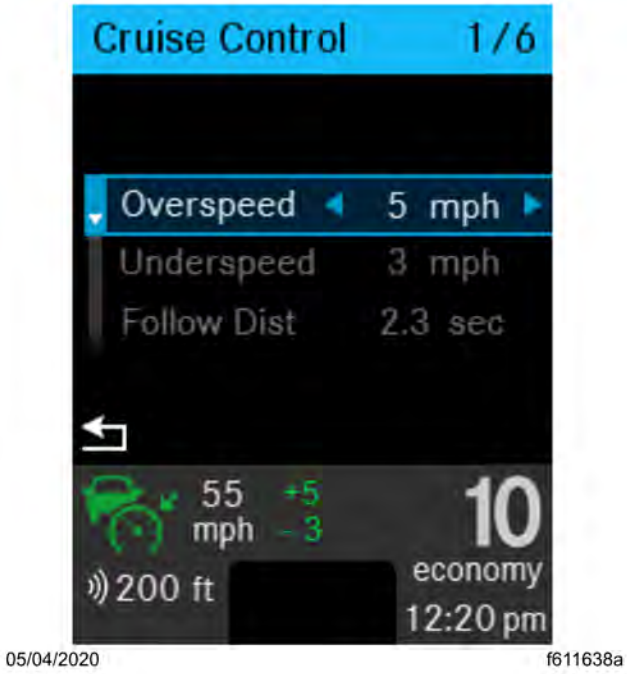

Fig 68, Quick Access Screen: Cruise Control

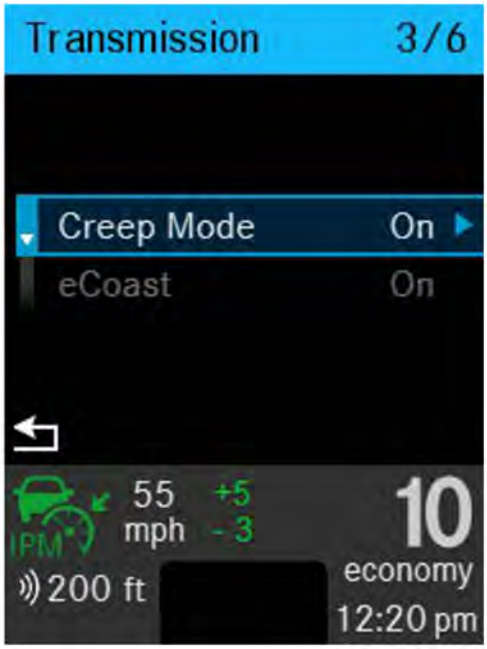

04/29/2019 f611639

Fig 69, Quick Access Screen: Transmission

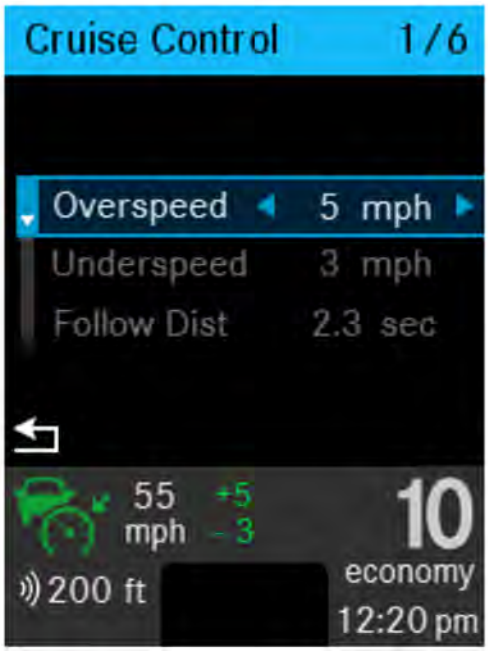

05/04/2020 f611638a

Fig 70, Quick Access Screen: Engine Idle Adjust

4.03.18 Cruise Control

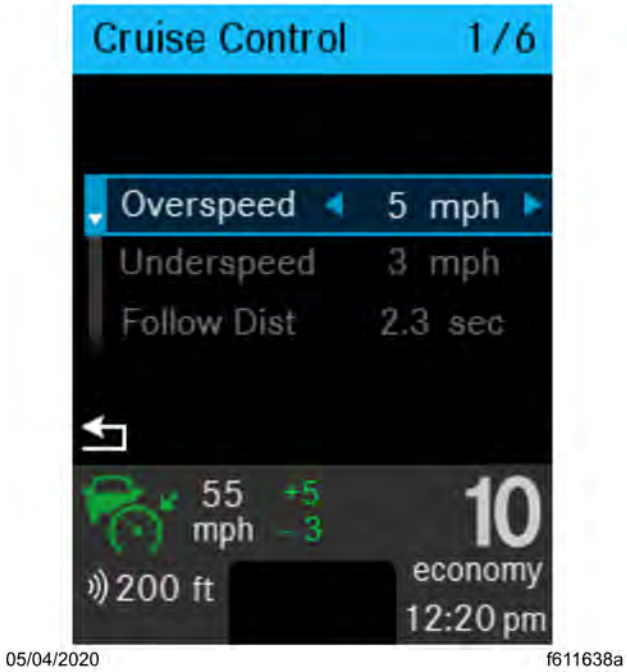

Fig 71, Quick Access Screen: Cruise Control

NOTE: Overspeed and underspeed settings may also be set under the card titled Hysteresis.

Cruise Control allows the driver to set overspeed and underspeed options and following distance. See Fig. 71,Quick Access Screen: Cruise Control.

For full instructions on Cruise Control, see 6.02.02 Multipurpose Camera 2 (MPC2) Driver Assistance Features.

4.03.19 Transmission

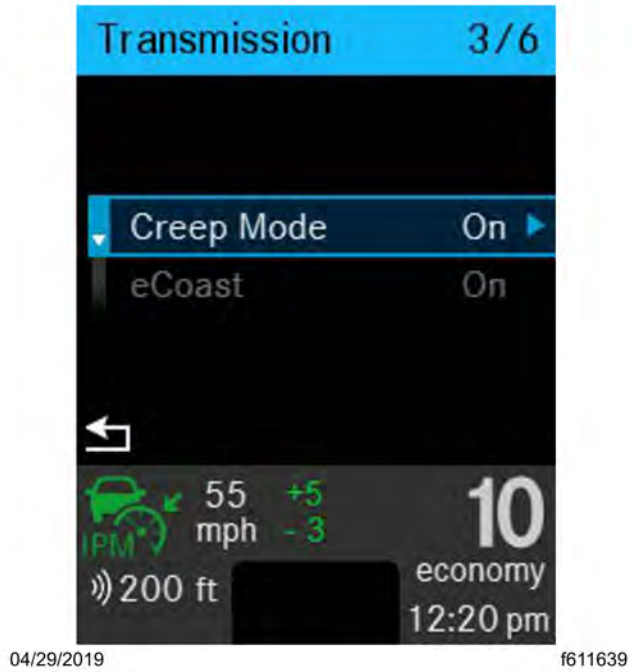

Fig 72, Quick Access Screen: Transmission

Transmission screens allow the driver to turn features such as creep mode or eCoast on or off. See Fig. 72,Quick Access Screen: Transmission.

For a full coverage of Creep and eCoast mode see 16.02.02 Mode Switch Automated and Automatic Transmissions.

4.03.20 Engine Idle Adjust

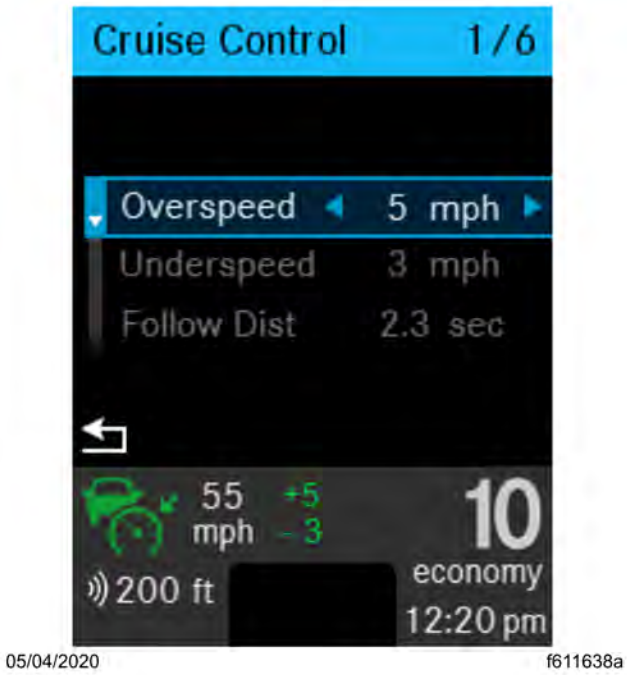

Fig 73, Quick Access Screen: Engine Idle Adjust

Engine Idle Adjust is not available when the vehicle is in motion.

This feature allows the increase or decrease of the base engine idle speed. See Fig. 73,Quick Access Screen: Engine Idle Adjust. Increasing the base engine idle might be necessary to generate enough power to operate accessories.

The following conditions must be met to the engine idle speed to be adjusted:

- Engine is running
- Vehicle is at a standstill
- Transmission is in neutral

4.03.21 Optimized Idle

Optimized Idle reduces idle time by automatically stopping and restarting the engine. Besides saving fuel, it helps keep the batteries charged while maintaining engine and cab temperature.

For a full description of Optimized Idle, see 12.01.01 Idle Shutdown Timer Optional Engine Systems.

4.04 Infotainment

4.04.01 Safety Information

WARNING:
There is a risk of distraction from operating integrated communication equipment while the vehicle is in motion.

A driver can be distracted from the traffic situation if operating communication equipment integrated in the vehicle when driving, possibly causing loss of control of the vehicle.

Only operate this equipment when the road and traffic situation permits, otherwise stop and operate the equipment with the vehicle stationary.

The driver must observe the legal requirements of the country the vehicle is driving through when operating the system.

Wearing polarized sunglasses may impair or limit your ability to read the display.

4.04.02 Infotainment Reception

Features of the infotainment system depend on cellular and satellite reception. In certain situations, such as driving through tunnels, mountains, or parked in multistory parking lots, reception may be impaired due to interference or there may be no reception.

4.04.03 General ICUC Infotainment Information

The ICUC infotainment system options consist of:

- AM/FM Radio
- Satellite Radio: SiriusXM®
- Weather Radio
- CD player
- USB & AUX input
- Smart phone Integration

ICUC Infotainment Screens

Use the Menu Up and Menu Down to navigate the infotainment screens:

1. Audio: AM/FM/Weather, SiriusXM, CD, USB, AUX. See Fig. 74,Infotainment: Radio.
2. Telephone: shows signal strength, battery level, phone number, and active call length. See Fig. 75,Infotainment: Active Call.

Fig 74, Infotainment: Radio

Fig 75, Infotainment: Active Call

4.04.04 ICUC Audio Features

Radio and Other Audio Sources

Radio controls are located on the steering wheel. Volume up and down buttons are on the left-hand switch pod.

Fig 76, Infotainment: Radio

Radio stations, presets, and other audio sources can be accessed under Audio.

1. Select the single bar note icon to open the infotainment menu. The last infotainment menu accessed will open.
2. If not on the Audio screen, press the Up arrow in the left-hand steering wheel switch pod to move to this screen.
3. Press OK on the left-hand steering wheel switch pod to access Audio Settings.
4. Use the Right and Left arrows to navigate from one audio source to another—from radio to USB for example.
5. Use the Up and Down arrows to navigate through an audio options list of choices. Choices can vary depending on the number of audio sources available and saved presets.
6. Press OK on the left-hand steering wheel switch pod to select an audio source. The audio source is selected.
7. Press the Back button to return to the main Audio screen.

   Weather Radio (WX)

   Weather Radio is an option under Audio.

   Weather radio channels WX1 through WX7 correspond to frequencies 162.400 MHz though 162.550 MHz. These are the standard weather radio channels used by NOAA Weather Radio in the United States, Weatheradio Canada/Radio-météo Canada in Canada, and SARMEX in Mexico. Each nationwide system consists of a network of radio stations broadcasting official weather warnings, watches, advisories, forecasts and other non-weather related hazard information including news on natural disasters (earthquakes, avalanches, floods), environmental hazards (oil spills, chemical releases), and public safety messages (AMBER alerts, network outages). All services operate 24 hours a day, 7 days a week.

   The average range for reception from a transmitter is approximately 40 miles (60 km).

Adjusting the Volume

Volume can be adjusted up using the VOL+ and down using the —VOL switches in the left-hand steering wheel switch pod.

4.04.05 ICUC Telephone Features

Start call and end call buttons are on the right-hand switch pod.

Telephone is the second screen under infotainment. The main telephone screen shows the connected phones current signal and battery strength. If a call is in progress, the screen will show the phone number and call length.

Infotainment: Active Call

Telephone settings displays the phone's call history, contacts, and any contact presets.

Fig 77, Infotainment: Active Call

1. Select the single bar note icon to open the infotainment menu. The last infotainment menu accessed will open.
2. If not on the Telephone Screen, use the Down arrow in the left-hand steering wheel switch pod to move to this screen.
3. When on the Telephone screen, select OK on the left-hand steering wheel switch pod to access Telephone Settings.
4. Use the Right and Left arrows to navigate from one telephone setting to another—from contacts to missed calls for example.
5. Use the Up and Down arrows in the left-hand steering wheel switch pod to navigate through the current Telephone Settings list of choices.
6. Press OK on the left-hand steering wheel switch pod to choose an option.
7. Press the Back left-hand steering wheel switch pod to return to the main screen.

4.05 Analog Instruments

4.05.01 Air Intake Restriction Gauge

Physical instruments are listed here in alphabetical order. Some are optional and therefore not found in every vehicle. Digital instruments and gauges are described in the ICUC section.

The air intake restriction gauge indicates the vacuum on the engine side of the air cleaner. On standard installations, it is mounted on the air intake duct in the engine compartment, and has a go/no-go restriction indicator without graduations. See Fig. 78,Manual-Reset Air Restriction Indicator, Go/No-Go. As an option, a graduated indicator, shown in Fig. 79,Air Intake Restriction Indicator, Graduated, on the air intake duct or, for easier viewing, a dash-mounted restriction gauge may be installed.

Fig 78, Manual-Reset Air Restriction Indicator, Go/No-Go

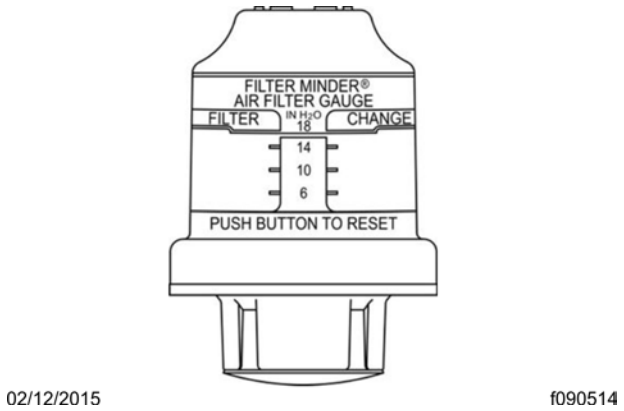

Fig 79, Air Intake Restriction Indicator, Graduated

Air intake restriction vacuum is measured in inches of water (in H_2O). For vehicles equipped with a graduated indicator or a restriction gauge on the dash, check the gauge with the engine off. If the yellow signal stays locked in the red zone once the engine is shut down, or is at or above the values shown in Table 5,Air Intake Maximum Restriction Values (in$H_2$0, the air cleaner element needs to be replaced.

Table 5, Air Intake Maximum Restriction Values (in$H_2$0

Engine Make	GHG14, GHG17, and GHG21 Engines
Cummins	25
Detroit	18

Table 5, Air Intake Maximum Restriction Values (in$H_2$0

NOTE: Rain or snow can wet the filter and cause a temporary high reading.

4.05.02 Application Air Pressure Gauge

An application air pressure gauge, shown in Fig. 80,Application Air Pressure Gauge, registers the air pressure being used to apply the brakes, and should be used for reference only. The gauge will not register air pressure until the foot brake pedal is depressed or the trailer hand brake is applied.

Fig 80, Application Air Pressure Gauge

4.05.03 Coolant Temperature Gauge

NOTICE:

A sudden increase in coolant temperature may indicate engine or cooling system failure. Bring the vehicle to a safe stop and investigate the cause to prevent further damage. Do not operate the engine until the cause has been determined and corrected.

During normal engine operation, the coolant temperature gauge should read 175 to 195°F (79 to 91°C). If the temperature remains below 160°F (71°C), inspect the cooling system to determine the cause. See Fig. 81,Analog Coolant Temperature Gauge - ICUC.

Fig 81, Analog Coolant Temperature Gauge - ICUC

For Detroit engines, if coolant temperature rises above the maximum temperature listed in Table 6, Maximum Coolant Temperature, the CHECK engine lamp will illuminate. If the condition does not improve, the STOP engine lamp will also illuminate and an audible warning will sound. The engine will then derate or shut down, depending on the type of engine protection system installed.

For Cummins engines, the fan will come on when coolant temperatures reaches 215°F (101°C) and the check engine light will illuminate when coolant temperature rises above the maximum temperature listed in Table 6, Maximum Coolant Temperature

Table 6, Maximum Coolant Temperature

Engine Make	Temperature: °F (°C)
Cummins	221 (105)
Detroit DD13/DD15/DD16	234 (112)

Table 6, Maximum Coolant Temperature

4.05.04 Drive Axle Oil Temperature Gauges

NOTICE:
A sudden increase in oil temperature that is not caused by a load increase may indicate mechanical failure. Bring the vehicle to a safe stop and investigate the cause to prevent further damage. Do not operate the vehicle until the cause has been determined and corrected.

During normal operation, the drive axle oil temperature gauges should read as follows:

- 160 to 220°F (71 to 104°C) for Detroit Classic Model 2, 4, and 6 axles.
- 160 to 329°F (71 to 165°C) for Detroit New Final Drive (NFD) axles.

- 160 to 220°F (71 to 104°C) for Meritor™ drive axles.
- 180 to 200°F (82 to 93°C) for Dana Spicer® drive axles.

Under heavy loads, such as when climbing steep grades, temperatures that exceed the normal oil temperature range for a short period are not unusual. If the temperature returns to normal when the load decreases, there is no problem. See Fig. 82,Drive Axle Oil Temperature Gauge (rear drive axle gauge shown).

Fig 82, Drive Axle Oil Temperature Gauge (rear drive axle gauge shown)

4.05.05 Engine Oil Pressure Gauge

NOTICE:
A sudden decrease or absence of oil pressure may indicate mechanical failure. Bring the vehicle to a safe stop and investigate the cause to prevent further damage. Do not operate the engine until the cause has been determined and corrected.

Fig 83, Analog Engine Oil Pressure Gauge - ICUC

Except for Detroit Gen 5 DD13 and DD15 engines, the engine oil pressure gauge, shown in Fig. 83,Analog Engine Oil Pressure Gauge - ICUC, displays the current engine oil pressure. If engine oil pressure falls below the minimum levels shown in Table 7,Minimum Engine Oil Pressure, the CHECK engine lamp will illuminate. If the condition does not improve, the STOP engine lamp will also illuminate and an audible warning will sound. The engine will then derate or shut down, depending on the type of engine protection system installed.

NOTE: Oil pressures are given with the engine at operating temperature. With the engine cold, oil pressure may be higher. Individual engines may vary from the listed pressures; observe and record pressures when the engine is new to create a guide for checking engine condition.

Table 7, Minimum Engine Oil Pressure

Engine Model	At Idle Speed:† [1] psi (kPa)	At Rated RPM:‡ [2] psi (kPa)
Cummins	15 (103)	35 (241)
Detroit Gen 5 DD13/DD15	50 (344)	50 (344)
All Other Detroit Engines	14 (97)	55 (350)

1. † Standard idle speed is 600 RPM. Actual engine idle speed can vary ±100RPM depending on transmission type.
2. ‡ All Detroit heavy-duty engines are rated at 1800 RPM.

Table 7, Minimum Engine Oil Pressure

For Detroit Gen 5 DD13 and DD15 engines, the gauge will read a steady 50 psi (344 kPa) with normal engine oil pressure. If the engine oil pressure is low, the CHECK lamp will illuminate and the oil pressure gauge will read 25 psi. If the condition does not improve, the STOP lamp will illuminate, an audible warning will sound, and the gauge will read 0 psi. The engine will then derate or shut down, depending on the type of engine protection system installed.

4.05.06 Engine Oil Temperature Gauge

NOTICE:

A sudden increase in oil temperature that is not caused by a load increase may indicate mechanical failure. Bring the vehicle to a safe stop and investigate the cause to prevent further damage. Do not operate the engine until the cause has been determined and corrected.

During normal operation, the optional engine oil temperature gauge should read in the following temperature range:

- 200 to 260°F (93 to 126°C) for Detroit and Cummins engines

Under heavy loads, such as when climbing steep grades, temperatures that exceed the normal oil temperature range for a short period are not unusual. If the temperature returns to normal when the load decreases, there is no problem. See Fig. 84, Engine Oil Temperature Gauge.

Fig 84, Engine Oil Temperature Gauge

4.05.07 Fuel/Diesel Exhaust Fluid (DEF) Gauge

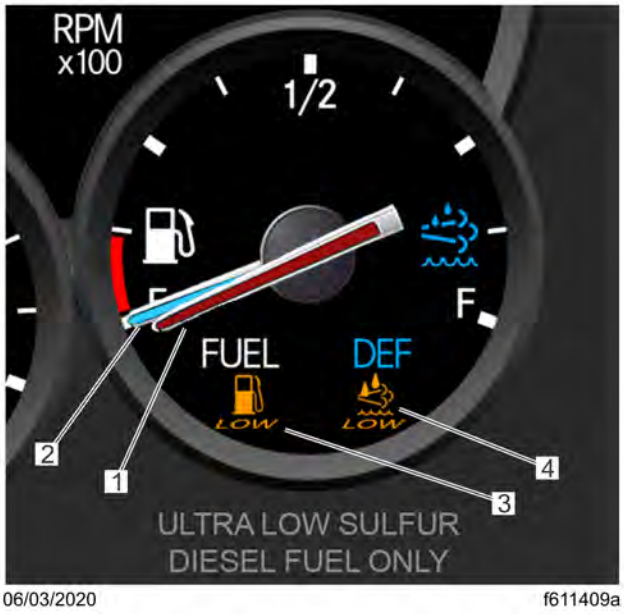

1. Fuel Gauge Pointer
2. DEF Gauge Pointer
3. Low Fuel Warning Lamp
4. Low DEF Warning Lamp

Fig 85, Fuel/DEF Gauge

The fuel and DEF levels can be measured in a dual purpose fuel/DEF level gauge. See Fig. 85,Fuel/DEF Gauge.

The diesel fuel and DEF levels are indicated on the gauge. A low fuel warning lamp illuminates amber when the diesel fuel level registers 1/8th of capacity. The low DEF warning lamp illuminates amber when the DEF level reaches 10 percent of capacity. See 13.01 Greenhouse Gas Emissions and Fuel Consumption Standards Emissions and Fuel Efficiency for details of the DEF gauge functions.

4.05.08 Primary and Secondary Air Pressure Gauges

WARNING:

If air pressure falls below minimum pressure, the braking ability of the vehicle will be limited. Slow the vehicle down and bring it to a gradual stop. Do not attempt to move the vehicle until air pressure has risen above the minimum level. Moving a vehicle without adequate braking power could cause an accident resulting in property damage, personal injury, or death.

Air pressure gauges register the pressure in the primary and secondary air systems. See Fig. 86,Analog Combined Application Air Pressure Gauge - ICUC. Normal pressure, with the engine running, is 100 to 120 psi (689 to 827 kPa) in both systems.

Fig 86, Analog Combined Application Air Pressure Gauge - ICUC

NOTE: The low-air warning buzzer only works when the park brake is released. The low-air warning buzzer is silenced when the park brake is set.

If air pressure drops below approximately 70 psi (483 kPa), a warning light illuminates and the driver display shows a warning. A low-air warning buzzer also sounds if the park brake is not set.

NOTE: If the pressure in both air systems drops below 70 psi, the parking brakes will drag or apply.

4.05.09 Speedometer

Two physical speedometer options are available. The U.S. version of the speedometer, shown in Fig. 87,Analog Speedometer - ICUC, registers speed in both miles per hour (mph) and kilometers per hour (km/h), with mph in larger numbers. The metric version of the speedometer face reverses this arrangement, with km/h in larger numbers.

Fig 87, Analog Speedometer - ICUC

4.05.10 Suspension Air Pressure Gauge

A suspension air pressure gauge, shown in Fig. 88,Suspension Air Pressure Gauge, registers the air pressure applied to the vehicle air suspension.

Fig 88, Suspension Air Pressure Gauge

4.05.11 Tachometer

The tachometer or rev counter indicates engine speed in revolutions per minute (rpm) and serves as a guide for shifting the transmission and keeping the engine in the appropriate rpm range. The tachometer has only one unit of measurement, 0-2500 rpm. For low idle and rated rpm, consult your vehicle's engine identification plate. See Fig. 89,Analog Tachometer - ICUC.

Fig 89, Analog Tachometer - ICUC

4.05.12 Transmission Fluid Temperature Gauge

The transmission fluid temperature gauge, shown in Fig. 90, Transmission Fluid Temperature Gauge, measures the transmission lubricant operating temperature. Temperatures vary by application, but the transmission fluid temperature gauge reading should not exceed 250°F (121°C).

Fig 90, Transmission Fluid Temperature Gauge

NOTICE:

A sudden increase in transmission fluid temperature that is not caused by a load increase may indicate mechanical failure. Bring the vehicle to a safe stop and investigate the cause to prevent further damage. Do not operate the vehicle until the cause has been determined and corrected.

Under heavy loads, such as when climbing steep grades, temperatures that exceed the normal oil temperature range for a short period are not unusual. If the temperature returns to normal when the load decreases, there is no problem.

4.05.13 Turbocharger Boost Pressure Gauge

A turbocharger boost pressure gauge, shown in Fig. 91, Turbocharger Boost Pressure Gauge, indicates the pressure in the intake manifold, in excess of atmospheric pressure, being created by the turbocharger.

Fig 91, Turbocharger Boost Pressure Gauge

4.05.14 Voltmeter

The voltmeter indicates the vehicle charging system voltage when the engine is running and the battery voltage when the engine is off. By monitoring the voltmeter, the driver can stay aware of potential battery charging problems and have them fixed before the batteries discharge enough to create starting difficulties.

The voltmeter will normally show approximately 13.7 to 14.1 volts when the engine is running. The voltage of a fully charged battery is 12.7 to 12.8 volts when the engine is off. Battery voltage under 12.0 volts is considered a low battery, and a completely discharged battery will produce only about 11.0 volts.

If the voltmeter shows an undercharged or overcharged condition for an extended period, have the charging system and batteries checked at an authorized Western Star service facility.

On a vehicle equipped with a battery isolator system, the voltmeter measures the average voltage of all the batteries when the engine is running. When the engine is off, the voltmeter shows only the isolated battery voltage and does not indicate the voltage of the engine-starting batteries.

4.06 Warnings, Indicators, and Messages

4.06.01 Audible Alerts: ICUC

An audible alert sounds whenever one of the following conditions exists:

- Engine oil pressure falls below the minimum preset value.
- Coolant temperature rises above the maximum preset value.
- Air pressure falls below approximately 70 psi (483 kPa).
- Parking brake is set with the vehicle moving faster than 2 mph (3 km/h).
- System voltage falls below 11.9 volts.
- Door is unlatched with the parking brake off.

Optional audible alert sounds whenever one of the following conditions exists:

- Driver seat occupancy sensor reads someone in the seat with the seat belt not fastened and the parking brake off.
- Key is in the ignition and the door is unlatched.

Audible alerts associated with Detroit Assurance are discussed with each Detroit Assurance feature. See 6.02.02 Multipurpose Camera 2 (MPC2) Driver Assistance Features.

4.06.02 Warnings, Indicators, and Messages

Warning and indicator lights (telltales) with icon symbols are displayed on the physical dashboard and on ICU screens. The positions of the telltales and warnings vary, but most telltale symbols are standard. See Table 8,Telltales, Indicator Icons, and Messages — Engine System , Table 9,Telltales, Indicator Icons, and Messages — Transmission, Table 10,Telltales, Indicator Icons, and Messages — Brakes, Table 11,Telltales, Indicator Icons, and Messages — Driving Safety, Table 12,Telltales, Indicator Icons, and Messages — Suspension, Table 13,Telltales, Indicator Icons, and Messages — Battery, Table 14, Telltales, Indicator Icons, and Messages — Tire-Related Indicators, Table 15,Telltales, Indicator Icons, and Messages — Fuel, Table 16,Telltales, Indicator Icons, and Messages — Diesel Exhaust Fluid (DEF) and Diesel Particulate Filter (DPF) , Table 17,Telltales, Indicator Icons, and Messages — Lamps, Table 18,Telltales, Indicator Icons, and Messages — Passenger Safety, Table 19,Telltales, Indicator Icons, and Messages — Weather, Table 20, Telltales, Indicator Icons, and Messages — ICU Application Icons, and Table 21,Telltales, Indicator Icons, and Messages — Air Gauge Indicators for a list of different warnings and telltales in addition to messages and popup screens.

The colors of telltales and warnings indicate the hazard level: red (warning), amber (caution), green and blue (active status), grey (passive status), white (informational). Blue is currently used to indicate an active phone call, that a software download is available, and that utility lamps and high beams are on.

IMPORTANT: Depending upon local jurisdictional emissions guidelines, vehicles and/or engines that are domiciled outside of the U.S. and Canada may not be compliant with EPA10 or GHG21 regulations. Noncompliant vehicles may not be equipped with all of the telltales shown in the tables below.

Table 8, Telltales, Indicator Icons, and Messages — Engine System

Telltale	Color	Description		Related Messages
	Red	Stop Engine*	Indicates a serious fault that requires engine shutdown immediately. The engine protection system will reduce the maximum engine torque and speed, and, if the condition does not improve, will shut down the engine within 30 to 60 seconds. Safely bring the vehicle to a stop on the side of the road and shut down the engine as soon as the red light is seen. **If the engine shuts down while the vehicle is in a hazardous location, turn the key to the OFF position for a few seconds, then restart the engine and move the vehicle to a safer location.**	Various
	Red	Engine Oil Level Warning	Indicates engine oil is low. Find a safe location to stop and check engine oil level. Top off as needed.	
	Red	Low Engine Oil Pressure	Indicates the engine oil pressure is below the minimum allowable pressure.	ICUC Warning
	Red	Engine Oil Temperature Warning		
	Red	Low Coolant Level		
	Red	High Coolant Temperature	Indicates the coolant temperature is above the maximum allowable temperature.	IC UC Warning
	Amber	Check Engine*	Indicates an engine condition (low oil pressure, low coolant level, high coolant temperature, high DPF soot level, uncontrolled DPF regeneration, or battery voltage 11.9 volts or less) that requires correction.	Various

Telltale	Color	Description		Related Messages
			Correct the condition as soon as possible. If the condition worsens, the STOP engine lamp will illuminate.	
	Amber	Engine Malfunction Indicator Lamp (MIL)*	A steadily illuminated amber MIL lamp indicates an engine fault that effects emissions.	
	Amber	Engine Malfunction Indicator Lamp (MIL)*	Alternate Engine Malfunction Indicator lamp. A steadily illuminated amber MIL lamp indicates an engine fault that effects emissions.	
	Amber	Engine Oil Level Caution		
	Amber	Engine Oil Pressure Caution		
	Amber	Low Coolant Level Caution		
	Amber	High Coolant Temperature Caution		
	Amber	Start Blocked	Indicates that the system is preventing the starter from cranking. This can occur when the ignition switch is turned to START before the gauge sweep has completed. NOTE: Display of the Start Blocked screen does not indicate a problem with the starter. Turn the ignition switch back to ON, wait for the message to turn off, then turn the ignition switch to START again.	 ICUC Notice
	Amber	Start Blocked	Alternative Telltale for Start Blocked.	
	Green	Start Engine		
	Green	Optimized Idle Active	Indicates optimized idle is active.	

Table 8, Telltales, Indicator Icons, and Messages — Engine System

*See 13.01 Greenhouse Gas Emissions and Fuel Consumption Standards Emissions and Fuel Efficiency for an explanation of the after treatment system (ATS) warning indicators, and actions required to avoid further engine protection steps.

Table 9, Telltales, Indicator Icons, and Messages — Transmission

Telltale	Color	Description		Related Messages
	Red	Transmission Fluid Level Warning	Indicates low transmission fluid level. Safely bring the vehicle to a stop as soon as possible.	
	Amber	Caution Check Transmission	Indicates an undesirable transmission condition.	
	Amber	Low Transmission Fluid Level Caution	Indicates low transmission fluid level.	
	Amber	High Transmission Temperature	Indicates transmission is overheating.	 ICUC Caution

Table 9, Telltales, Indicator Icons, and Messages — Transmission

Table 10, Telltales, Indicator Icons, and Messages — Brakes

Telltale	Color	Description		Related Messages
	Red	Low Brake Air Pressure (EPA10 and Newer)	Indicates air pressure in the primary or secondary reservoir has dropped below approximately 70 psi (483 kPa).	
	Red	Low Brake Air Pressure (EPA10 and Newer)	Alternate low brake air pressure telltale. Indicates air pressure in the primary or secondary reservoir has dropped below approximately 70 psi (483 kPa).	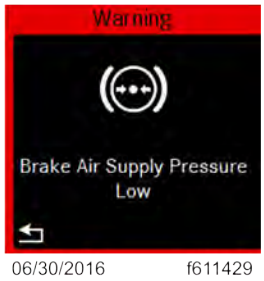 ICUC Warning
	Red	Parking Brake Engaged (EPA10 and Newer)	Indicates the parking brake is engaged.	
	Red	Parking Brake Engaged (EPA10 and Newer)	Alternative icon indicating the parking brake is engaged.	

Telltale	Color	Description		Related Messages
	Amber	Winch Brake Caution		
	Amber	Work Brake Caution		

Table 10, Telltales, Indicator Icons, and Messages — Brakes

Table 11, Telltales, Indicator Icons, and Messages — Driving Safety

Telltale	Color	Description		Related Messages
	Amber	Electronic Stability Control (ESC) Active	Flashing indicates a stability event has been detected, and the ESC system is active. Solid illumination indicates a problem with the stability system. Repair the ESC system immediately to ensure full stability capability.	
	Amber	Electronic Stability Program Off		
	Amber	Tractor Anti-Lock Braking System (ABS)	Momentary illumination indicates the vehicle ABS is engaged. Solid illumination indicates a problem with the vehicle ABS. Repair the ABS immediately to ensure full braking capability.	
	Amber	Trailer Anti-Lock Braking System (ABS)	Momentary illumination indicates the trailer ABS is engaged. Solid illumination indicates a problem with the trailer ABS. Repair the ABS immediately to ensure full braking capability.	
	Amber	Active Brake Assist Active	Indicates Active Brake Assist is engaged.	
	Amber	Active Brake Assist Unavailable (GHG14 and newer)	Indicates the Active Brake Assist system is not available.	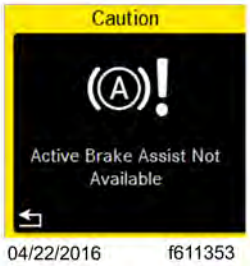 ICUC Caution

Telltale	Color	Description		Related Messages
ICUC Telltale	Amber	Adaptive Cruise Control Not Available	Indicates that Adaptive Cruise Control (ACC) is not available NOTE: Only on vehicles equipped with a radar-based collision warning and mitigation system (CWS/CMS).	ICUC Caution If ACC is not available, Active Lane Assist (ALA) will not be available.
	Amber	Hill Holder Assist Off		
	Amber	Hill Start Aid Engaged		
	Grey	Brake Hold Mode Engaged	Indicates that brake hold mode is active. The service brake remains engaged when the driver takes their foot off the brake pedal.	Brake hold mode is released when the accelerator pedal is pressed, the service brake is set, or the park brake is set.
	Green	Descent Cruise Control Mode Engaged		
	Green	Engine Brake Engaged	Indicates the engine brake is enabled.	
	Amber	IPPC Error		
	Green	Adaptive Cruise Control Active		
	Red	Adaptive Power Steering (APS) Error		An error with APS deactivates Active Lane Assist (ALA).
	Amber	Gear Teach Mode in Progress		
	Green	AERO active	Indicates that aerodynamic height control (AERO) is active.	

Table 11, Telltales, Indicator Icons, and Messages — Driving Safety

Table 12, Telltales, Indicator Icons, and Messages — Suspension

Telltale	Color	Description		Related Message
	Amber	Suspension Higher than Normal Ride Height / Axle Lifted	Indicates the current rear suspension height is above the normal ride height.	ICUC Caution
	Amber	Suspension Lower Than Normal Ride Height / Axle Dropped	Indicates the current rear suspension height is below the normal ride height.	ICUC Caution
	Amber	Suspension Height		
	Amber	5th Wheel Adjust		

Table 12, Telltales, Indicator Icons, and Messages — Suspension

Table 13, Telltales, Indicator Icons, and Messages — Battery

Telltale	Color	Description		Related Messages
	Red	Battery Critical		
	Red	Battery Failure		
	Amber	Battery Failure		

Table 13, Telltales, Indicator Icons, and Messages — Battery

Table 14, Telltales, Indicator Icons, and Messages — Tire-Related Indicators

Telltale	Color	Description		Related Messages
	Red	Low Tire Pressure Warning	Indicates a notable loss of tire pressure in at least one tire.	If a tire monitoring system is available, the tire(s) with low pressure will be highlighted red.
	Amber	Low Tire Pressure Warning	Indicates low tire pressure in at least one tire.	If a tire monitoring system is available, the tire(s) with low pressure will be highlighted amber.
	Amber	Automatic Traction Control (ATC) Active	Flashing indicates a wheel spin event has been detected, and the ATC system is active.	
	Amber	Automatic Traction Control (ATC) Deactivated	Indicates the ATC SPIN button has been pressed to allow wheel slip.	ICUC Caution

Table 14, Telltales, Indicator Icons, and Messages — Tire-Related Indicators

Table 15, Telltales, Indicator Icons, and Messages — Fuel

Telltale	Color	Description		Related Messages
	Amber	Low Fuel	Indicates low fuel level. Refill the main fuel tank.	
	Amber	Water in Fuel Warning	Indicates the fuel may contain water. Drain any water collected in the fuel/water separators.	

Table 15, Telltales, Indicator Icons, and Messages — Fuel

Table 16, Telltales, Indicator Icons, and Messages — Diesel Exhaust Fluid (DEF) and Diesel Particulate Filter (DPF)

Telltale	Color	Description		Related Messages
	Red	Diesel Particulate Filter Critical	Indicates a parked regen is required immediately.	06/10/2016 f611403 ICUC Warning
	Amber	Diesel Particulate Filter (DPF) Status	Solid illumination indicates a regen is required. Change to a more challenging duty cycle (such as highway driving) to raise exhaust temperatures for at least twenty minutes, or perform a parked regen. Blinking indicates that a parked regen is required immediately. An engine derate and shutdown will occur.	06/10/2016 f611401 ICUC Caution
	Amber	Diesel Particulate Filter Inhibited	Occurs only when the regent inhibit switch is pressed.	
	Green	Diesel Particulate Filter Regeneration in Progress	Indicates a regen is in progress.	
	Amber	High Exhaust System Temperature (HEST)*	Slow (10-second) flashing indicates a regeneration (regen) is in progress. IMPORTANT: When the HEST lamp is illuminated, do not park the vehicle near objects that can be harmed by high temperatures or flammable materials. Solid illumination indicates high exhaust temperatures at the outlet of the tail pipe when speed is below 5 mph (8 km/h).	

Telltale	Color	Description		Related Messages
	Amber	Low Diesel Exhaust Fluid	Indicates low diesel exhaust fluid. Fill the DEF tank.	See 13.01 Greenhouse Gas Emissions and Fuel Consumption Standards for an explanation of the after treatment system (ATS) warnings, and actions required to avoid further engine protection steps.
	Amber	Low Diesel Exhaust Fluid	Alternative icon to indicate Low Diesel Exhaust Fluid. Fill the DEF tank.	See 13.01 Greenhouse Gas Emissions and Fuel Consumption Standards for an explanation of the after treatment system (ATS) warnings, and actions required to avoid further engine protection steps.

Table 16, Telltales, Indicator Icons, and Messages — Diesel Exhaust Fluid (DEF) and Diesel Particulate Filter (DPF)

Table 17, Telltales, Indicator Icons, and Messages — Lamps

Telltale	Color	Description		Related Information
	Green	Right-Turn Indicator On	Flashing indicates the outside right-turn signal lamps are activated.	
	Green	Left-Turn Indicator On	Flashing indicates the outside left-turn signal lamps are activated.	
	Blue	High-Beams On	Indicates the high-beam headlights are on.	
	Green	Low-Beams On	Indicates the low-beam headlights are on.	
	Blue	Automatic High-Beams On	Indicates the high-beam headlights have been set to automatic and are on.	
	Grey	Automatic High-Beams Off	Indicates the high-beam headlights have been set to automatic and are off.	
	Green	Automatic Low-Beams On	Indicates the low-beam headlights have been set to automatic and are on.	
	Grey	Automatic Low-Beams Off	Indicates the low-beam headlights have been set to automatic and are off.	

Telltale	Color	Description		Related Information
	Green	Daytime Running Lamps On	Indicates the daytime running lamps are on.	
	Blue	Auxiliary Drive Lamps On	Indicates the auxiliary drive lamps are on.	
	Blue	Utility Lamps On	Indicates the utility lamps are on.	
	Green	Taillights / Marker Lamps On	Indicates the taillights, aka marker lamps, are on.	

Table 17, Telltales, Indicator Icons, and Messages — Lamps

Table 18, Telltales, Indicator Icons, and Messages — Passenger Safety

Telltale	Color	Description		Related Message
	Red	Unfastened Seat Belt	On some vehicles, activates with an audible alert when the system detects that the parking brake is off and the driver seat belt is not fastened. On vehicles with a seat occupancy sensor, the seat being occupied, seat belt not fastened, and parking brake off will cause this warning to activate. On other vehicles, this lamp illuminates for 15 seconds when the ignition is first turned on.	
	Amber	Supplemental Restraint System (SRS) Error	Illuminates when ignition is turned on and then goes off. Telltale not illuminating when ignition turns on or remaining lit indicates a malfunction in the restraint system. Restraint system components may be triggered unintentionally or may not deploy as intended during an accident. Have the restraint system checked and repaired immediately.	

Table 18, Telltales, Indicator Icons, and Messages — Passenger Safety

Table 19, Telltales, Indicator Icons, and Messages — Weather

Telltale	Color	Description		Related Pop-Up Message
	White	Snowflake	Indicates ambient air temperature has dropped below 34°F (1°C). Pay attention to road conditions and watch for ice.	 ICUC Caution

Table 19, Telltales, Indicator Icons, and Messages — Weather

Table 20, Telltales, Indicator Icons, and Messages — ICU Application Icons

Telltale	Color	Description		Related Information
	Blue	Active Phone Call	Indicates a phone is connected to the ICU and a call is active.	The phone screen in the infotainment section of the ICU will also show an active call, including the number being called and call length.

Table 20, Telltales, Indicator Icons, and Messages — ICU Application Icons

Table 21, Telltales, Indicator Icons, and Messages — Air Gauge Indicators

Telltale	Color	Description		Related Messages
	Red	Primary Air Warning		
	Red	Secondary Air Warning		
	Red	Application Air Warning		
	Amber	Primary Air Caution		

Table 21, Telltales, Indicator Icons, and Messages — Air Gauge Indicators

4.06.03 Engine Protection System

WARNING:

When the red STOP engine lamp illuminates, most engines are programmed to shut down automatically within 30 seconds. The driver must immediately move the vehicle to a safe location at the side of the road to prevent causing a hazardous situation that could cause bodily injury, property damage, or severe damage to the engine.

See 13.01 Greenhouse Gas Emissions and Fuel Consumption Standards for an explanation of the aftertreatment system (ATS) warning indicators, and actions required to avoid further engine protection steps.

The STOP engine lamp illuminates when the engine protection system is activated in one of two ways. On some engines, the engine protection system will derate the engine, allowing it to run at lower rpm and slower vehicle speed. Drive the vehicle to a safe location or to a service facility.

IMPORTANT: Safely bring the vehicle to a stop on the side of the road and shut down the engine as soon as the red light is seen. If the engine shuts down while the vehicle is in a hazardous location, turn the key to the OFF position for a few seconds, then restart the engine and move the vehicle to a safer location.

On other engines, the engine protection system will shut down the engine. It will first derate the engine, then shut it down completely 30 to 60 seconds after the indicator illuminates (depending on the critical fault type) if the condition does not improve. Bring the vehicle to a stop on the side of the road before the engine shuts down.

Some vehicles may have a shutdown-override switch, which may be used to momentarily override the shutdown sequence. See 11.01.01 Engine Starting Engine Starting, Operation, and Shutdown for detailed information regarding the shutdown process.

IMPORTANT: Do not attempt to restart the engine while the vehicle is moving. Bring the vehicle to a safe stop, then restart the engine.

To restart the engine, turn the ignition to OFF, leave it there a few seconds, then turn the ignition to START. The engine will run for a short period and shut down again if the condition does not improve.

5.01 Ignition Switch.....106
5.02 Lighting Controls.....107
5.02.01 General Information.....107
5.02.02 Exterior Lighting Controls.....107
5.02.03 Interior Lighting Controls.....113
5.03 Horn Controls.....116
5.04 Powertrain Controls.....117
5.04.01 Aftertreatment System Regen Switches.....117
5.04.02 Axle Switches.....118
5.04.03 Engine Brake Switches.....119
5.04.04 Engine Fan Switch.....120
5.04.05 Hill Start Aid Override Switch.....120
5.04.06 Power Take-Off (PTO) Switch.....121
5.04.07 Transmission Controls.....121
5.05 Dash-Mounted Brake Controls.....122
5.06 Windshield Wiper and Washer Controls.....124
5.07 Suspension Controls.....127
5.07.01 Air Suspension Dump Switch.....127
5.07.02 Air Suspension Height Control Switch.....127
5.08 Trailer Controls.....128
5.09 Adjustable Steering Column Controls.....129
5.10 Climate Controls.....130
5.10.01 Mirror, Windshield, and Headlight Heat Controls.....130
5.10.02 Cab Climate Control.....131
5.10.03 Sleeper Climate Control.....132
5.11 Seat Controls.....133

5. Driver Controls

5.01 Ignition Switch

The ignition switch is located on the left-hand dash, below the headlight switch.

The ignition switch has four positions: OFF, ACC (accessory), ON, and START. See Fig. 92, Ignition Switch.

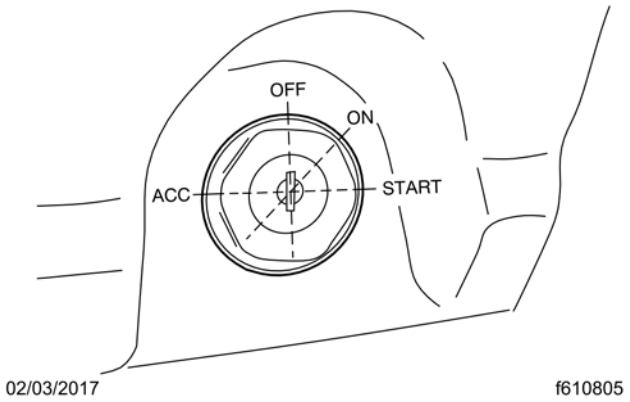

Fig 92, Ignition Switch

In the OFF position, the ignition switch is vertical. The key can be inserted and removed only in the OFF position.

The following functions are operable when the ignition switch is in the OFF position (regardless of whether the key is inserted):

- low-beam headlights
- taillights
- brake lights
- road lights
- dome lights
- clearance lights
- hazard warning lights
- utility lights
- baggage compartment lights
- spotlights
- electric horn
- clock
- refrigerator
- CB radio
- power mirrors
- power receptacle
- fuel heater
- electric oil pan heater

- electric or diesel-fired engine coolant pre-heater

Turn the key counterclockwise to reach the ACC position. In addition to all the functions that are operable in the OFF position, the following functions are operable when the switch is in the ACC position:

- radio/stereo system
- heater and A/C fan
- mirror defogger
- windshield fan
- ether start system
- air dryer
- backup lights

Turn the key clockwise past the OFF position to reach the ON position. With the switch in the ON position, all electrical systems become operable and the warning and indicator lamps illuminate. Wait for three seconds before starting the engine.

IMPORTANT: Do not crank the engine until the ICU self-check is complete.

Turn the key clockwise past the ON position to reach the START position to start the engine. Release the key the moment the engine starts. Do not operate the starter longer than thirty seconds. Allow the starter to cool between attempts. If the starter overheats, the starter protection system will prevent operation of the starter until it has cooled.

The ignition key also locks and unlocks the cab doors.

5.02 Lighting Controls

5.02.01 General Information

Lighting controls discussed in this section include dash-mounted and other switches as well as "automatic" lights that turn on and off based on different vehicle inputs.

Lighting controls included in the vehicle ICU are discussed in 4.01.01 Instrumentation Control Unit.

Unless otherwise noted, light switches on a Western Star vehicle work by toggling the switch up to turn lights ON and down to turn lights OFF.

Dash-mounted switches are backlit to illuminate both the text and icon on the switch. When ON, the icon at the top of dash-mounted switch will illuminate green.

5.02.02 Exterior Lighting Controls

Headlights

The headlight switch is a rotary switch located to the left of the steering column, above the ignition switch. See Fig. 93,Headlight Switch.

1. Fog Lights (optional)—Activate by pulling the switch out when the marker lamps or headlamps are on.
2. Automatic Headlights
3. OFF
4. Marker Lights
5. Headlights

Fig 93, Headlight Switch

Headlights: Automatic

If the vehicle is equipped with a rain-light sensor and the headlight switch is in the 'A' position, the low beam headlamps and all exterior lights activate when the outside light decreases to a pre-set level. The feature will activate in low ambient light within two seconds.

For automatic headlights to function, the following conditions must be met:

- the headlight switch is set to automatic,
- the ignition key is set to on,
- ambient light intensity is measured at Lux < 1500.

If the light level increases beyond a pre-set level, the automatic headlight feature will turn off after 30 seconds.

Headlights: Intelligent High-Beam Control

If equipped, intelligent high-beam control activates the high-beams when there is insufficient light and no oncoming traffic and dims the high-beam when an oncoming vehicle or light is detected.

For intelligent high-beams to function, the following conditions must be met:

- The headlamp switch is set to automatic.
- The high-beam headlamps are turned on.
- The forward facing camera and radar have a clear view of objects in front of the vehicle.

If an object is detected in front of the vehicle, the high beams will turn off and a two second timer will start. Once the timer has elapsed, the high-beams will turn on.

NOTE: The minimum off time setting is controlled by parameters that can be changed in DiagnosticLink®.

Headlight: High-Beam

With the low-beam headlamps on, push the turn-signal lever away from you to turn on the high-beam headlamps. See Fig. 94,Steering Column-Mounted Turn Signal Lever. To turn off the high-beam headlamps, pull the lever to the middle position.

With the low-beam headlamps on, pull the lever towards you to flash the high-beam headlamps momentarily.

When the high-beam headlamps are on, a blue telltale illuminates on the instrument cluster.

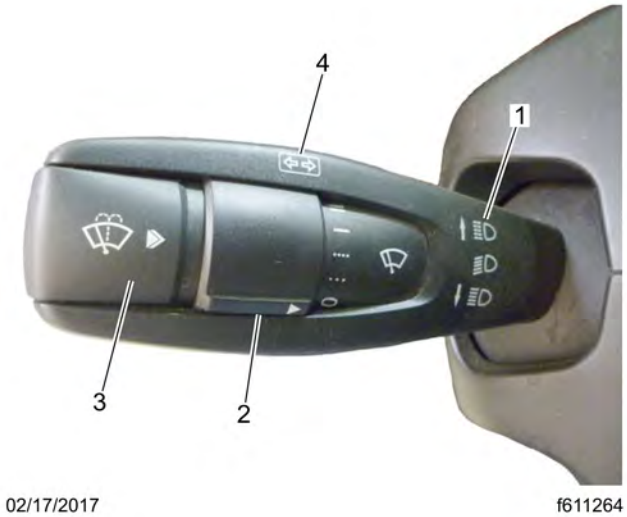

1. Headlight Control Symbols
2. Windshield Wiper Switch
3. Windshield Washer Switch
4. Turn Signal Symbol

Fig 94, Steering Column-Mounted Turn Signal Lever

Headlamps: Auxiliary High Beam Lights

Auxiliary high-beam lights may be located in the front bumper. The auxiliary high beams will illuminate only when the high-beam headlamps are on. They will temporarily switch off when the low-beams are on, then switch back on when the high beams are on again. See Fig.95,Auxiliary High Beam Light Switch for an image of the auxiliary high-beam switch.

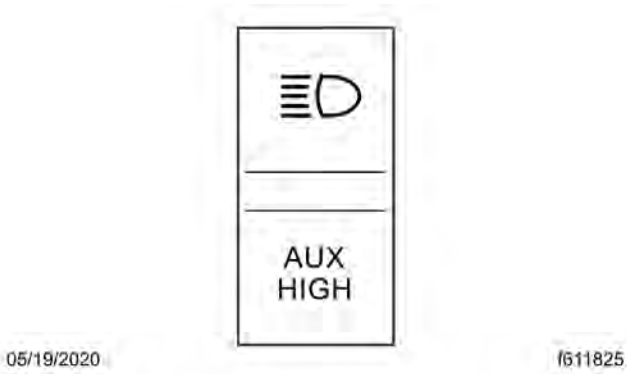

Fig 95, Auxiliary High Beam Light Switch

Headlights: Follow Me Home Feature

This feature provides temporary lighting in the path of the headlamps while walking to a building or other destination.

If the Follow Me Home feature is activated, and if the headlamps were on prior to engine shutdown, the low-beam head-lamps will remain on for nine seconds after the vehicle is parked. If a vehicle door is opened or closed while this feature is active, the timer will add an additional 10 seconds of lighting.

This feature can be temporarily disabled by turning the ignition switch on, or by cycling the headlamps switch from the off position to one of the other two positions.

Backup Lights

Backup lights activate only when the vehicle is in reverse; they are designed to indicate that you are going to or are backing up.

Daytime Running Lights

Daytime running lights (DRL), if equipped, are automatically activated when the ignition is switched on and the parking brake is released. The daytime running lights turn off when the engine falls below 400 rpm, the parking brake is applied, or the headlamps are turned on.

Daytime running lights are mandatory for vehicles domiciled in Canada. Vehicles domiciled in any other location may have an optional override switch (See Fig.96,Daytime Running Lights Override Switch.). This switch enables the driver to deactivate the daytime running lights for a limited period of time.

Fig 96, Daytime Running Lights Override Switch

Fog Lights

Fog lights are designed to reduce glare in foggy conditions. The low-beam headlamps must be on in order to turn the fog lights on. Pull the headlight switch out to activate the fog lights. See item 1 in Fig.93,Headlight Switch.

Hazard Warning Lights

The hazard warning light switch is located on the dash switch panel. See Fig.97,Hazard Warning Switch. The hazard lights can be activated regardless of the ignition switch position.

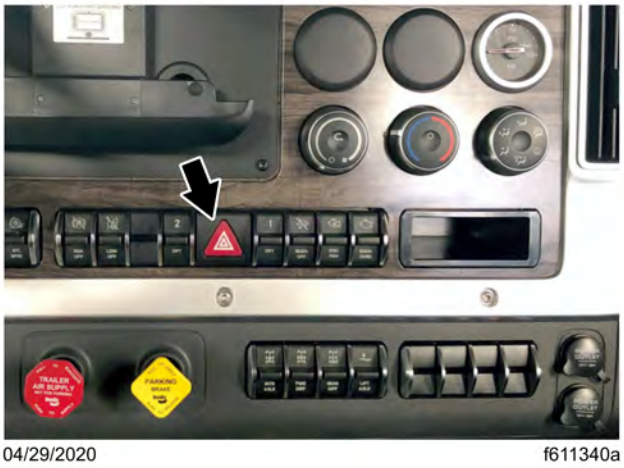

Fig 97, Hazard Warning Switch

To activate the hazard lights, press the center of the switch once. The switch will blink at the same rate that the hazard lights flash. Press the switch again to turn them off.

All the turn signals on the vehicle and trailer will flash simultaneously when the hazard lights are activated.

Marker Lights

Marker lights function as auxiliary safety lights. To turn the marker lights on, turn the headlight switch clockwise past the off position. See Fig.93,Headlight Switch.

Marker Interrupt

NOTE: The marker interrupt feature is not available in all markets.

The marker interrupt switch temporarily flashes the marker lights. The switch is located in the right-hand switch pod of the steering wheel, See item 5, See Fig.98,Steering-Wheel-Mounted Switches.

1. Cruise Accelerate/Resume
2. Quick Access System Settings
3. Cruise Decelerate/Set
4. Phone Hang-Up/Reject
5. Marker Interrupt**
6. Phone Pick-Up
7. Headlamp Interrupt**
8. Cruise Cancel
9. Volume Increment Up
10. Menu Right
11. Volume Increment Down
12. Menu Down
13. Back Button
14. Menu Left
15. Menu Accept (OK)
16. Menu Up
17. **Not available in all markets

Fig 98, Steering-Wheel-Mounted Switches

Plow Lights

If equipped, plow lights are typically mounted on the plow frame of snow plows. See Fig.99,Plow Light Switch for an image of the dash plow light switch.

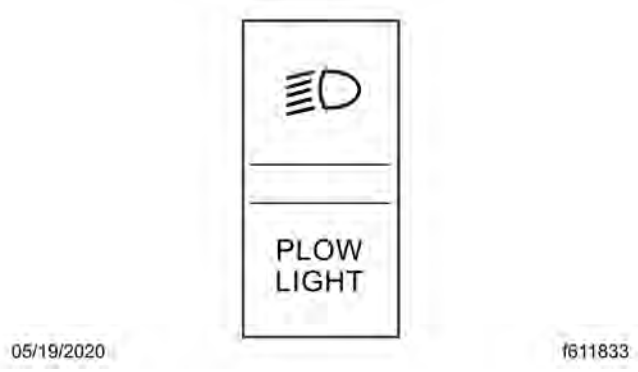

Fig 99, Plow Light Switch

Spotlight

If equipped, the spotlight switch is located on the pivoting handle of the spotlight itself. There may be a single spotlight assembly mounted above the driver's door, or one above each door.

Turn Signals

The turn-signal lever is mounted on the left-hand side of the steering column. Pulling the turn-signal lever up activates the right-turn signal; pushing it down activates the left-turn signal.

When a turn signal is activated, the matching green telltale light flashes on the instrument panel.

The turn-signal lever is typically a *non-canceling* combination turn-signal, windshield wiper/washer switch, and high beam headlight control unit. See Fig.94,Steering Column-Mounted Turn Signal Lever.

If the vehicle is equipped with a *self-canceling* turn signal lever, the lever will automatically return to the neutral position when the steering wheel returns to the straight-ahead position after a turn.

Utility Lights

Utility lights can be swivel-mounted on the upper half of the cab, mounted on the exhaust support, or flush-mounted on the back of the cab or sleeper. See Fig.100,Utility Light Switch for an illustration of the utility lights switch.

Fig 100, Utility Light Switch

5.02.03 Interior Lighting Controls

Interior light controls are listed here in alphabetical order.

Interior Lights may include panel lights, roof lights, foot well and floor lights, courtesy lights, ambient lights, reading lights, task lights, and baggage compartment lights. See Fig.101,Example of Cab and Sleeper Interior Lighting for an illustration of common light locations.

Sleepers may have additional ambient lights and floor lights in addition to rear roof lights, reading lights, task lights, and baggage compartment lights.

Many interior lights have a dimming function. By holding down the switch, the lights can be cycled between bright and dim.

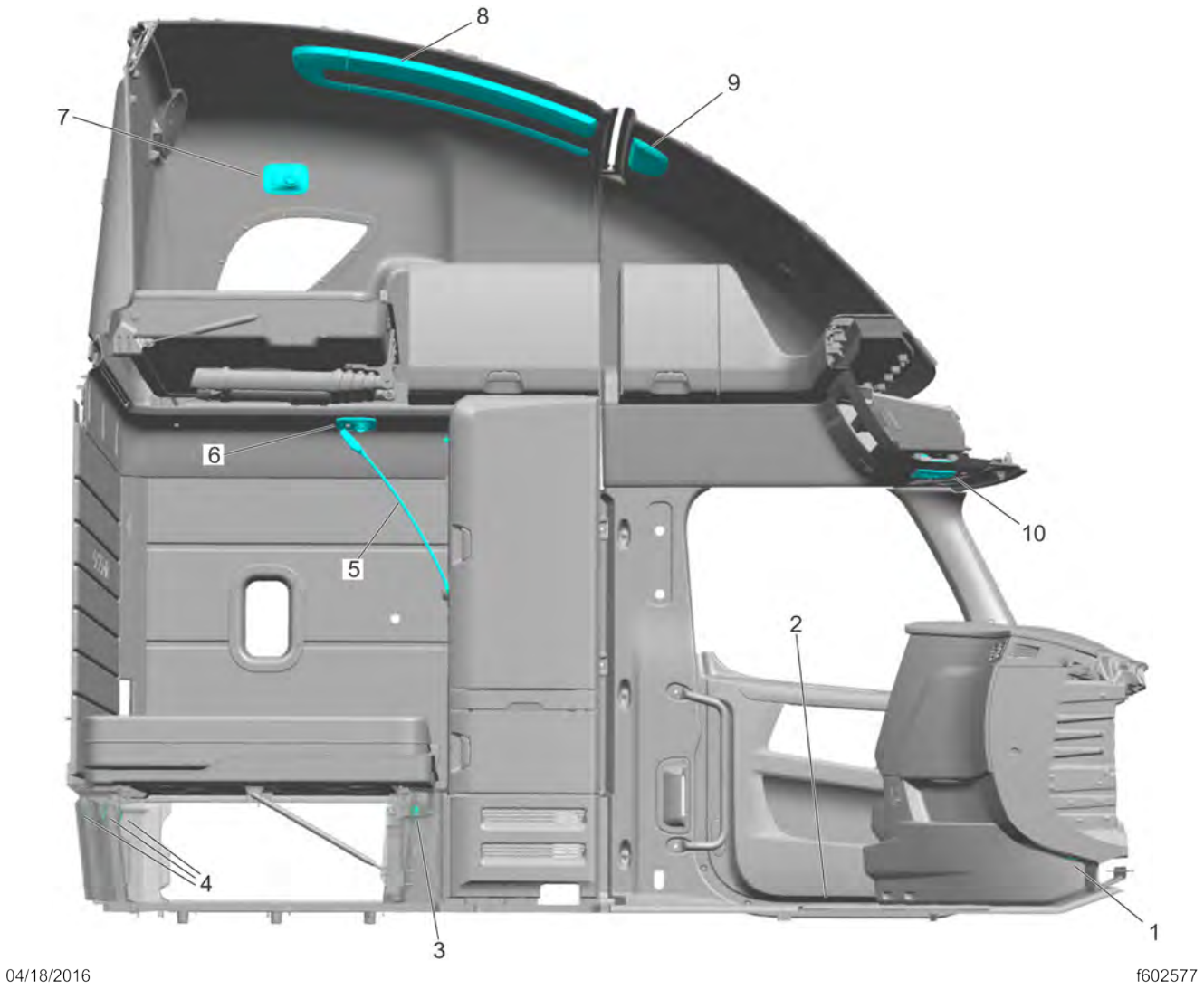

1. Foot Well Lights
2. Door Entry Courtesy Lights (now shown, on bottom of door)
3. Sleeper Floor Lights
4. Baggage Compartment Lights
5. Sleeper Task Light
6. Sleeper Reading Lamp (lower bunk)
7. Sleeper Reading Lamp (upper bunk)
8. Sleeper Dome Light
9. Cab Dome Lights
10. Overhead Console Lights

Fig 101, Example of Cab and Sleeper Interior Lighting

Baggage Compartment Lights

Baggage compartment lights are located on both sides of the underside of the lower bunk. See item 4, See Fig. 101,Example of Cab and Sleeper Interior Lighting. The lights come on when the lower bunk is raised or when a baggage compartment door is opened.

Cab and Sleeper Dome Lights

Dome lights will activate when a door is opened, then stay on for a short time after both doors are closed.

If equipped, a dash-mounted switch or a switch in the sleeper panel can be used to control the respective dome lights. See Fig.102,Cab Dome Light Switch and Fig.103,Sleeper Dome Light Switch.

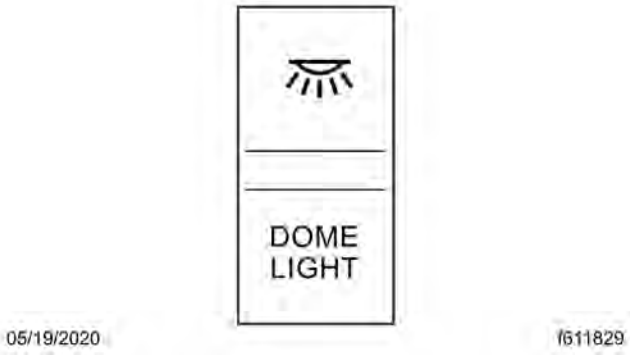

Fig 102, Cab Dome Light Switch

Fig 103, Sleeper Dome Light Switch

Dash Lights

Dash lighting brightness adjusts automatically based on ambient lighting.

The brightness can also be adjusted from the Dash Brightness screen in the driver display Settings menu, or by an optional dash light switch (see Fig.104,Dash Light Switch).

Fig 104, Dash Light Switch

Dash panel lights will brighten and dim in 10% increments no matter what control is used. If using the dash-mounted switch, toggle upward on the switch tab to increase the lighting and downward to decrease it.

When dash panel lights turn ON, they initially default to the intensity that was last set.

Door Entry Courtesy Lights

Each door contains a door entry courtesy light on the bottom front of the map pocket. When a door is opened, the door entry courtesy light illuminates.

Foot Well Lights

When either the driver or passenger doors are opened, the amber lights that illuminate each foot well illuminate. The foot well lights can also be activated with the foot well light switch. See Fig.105,Foot Well Light Switch.

Fig 105, Foot Well Light Switch

Overhead Console Lights

The overhead console light consists of a two reading lights that illuminate the forward cab and dash.

The overhead console lights illuminate when a door opens, then stay on for a short time after both doors are closed. They can also be turned ON and OFF by pressing directly on the lights.

Sleeper Floor Lights

The sleeper foot well switch activates two lights in front of the lower bunk that illuminate the sleeper floor. See item 3, See Fig.101,Example of Cab and Sleeper Interior Lighting.

Sleeper Reading Lights

Reading lights are mounted above bunks in the sleeper. Lights can be turned ON or OFF by pressing on the lights themselves or pressing on the switch incorporated into the light panel.

Theater Lighting Feature

Some vehicles come pre-set with theater lighting. Theater lighting gradually illuminates the overhead and reading lights when they are turned on and a gradually dims these lights when they are turned off.

5.03 Horn Controls

Air Horn

Air horn(s) may be mounted on the roof of day cabs, or under the driver-side floor for sleeper cabs. The air horn is controlled by a wire lanyard that hangs down inboard by the driver’s door. See Fig. 106,Air Horn Control. Pull downward on the lanyard to sound the air horn.

1. Lanyard

Fig 106, Air Horn Control

Electric Horn

The electric horn is activated by pressing down on the top of the steering wheel center pad.

The horn will sound for the duration that the button is pressed, up to 60 seconds. The electric horn will operate regardless of the position of the ignition key.

5.04 Powertrain Controls

5.04.01 Aftertreatment System Regen Switches

IMPORTANT: Depending upon local jurisdictional emissions guidelines, vehicles that are domiciled outside of the U.S. and Canada may not have engines and/or emissions aftertreatment systems that are compliant with EPA10 or GHG21 regulations.

NOTE: See 13.01 Greenhouse Gas Emissions and Fuel Consumption Standards for detailed information about the operation of the regeneration (regen) switches and the aftertreatment system (ATS).

Regen may be started manually with the optional digital switch in the ICU. See Fig. 107,Regen Start Digital Switch.

Fig 107, Regen Start Digital Switch

Some vehicles may be equipped with a regen inhibit switch. See Fig. 108,Regen Inhibit Switch. To stop a regen in progress or prevent the start of a regen, toggle the switch upward.

Fig 108, Regen Inhibit Switch

5.04.02 Axle Switches

Some vehicles are equipped with an interaxle differential lock switch, shown in Fig. 109,Interaxle Lock Switches, and/or a switch for a driver-controlled differential lock (DCDL). See Fig. 110,Example Differential Lock Switches. Pressing the toggle switch up engages the lock; pressing the toggle switch down unlocks it. For more information about differential locks and using them for traction control, see .

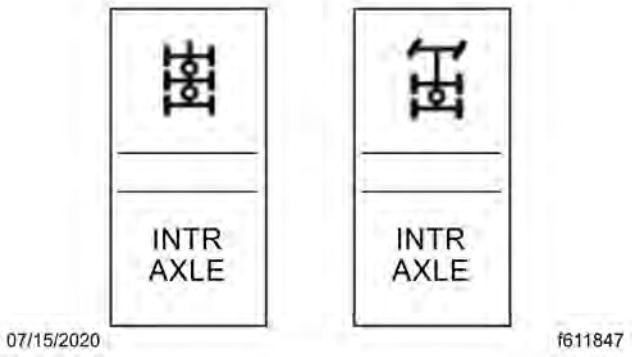

Fig 109, Interaxle Lock Switches

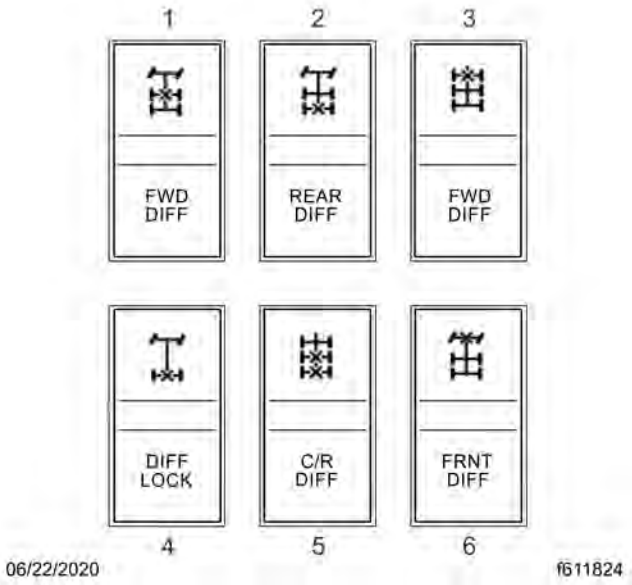

1. Forward Drive Axle Differential Lock Switch
2. Rear Drive Axle Differential Lock Switch
3. Forward Drive Axle Differential Lock Switch
4. Differential Lock Switch, 4X2
5. Center and Rear Differential Lock Switch
6. Front Differential Lock Switch

Fig 110, Example Differential Lock Switches

5.04.03 Engine Brake Switches

When vehicle braking is required on good road conditions, the engine brake may be used in conjunction with the service brakes. There is no time limit for operation of the engine brake. However, an engine brake does not provide the precise control of, and is not a substitute for, service brakes.

The engine brake control is located on the right-hand steering-column-mounted lever. At the top position, the engine brake is off, and at the three lower positions, the brake is on and the intensity (low, medium, high) increases with each step down. See Fig. 111,Engine Brake Positions.

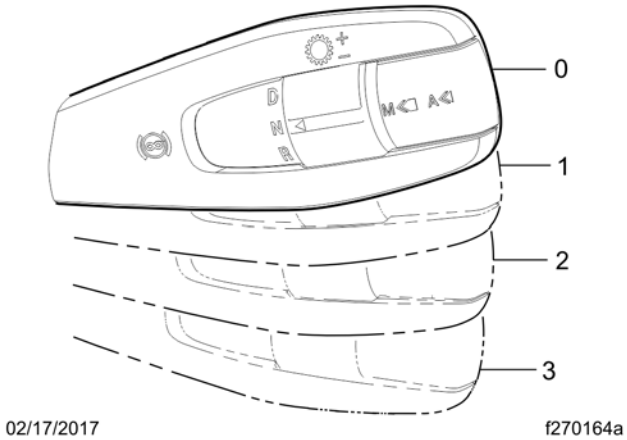

1. Off
2. Low
3. Medium
4. High

Fig 111, Engine Brake Positions

NOTE: The cruise control system and safety systems may activate the engine brake regardless of the lever position.

See for detailed information about engine brake operation.

5.04.04 Engine Fan Switch

The engine cooling fan can be turned on by toggling the engine fan switch up. The icon on the switch will illuminate in green when the fan is active. The fan will continue to operate for a set amount of time and then turn off unless the coolant temperature is high enough to trigger continued fan operation. To turn the fan off before the set time period ends, toggle the switch down. See Fig. 112,Engine Fan Switch.

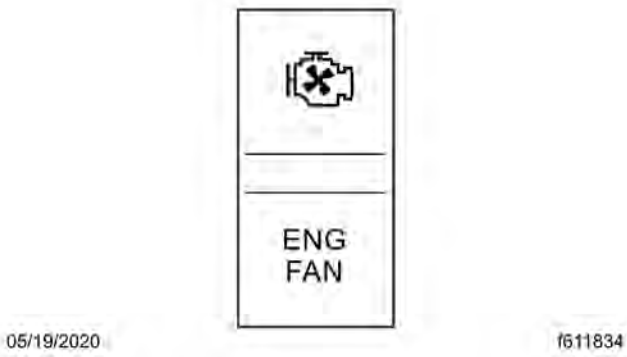

Fig 112, Engine Fan Switch

5.04.05 Hill Start Aid Override Switch

Some vehicles are equipped with a hill start aid (HSA) feature to prevent the vehicle from rolling while on steep grades and to allow for a controlled launch.

HSA is automatically active in the following conditions:

- the vehicle is in forward gear and facing uphill on an incline greater than one percent
- the vehicle is in reverse mode and facing downhill on an incline greater than one percent.

HSA delays the release of the service brakes for a maximum of three seconds until enough torque is available to begin moving the vehicle forward.

HSA can be turned off by toggling up the HSA override switch, shown in Fig. 113,Hill Start Aid Override Switch.

Fig 113, Hill Start Aid Override Switch

5.04.06 Power Take-Off (PTO) Switch

WARNING:

To avoid injury, do not install a PTO that is not Detroit Diesel approved onto a Detroit™ Transmission. Use of a non-Detroit Diesel approved PTO with a Detroit Transmission could result in unintended operation which could lead to severe personal injury.

To activate the PTO function, toggle the switch upward. The switch will illuminate red when PTO is active. Toggle the switch downward to deactivate the PTO function. See Fig. 114,PTO Switch.

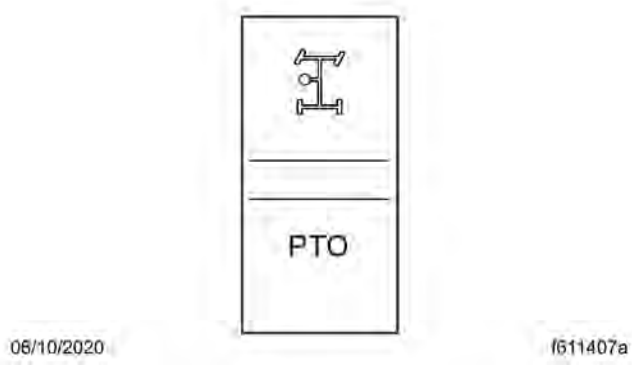

Fig 114, PTO Switch

5.04.07 Transmission Controls

Detroit™ Automated Transmissions

Vehicles with automated and automatic transmissions use the multifunction control shown in Fig. 115,Automated/Automatic Transmission Multifunction Control. This control moves in two directions and has two switches. It is used to request manual shifts, change shift mode, set engine brake levels, and control specialty engine brake functions.

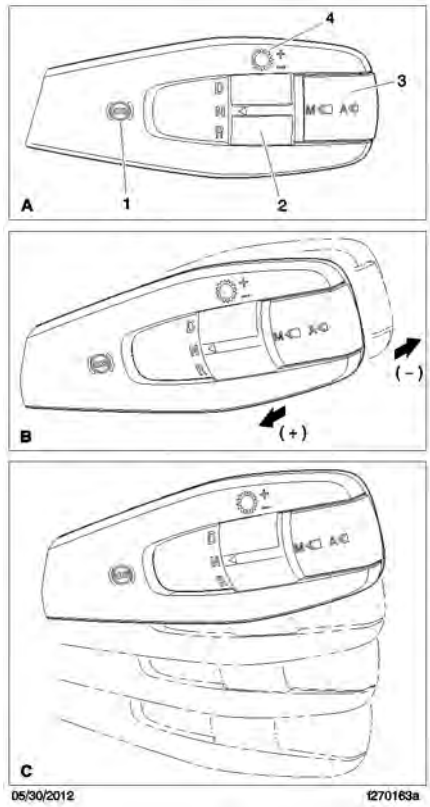

A. Front View
B. Shift Up/Down Requests
C. Four positions for engine brake settings
1. Engine Brake Symbol
2. Drive/Neutral/Reverse Switch
3. Shift Mode Switch (Economy/Performance/Manual)
4. Gear Shift Symbol

Fig 115, Automated/Automatic Transmission Multifunction Control

See 16.02.02 Mode Switch for full automated transmission operating instructions.

Manual Transmissions

If equipped, a transmission range control and splitter valves are attached to the gear shift knob.

The range-preselection lever allows the selection of the low or high range for each transmission ratio. It is used once during an upshift sequence and once during a downshift sequence.

Dependent on the transmission model, some ratios can be split using the splitter-control button.

See 17.01.02 Transmission Operation Tips for full manual transmission operating instructions.

5.05 Dash-Mounted Brake Controls

NOTE: See for detailed information about brake systems.

Parking Brake Control Valve

The yellow diamond-shaped knob on the dash operates the parking brake valve. See Fig. 116,Brake Valve Control Knobs. Pull the knob out to apply both the tractor and the trailer spring parking brakes.

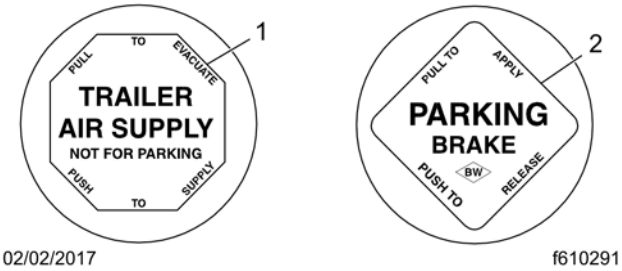

1. Trailer Air Supply Valve (red knob)
2. Parking Brake Control Valve (yellow knob)

Fig 116, Brake Valve Control Knobs

Push both the yellow parking brake and the red trailer air supply knobs in to release the tractor and trailer spring parking brakes. Before the spring parking brakes can be released, the air pressure in either air brake system must be at least 65 psi (447 kPa).

If the trailer is not equipped with spring parking brakes, pulling the yellow parking brake valve out applies the tractor parking brakes and the trailer service brakes.

Trailer Air Supply Valve

The red octagonal-shaped knob operates the trailer air supply valve, which charges the trailer air supply system and releases the trailer spring parking brakes. See Fig. 116,Brake Valve Control Knobs.

After the vehicle and its air hoses are connected to a trailer and the pressure in the air system is at least 65 psi (447 kPa), push the red trailer air supply valve knob in (and leave it in) to charge the trailer air supply system and release the trailer spring parking brakes.

Pull the red trailer air supply valve out before disconnecting a trailer or when operating a vehicle without a trailer.

Trailer Brake Lever

The trailer brake lever is used to apply the trailer service brakes without applying the truck or tractor service brakes. It is usually mounted on the right-hand control panel. See Fig. 117,Trailer Brake Lever. The valve can be partially or fully applied, but in any partially on position it will be overridden by a full application of the service brake pedal.

Move the lever down to apply the trailer brakes; move the lever up to release the trailer brakes. The lever will automatically return to the up position when it is released.

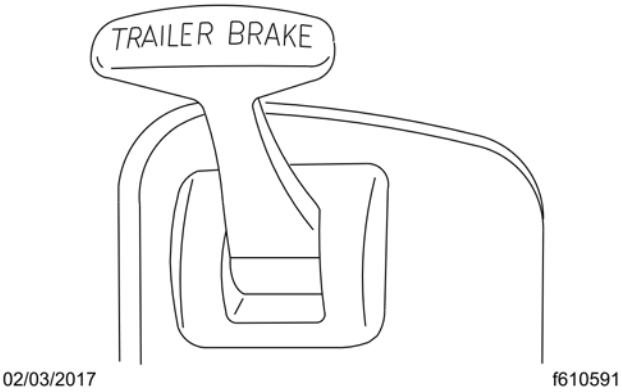

Fig 117, Trailer Brake Lever

Antilock Braking System

The Antilock Braking System (ABS) passively monitors vehicle wheel speed at all times and controls wheel speed during emergency stops or wheel lock situations.

During emergency or reduced-traction stops, fully depress the brake pedal until the vehicle comes to a safe stop. *Do not pump the brake pedal* . With the brake pedal fully depressed, the ABS will control all wheels to provide steering control and a reduced braking distance.

The ABS is designed to communicate with a trailer ABS, if they are compatible. Compatibility will result in the illumination of the trailer ABS lamp during vehicle start-up and fault detection. The trailer ABS lamp will not illuminate unless a compatible trailer is connected to the tractor.

Vehicles with ABS may have Automatic Traction Control (ATC). On these vehicles, the ATC system automatically limits wheel spin during reduced-traction situations. In normal braking applications, the standard air brake system is in effect.

Toggling the ATC SPIN switch up, shown in Fig. 118,ATC SPIN Switch, shuts the ATC off and allows drive wheel spin.

NOTICE:

The ATC spin feature is intended to be used under specific slippery conditions that require momentary increased wheel spin. Using this option for an extended period of time may damage the vehicle brake system.

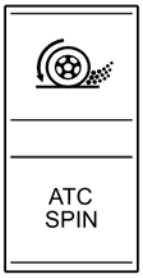

Fig 118, ATC SPIN Switch

Toggling the switch down, or cycling the ignition key, will cycle the system back to normal operation.

5.06 Windshield Wiper and Washer Controls

NOTICE:

Do not attempt to manually move the windshield wiper arms. Wiper motor damage will occur if the arms are forcibly moved.

The windshield wipers and washer controls are on the multi-function turn signal lever on the left-hand side of the steering column. See Fig. 119,Windshield Wiper/Washer Controls.

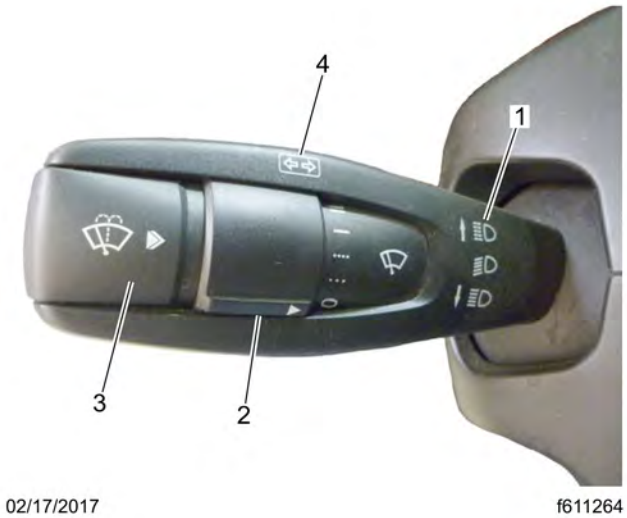

1. Headlight Control Symbols
2. Windshield Wiper Switch
3. Windshield Washer Switch
4. Turn Signal Symbol

Fig 119, Windshield Wiper/Washer Controls

Wiper Controls

The wipers are operated by a rotary switch on the turn signal lever. There are five settings: off, two intermittent settings, and two continuous speeds. Symbols mark each setting on the dial.

Turn the wipers on by rotating the rotary switch up. Rotate the switch further to increase the speed of the wipers through the two intermittent settings, then to continuous low and high speeds. Rotate the switch down to slow the wipers down. Rotate the switch as far down as it will go to turn the wipers off.

The default speeds for the two intermittent settings are 6 seconds and 1 second.

The first intermittent setting of 6 seconds is programmable from 1 to 25 seconds. To program the interval, rotate the switch from the first intermittent position to the OFF position, wait for the desired interval between wipes to lapse (between 1 and 25 seconds), and then move the switch back to the first intermittent position. If the switch is kept in the OFF position for more than 50 seconds, the interval changes back to the default of 6 seconds.

The second intermittent setting has an interval of 1 second and is not programmable.

NOTE: Some vehicles may have a feature that automatically turns on the headlights if the windshield wipers are on and the vehicle is moving faster than 10 mph (16 km/h). At speeds between 10 and 40 mph (16 to 64 km/h), cycling the headlight switch will turn the headlights off.

Wipers and the Rain/Light Sensor

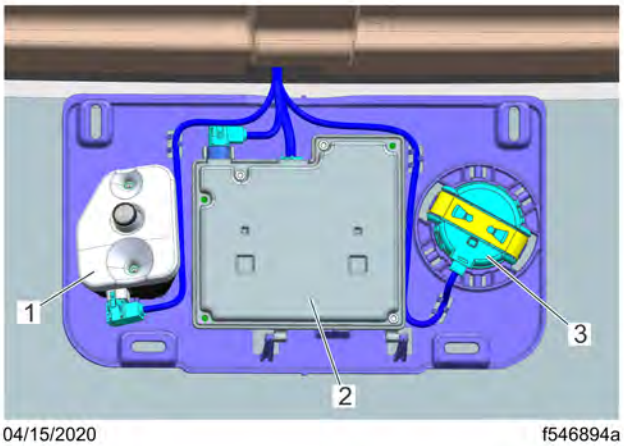

1. Driver Facing Camera
2. Multipurpose Camera 2 (MPC2)
3. Rain/Light Sensor

Fig 120, MPC2 Cameras and Rain/Light Sensor

If the vehicle is equipped with a rain/light sensor, shown in Fig. 120, MPC2 Cameras and Rain/Light Sensor, and the wiper switch is in set to an intermittent setting, the wipers will start when the sensor detects rain, snow, or other precipitation on the windshield.

If the vehicle is moving faster than 40 mph (64 km/h), the wiper speed will automatically increase and decrease, dependent upon how much moisture builds up on the windshield between wipes.

If the wiper switch is set to a continuous speed (low or high), input from the rain/light sensor is ignored.

The behavior of the wipers based on the rain/light sensor input is independent of the headlamp switch position.

NOTE: A vehicle equipped with automatic headlights and an A option on the headlight switch, shown in Fig. 120, MPC2 Cameras and Rain/Light Sensor, should be equipped with a rain/light sensor.

If a rain/light sensor is installed, the lens area of the camera will appear shiny when viewed through the windshield because of the silicone gel between the lens and the windshield. If no rain/light sensor is installed, the plastic plug placed in the bracket will appear as a flat black circle.

Windshield Washers

The windshield washer button is located at the end of the turn signal lever. Momentarily press the windshield washer button to initiate a single wipe without activating the washer pump. The wipers will swipe one full cycle and return to the inactive position.

To operate the windshield washers, press and hold the button in. After a short delay, the washer will pump windshield washer fluid onto the windshield for as long as the washer button is pressed. The windshield wipers will turn on at low speed while the washer button is pressed. After the button is released, the wipers will continue to operate for one to several wipe cycles, depending on how long the wash button was pressed initially.

5.07 Suspension Controls

5.07.01 Air Suspension Dump Switch

NOTICE:
Do not operate the vehicle over uneven ground such as ramps, speed bumps, curbs, etc. with the air springs deflated. Doing this may lead to air bag separation from the piston, preventing the suspension air springs from re-inflating.

If equipped, the air suspension dump switch can be used to adjust the vehicle height to aid in coupling or uncoupling from a trailer. See Fig. 121,Air Suspension Dump Switch.

Toggling the switch up deflates the air springs to lower the rear of the vehicle. The upper icon of the switch will illuminate red when active.

Toggling the switch up again will raise the rear of the vehicle to normal ride height.

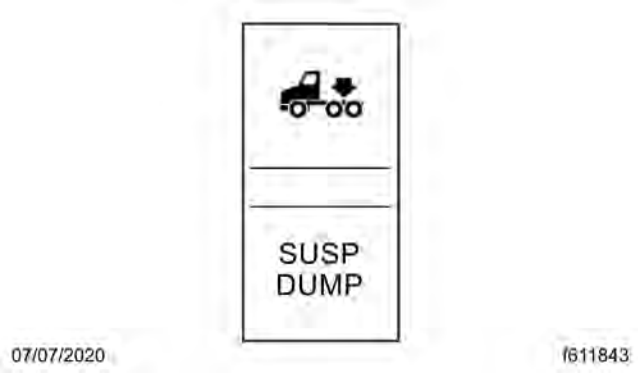

Fig 121, Air Suspension Dump Switch

NOTICE:
Never exhaust air from the suspension while driving. When the air is exhausted, the suspension will not absorb road shocks and components may be damaged.

5.07.02 Air Suspension Height Control Switch

If equipped, the air suspension height control dash switch can be used to adjust the vehicle height to aid in coupling or uncoupling from a trailer. The switch will illuminate red when active.

If the suspension is at normal height:

- each up press on the dash switch, shown in Fig. 122,Air Suspension Height Control Switch, increases the suspension height an increment, unless the suspension is at maximum height
- a down press lowers the suspension to its lowest set-point (usually axle stops)

If the suspension is *below* normal height:

- an up press increases the suspension height to normal ride height

- a down press does nothing; the suspension is already at its lowest point

If the suspension is *above* normal height:

- each up press increases the suspension height an increment, unless the suspension is at maximum height
- a down press lowers the suspension to normal ride height

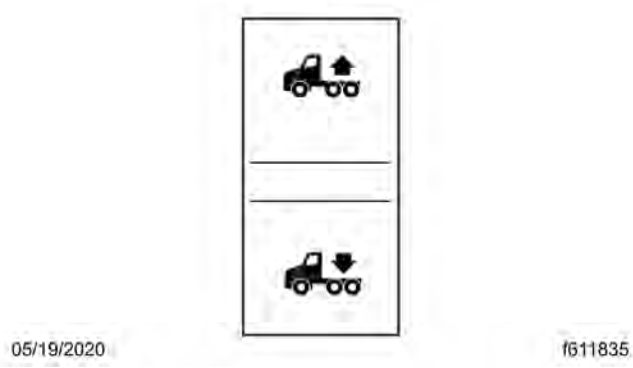

Fig 122, Air Suspension Height Control Switch

Suspension Height Messaging

On vehicles equipped with the ICU, messages about above or below normal ride height will display in the message field of the driver display. See Fig. 123, Example of Ride Height Message, ICUC.

Fig 123, Example of Ride Height Message, ICUC

5.08 Trailer Controls

Fifth Wheel Slide Control Switch

NOTICE:

Do not activate the fifth wheel slide control valve while the vehicle is in motion. To do so could cause damage to the fifth wheel member, the kingpin, the cab or trailer, and ultimately to the drivetrain.

The fifth wheel air slide switch permits repositioning of the sliding fifth wheel from inside the cab. See Fig. 124,Fifth Wheel Slide Control Switch. Toggling the switch up activates the control valve and unlocks the fifth wheel slide

mechanism, allowing changes to the total length of the tractor-trailer and changes to axle loads to comply with varying jurisdictional laws. Toggling the switch down deactivates the control valve and locks the fifth wheel to the baseplate.

Fig 124, Fifth Wheel Slide Control Switch

For detailed operating instructions for fifth wheel slide, coupling, and uncoupling procedures, see .

Trailer Auxiliary Switch

The trailer auxiliary switch energizes an optional circuit that allows the trailer electrical system to draw power for functions such as internal lights and battery charging for lift gates.

Toggle up on the switch to activate the trailer auxiliary function. The switch will illuminate green when active. Toggle down to turn trailer auxiliary function off. See Fig. 125,Trailer Auxiliary Switch.

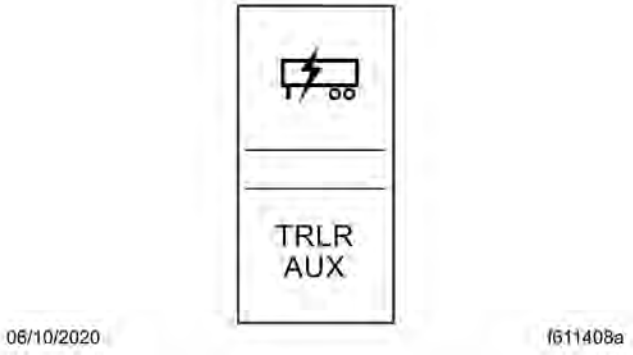

Fig 125, Trailer Auxiliary Switch

5.09 Adjustable Steering Column Controls

To unlock the steering column to adjust it, pull the steering column locking lever out and away from the column. See Fig. 126,Unlocking the Steering Column. With the column unlocked, the steering wheel can be adjusted up-and-down and tilted fore-and-aft. Once the wheel is in the desired position, lock the position by pushing the lever in toward the column until it goes no further and is parallel to the column itself.

WARNING:
Make sure that the steering column is locked before driving the vehicle. Never attempt to adjust the column while driving the vehicle. Doing so could cause loss of vehicle control, personal injury, and property damage.

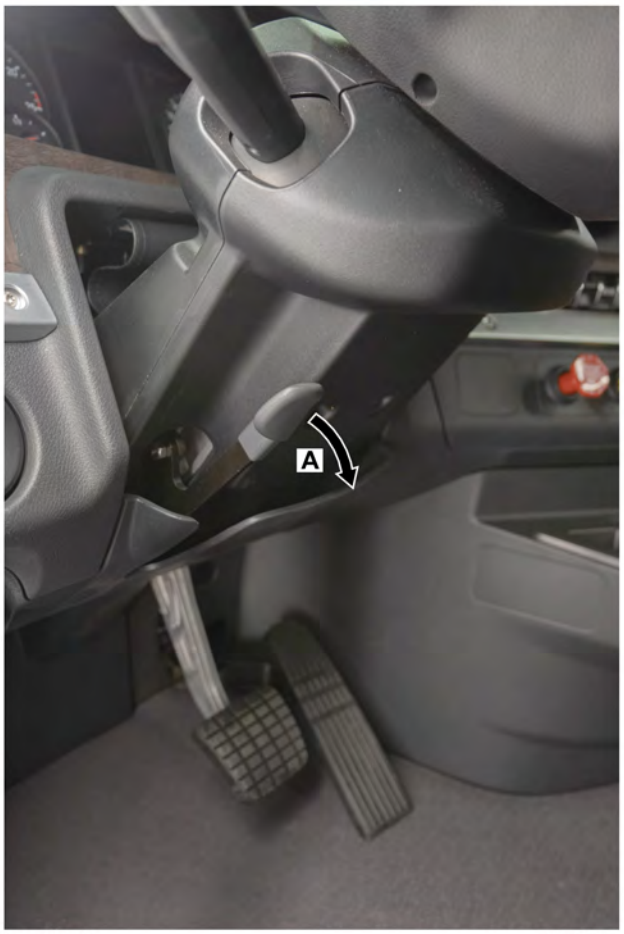

08/17/2022 f462301b

A. Pull the steering column locking lever out and away from the column.

Fig 126, Unlocking the Steering Column

5.10 Climate Controls

5.10.01 Mirror, Windshield, and Headlight Heat Controls

NOTE: See 9.01 Windows for details on the mirror and windshield heat features. See for details on the light emitting diode (LED) headlight heated lens system.

The outside door mirrors and, if equipped, hood-mounted auxiliary mirrors, can be heated to keep them clear of fog, frost, and ice.

If equipped with a heated windshield, toggling the windshield heat switch will activate the heating if the ambient air temperature is at or below 28°F (-2°C).

If the temperature is below 68°F (20°C), the heated headlight lens system will activate when either the mirror heat or windshield heat switch is turned on.

5.10.02 Cab Climate Control

NOTE: See 7.01.01 General Information for detailed climate control panel operating instructions.

The cab climate control panel has three switches to control the functions of the cab temperature system: ventilation, heating and cooling, air conditioning and dehumidifying, and defrosting for the windshield. See Fig. 127,Cab Climate Controls.

- fan switch with recirculation button
- temperature control switch with A/C button
- mode control switch (with bunk-override button on sleeper cab only)

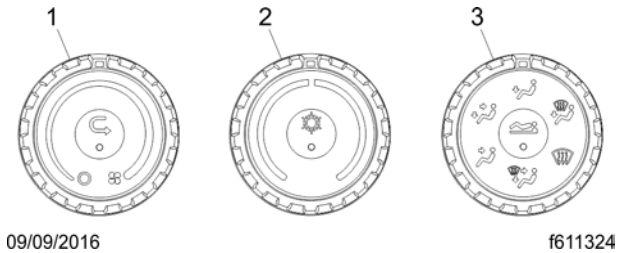

1. Fan Switch
2. Temperature Control Switch
3. Mode Control Switch

Fig 127, Cab Climate Controls

The fan switch controls the fan speed, and forces fresh or recirculated air through the air outlets. To increase airflow, turn the switch clockwise to a higher number. To decrease airflow, turn the switch counterclockwise to a lower number.

Recirculation mode limits the amount of outside air that enters the cab. Press the recirculation button to prevent dusty or smoky air from entering the cab.

NOTE: To prevent the buildup of odors and/or oxygen depletion inside the cab, the system switches from full recirculation mode to partial recirculation mode after 20 minutes.

The temperature control switch is used to select the desired temperature. Turn the switch clockwise to the red area for warm air. Turn the switch counterclockwise to the blue area for cool air.

The A/C cools and dehumidifies the air inside the cab. Press the A/C button, located in the center of the temperature control switch, to turn the A/C on and off.

The mode control switch allows the control of air flow through the face outlets, the floor outlets, the defrost (windshield) outlets, or a combination. See Fig. 128,Mode Control Switch With Bunk Override Button.

There are intermediate modes between each switch position.

1. Face Mode
2. Bi-Level Mode
3. Floor Mode
4. Floor/Defrost Mode
5. Defrost Mode
6. All Mode
7. Bunk Override Button (on sleeper-cabs only)

Fig 128, Mode Control Switch With Bunk Override Button

There are intermediate modes between each switch position.

Bunk-Override Button

In sleeper-cabs, the bunk-override button is located in the center of the cab air-selection switch. See Fig. 128,Mode Control Switch With Bunk Override Button. The bunk override button allows the driver to control the sleeper temperature and fan settings from the cab.

Press the bunk override button to copy the current cab HVAC temperature and fan settings to the sleeper HVAC. An amber indicator will illuminate when bunk override mode is activated. When in override mode, the sleeper climate control panel automatically conforms to the fan speed and temperature settings on the cab climate panel at the time the override mode is activated. Further changes of the cab climate control settings will not alter the settings of the sleeper climate control panel.

The override mode is disabled when the fan switch or temperature control switch on the sleeper climate control panel is manually set to a different setting.

Press the bunk override button a second time to turn the override function off.

5.10.03 Sleeper Climate Control

The sleeper temperature can be set using the cab climate control panel by pressing the bunk-override button.

To cancel the bunk-override mode, either press the bunk-override button again or change the sleeper fan speed or temperature setting on the sleeper climate control panel. The system will then operate from the sleeper controls. See Fig. 129,Sleeper Climate Control Panel.

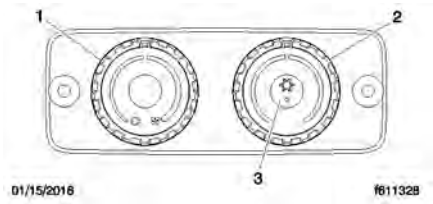

1. Fan Switch
2. Temperature Control Switch
3. Air Conditioning Button

Fig 129, Sleeper Climate Control Panel

On the sleeper climate control panel, turn the temperature control switch clockwise to the red area for warm air and counterclockwise to the blue area for cool air. Press the button in the center of the temperature control switch to activate the A/C.

The sleeper climate control panel fan switch controls the sleeper temperature fan speed. To increase airflow, turn the switch clockwise to a higher number. To decrease the airflow, turn the switch counterclockwise to a lower number.

5.11 Seat Controls

NOTE: See 8.01 Seats, General Information for detailed information about seat controls and adjustments.

WARNING:

Keep hands, tools, and other objects away from the scissor points under the seats. Failure to do so could cause personal injury.

The following is a description of adjustments that can be made to various Western Star seats. Not all seats have all of the adjustments listed below. See Fig. 130,General Seat Adjustments.

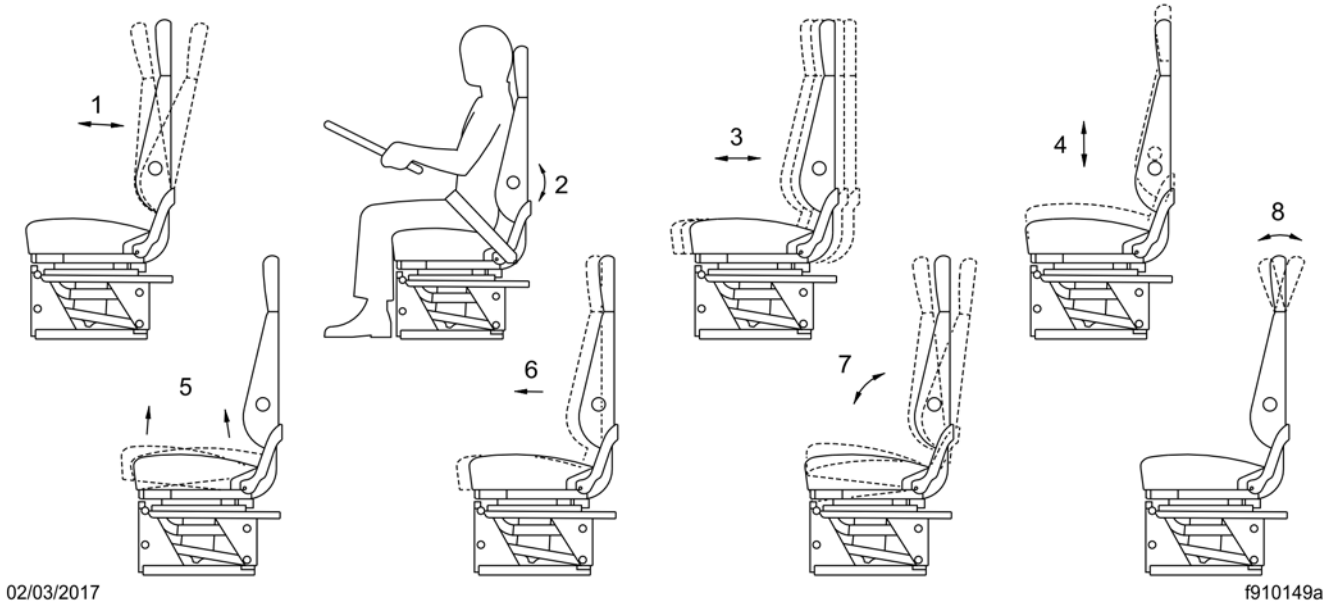

1. Backrest Tilt
2. Lumbar Support
3. Isolator Feature
4. Height Adjustment
5. Bottom Cushion Angle (fore-and-aft cushion height)
6. Fore-and-Aft Seat Slide (seat track adjustment)
7. Seat Tilt
8. Headrest Adjustment

Fig 130, General Seat Adjustments

1. Backrest Tilt: This adjustment enables the backrest to pivot forward or backward.
2. Lumbar Support: Lumbar support changes the shape of the seat back to give more or less support to the occupant's lumbar (lower back) area. This adjustment is either mechanical or air controlled, depending on make and model of the seat.

3. Isolator: This feature reduces the amount of road shock by isolating the occupant from the motion of the vehicle, and allowing the upper seat to move in a simple pendulum motion. A lockout feature is used whenever the isolator is not desired.
4. Height Adjustment: This adjustment moves the entire seat up or down. The adjustment is either manually- or air-controlled, depending on the make of the seat.
5. Bottom Cushion Angle, or Fore-and-Aft Bottom Cushion Height: This adjustment enables the occupant to raise or lower the front or back of the bottom cushion. This adjustment is easier to perform when all weight is removed from the seat.
6. Fore-and-Aft Seat Slide, or Seat Track Adjustment: This adjustment moves the entire seat forward or backward on its track.
7. Seat Tilt: This adjustment allows the seat assembly (back and bottom cushions) to tilt forward or backward.
8. Headrest Adjustment: This adjustment changes the angle of the upper part of the backrest to provide head and upper back support.
9. Armrest Adjustment (not pictured): This adjustment changes the height and angle of the arm rests.

6.01 Detroit Assurance 5.0 Collision Mitigation System (CMS) 137
6.01.01 General Information 137
6.01.02 Adaptive Cruise Control (ACC) 137
6.01.03 Tailgate Warning 141
6.01.04 Active Brake Assist 5 (ABA5) 141
6.02 Detroit Assurance 5.0 Vehicle Camera 147
6.02.01 Partial Obstruction Notice 147
6.02.02 Multipurpose Camera 2 (MPC2) 147
6.02.03 Driver Facing Camera 148
6.02.04 Rain/Light Sensor 148
6.03 Detroit Assurance 5.0 Lane Departure Warning (LDW) 148
6.03.01 Safety Notes on Lane Departure Warning (LDW) 148
6.03.02 Overview 149
6.03.03 Functions and Activation Conditions for Lane Departure Warning (LDW) 149
6.03.04 Activating or Deactivating Lane Departure Warning (LDW) 149
6.03.05 Cleaning the Windshield 150
6.04 Detroit Assurance Active Lane Assist (ALA) 150
6.05 Detroit Assurance Attention Assist 157
6.06 Detroit Assurance Side Guard Assist (SGA) and Active Side Guard Assist (ASGA) 159
6.06.01 General Information 159
6.06.02 Safety Information 161
6.06.03 Sensor Monitoring Range of SGA 162
6.06.04 SGA Telltales 162
6.06.05 Activating and Deactivating Side Guard Assist 164
6.06.06 Driving Scenarios and SGA Warnings 167
6.07 Detroit Assurance Traffic Sign Display 169
6.07.01 General Information 169
6.07.02 Safety Information 169
6.07.03 Traffic Sign Display Functionality 170
6.07.04 Activating or Deactivating 171
6.08 Standard Cruise Control 172

6.08.01 Standard Cruise Control 172
6.08.02 PasSmart 174
6.08.03 Intelligent Powertrain Management (IPM) 174
6.08.04 Cruise Descent Control and Deceleration Modes, Detroit™ Engines 176
6.09 Hill Start Aid 178
6.10 Hold Function 179
6.11 Enhanced Stability Control (ESC) 180
6.12 OnGuardACTIVE™ Collision Mitigation System 181
6.12.01 General Information 181
6.12.02 System Limitations 182
6.12.03 OnGuard Display Unit 182
6.12.04 Collision Warning System (CWS) 183
6.12.05 Adaptive Cruise Control (ACC) 185
6.12.06 Error Screens 186
6.12.07 Additional Features 186
6.13 SafetyDirect® by Bendix 188
6.13.01 General Information 188
6.13.02 Bendix Forward Facing Camera 188
6.13.03 The Bendix SafetyDirect Portal 188
6.14 Lytx SF500 DriveCam System 189
6.14.01 Driver Facing Camera 189
6.15 Off-Road Mode 190

6. Driver Assistance Features

6.01 Detroit Assurance 5.0 Collision Mitigation System (CMS)

6.01.01 General Information

The Detroit Assurance 5.0 Collision Mitigation System is an active driver safety system that uses radar mounted on the front frame crossmember, shown in Fig.131,Forward Radar Location, and a windshield-mounted multipurpose camera to communicate information to the vehicles' brakes, engine, and transmission.

The system can track vehicles up to 820 feet (250 meters) ahead, and if necessary, will sound a warning and apply the brakes.

Fig 131, Forward Radar Location

IMPORTANT: Do not mount any attachments in front of the radar distance sensor. Do not paint or affix items over the distance sensor cover. If attachments are mounted in front of the distance sensor, such as a crash guard, they can impair the operation of the distance sensor.

6.01.02 Adaptive Cruise Control (ACC)

WARNING:

The Detroit Assurance Collision Mitigation System is intended solely as an aid for an alert and conscientious professional driver. It is not intended to be relied upon to operate a vehicle. Use the system in conjunction with rearview mirrors and other instruments to safely operate the vehicle.

The Detroit Assurance Collision Mitigation System is not a substitute for safe, normal driving procedures, nor will it compensate for any driver impairment such as drugs, alcohol, or fatigue.

Failure to drive safely and use the system properly could result in personal injury and/or death and severe property damage.

Adaptive Cruise Control Safety Information

NOTE: In vehicles equipped with a D12 transmission, this feature is called adaptive cruise control (ACC) to 0mph. In instances where the feature capabilities are different, this will be called out. Otherwise the feature will be called ACC.

ACC may not detect vehicles driving in a different lane or narrow vehicles, like motorcycles, driving in front.

In particular, stay aware in the following situations:

- when cornering, entering, and exiting bends;
- when driving winding stretches of road;
- when overtaking;
- when there are vehicles driving in a different lane;
- when vehicles are changing lanes;
- when vehicles are exiting the road;
- when there are obstacles and stationary vehicles.

ACC does not compensate for inattentive driving, weather, or traffic conditions. The ACC is only an aid. The driver is responsible for maintaining a safe distance from the vehicle in front, maintaining a safe vehicle speed, braking, and remaining in a lane.

If ACC does not detect a vehicle driving in front, the system will accelerate to the set speed.

Overview

See Table 22,Steering Wheel Controls and see Fig. 132,Steering-Wheel-Mounted Right-Hand Switch Pod - ICUC for a description of cruise control steering wheel switches.

Table 22, Steering Wheel Controls

Description	Function
–/SET	Sets the cruise speed while the vehicle is traveling at the desired speed. Pressing and holding decreases the set cruise speed.
+/RES	Resumes the set speed. Pressing and holding increases the set cruise speed.
CNCL	Deactivates cruise control, but retains the set speed in memory.

Table 22, Steering Wheel Controls

1. Cruise Accelerate/Resume
2. Quick Access System Settings
3. Cruise Decelerate/Set
4. Phone Hang-Up/Reject
5. Marker Interrupt**
6. Phone Pick-Up
7. Headlamp Interrupt**
8. Cancel Cruise Control
9. **Not available in all markets

Fig 132, Steering-Wheel-Mounted Right-Hand Switch Pod - ICUC

Fig. 5.3, Steering-Wheel-Mounted Right-Hand Switch Pod - ICUC

When a vehicle in front is detected, the driver display shows the speed of the detected vehicle and the distance and time to the detected vehicle. See Fig. 133,Adaptive Cruise Control (ACC) Screen - ICUC.

Fig 133, Adaptive Cruise Control (ACC) Screen - ICUC

Functions and Activation Conditions

ACC controls speed and the distance from a vehicle detected in front.

If there is no vehicle in front, ACC operates in the same way as cruise control when the vehicle is traveling above 10 mph (15 km/h).

If ACC detects a vehicle in front driving at a slower speed, the engine is defueled, the engine brakes are activated, and the service brakes are applied, slowing the vehicle to maintain the set following distance. The standard factory set following distance is 3.6 seconds; for vehicles configured with adjustable headway, this can be adjusted under the Cruise Control menu under Vehicle Settings.

In vehicles equipped with a D12 transmission, ACC to 0mph allows the vehicle to operate in cruise all the way down to 0 mph (0km/h). As traffic in front of the vehicle slows and eventually stops, the vehicle will adjust with the traffic.

If the vehicle ahead causes the truck to be stopped for two seconds or less, ACC to 0mph will resume when the vehicle ahead moves. If the vehicle ahead is stopped for more than two seconds, the driver—after carefully checking surrounding traffic—will need to press the resume button or tap the accelerator pedal to resume moving forward.

The ACC will also slow the vehicle if it exceeds the set speed (on a downhill grade, for example).

When a slower vehicle in front is no longer detected, the ACC will accelerate the vehicle to the set speed.

IMPORTANT: IMPORTANT: Nothing should be put between the driver and the seat, such as a heating pad, massage pad, or similar items. Doing so may keep the seat occupancy sensor from functioning correctly.

ACC cannot be activated, or is automatically deactivated, if:

- the driver is not in their seat to activate the seat occupancy sensor;

- the vehicle is traveling slower than 10 mph (15 km/h);
- the transmission is in neutral for more than 5 seconds;
- reverse gear is selected;
- the anti-lock braking system (ABS) is deactivated;
- there is a malfunction in the brake system or the electronic management system; or
- the distance sensor initialization is not yet complete.

Activating Adaptive Cruise Control and Setting the Speed

Activate ACC by setting the cruise speed, using the controls on the steering wheel. See Table 22,Steering Wheel Controls.

When driving at the desired speed, press the –/SET switch on the steering wheel switch pod. ACC will be activated and the set speed stored.

If cruise control is deactivated, the stored speed can be activated again by pressing the +/RES switch on the steering wheel switch pod. When activated, the driver display will show the ACC symbol and the set speed. ACC will automatically brake or accelerate the vehicle to maintain the set speed.

If the brake pedal is pressed, ACC is deactivated automatically.

If ACC becomes unavailable in vehicles equipped with Detroit Assurance 5.0, a pop-up message will inform the driver. If the vehicle is programmed to allow for standard cruise control, a message will be displayed that allows the driver to choose to use standard cruise control. See Fig. 134,Adaptive Cruise Control (ACC) Unavailable - ICUC.

Fig 134, Adaptive Cruise Control (ACC) Unavailable - ICUC

Increasing or Reducing Adaptive Cruise Control Speed

The ACC speed setting can only be set when driving.

Press the –/SET switch on the steering wheel switch pod to set the cruise speed when the vehicle is traveling at the desired speed. To decrease the set cruise speed, press and hold –/SET.

Setting the Adaptive Cruise Control Distance to the Vehicle in Front

The ACC settings menu under Vehicle Settings can be used to set the overspeed and underspeed limits and the distance to the vehicle in front. Adjust the specified minimum distance to the vehicle in front if necessary.

IMPORTANT: IMPORTANT: Make sure that the minimum distance required by law is maintained.

Overtaking When Using Adaptive Cruise Control

NOTE: It is possible to exceed the set speed when overtaking.

The set speed of ACC can be exceeded using the accelerator pedal. When the accelerator pedal is released, the ACC set speed will be resumed.

Deactivating Adaptive Cruise Control

To deactivate ACC, press the CNCL switch on the steering wheel switch pod or press the brake pedal.

NOTE: The set speed remains stored when ACC is deactivated.

6.01.03 Tailgate Warning

Tailgate Warning provides alerts when the vehicle in front is being followed too closely. The system gives warning when:

- ACC is not active; and
- the vehicle is moving faster than 20 mph (32 km/h); and
- the driver follows a vehicle for longer than 10 seconds at a distance that will be traversed in less than 2.6 seconds.

The system will not give warning when:

- the vehicle is moving slower than 20 mph (32 km/h);
- another vehicle cuts in front;
- the vehicle in front is moving away; or
- ACC is activated.

The system will continue to give warning every 20 seconds if the gap between the vehicles does not increase.

6.01.04 Active Brake Assist 5 (ABA5)

Active Brake Assist 5 (ABA5)

Overview

IMPORTANT: The windshield must be clean, unobstructed, and without damage for proper operation of the multipurpose camera. No objects or attachments should be mounted in front of the forward radar and the radar covering should be free of paint, stickers, mud, ice, or snow.

ABA is active when the vehicle is on.

ABA5 uses fused camera and radar signals for improved object recognition, enabling it, in some cases, to recognize potential hazardous situations faster than a driver. If the camera system becomes temporarily disabled, radar signals alone are used.

Active Brake Assist 5 tracks both moving and stationary objects in the vehicle's path and engages in a cascade of actions. ABA5 has the capacity to engage full braking on slower moving vehicles, moving pedestrians, parked vehicles, and stopped traffic as follows:

1. visual and auditory warnings;
2. then partial braking;
3. then full or emergency braking.

ABA5 has the capacity to engage full braking on slower moving vehicles, moving pedestrians, parked vehicles, and stopped traffic. The system may not detect pedestrians or objects in every situation, nor is it a substitute for cautious driving.

Safety Information

WARNING:

Active Brake Assist 5 (ABA5) is intended only as an aid for a conscientious and alert driver. The driver is responsible for keeping a safe distance from the vehicle in front, for the vehicle speed, braking in good time, and remaining in lane.

ABA5 does not take road and weather conditions into account, nor the prevailing traffic situation. The driver should always adapt driving style to suit prevailing road and weather conditions.

ABA5 is not a substitute for safe driving procedures.

Operate a vehicle equipped with Detroit Assurance Collision Mitigation System as if the vehicle were not equipped with a collision mitigation system.

The Detroit Assurance Collision Mitigation System will not warn of hazards such as animals, oncoming vehicles, or cross traffic.

Failure to drive safely and use the system properly could result in personal injury and/or death and severe property damage.

If your vehicle is equipped with ABA5 it can:

- react more quickly than a driver to an object in the vehicle's path of travel;
- perform emergency braking; and
- react to moving people with a warning and partial and full braking.

Detroit Assurance ABA5 can minimize the risk of a front-end collision with a moving or stationary vehicle and pedestrians. If ABA5 detects the risk of a front-end collision, it issues an audible and visual warning. If the risk persists, ABA5 automatically initiates partial braking of the vehicle. If the driver does not react to the warnings and partial brake application, ABA5 automatically initiates a full brake application.

ABA5 may also detect people who are moving along the edge of the lane.

ABA5 may not detect vehicles driving in a different lane or narrow vehicles, like motorcycles, driving in front of the vehicle.

Brake the vehicle using the service brake if:

- an event window with the warning symbol appears on the driver display screen;
- an intermittent warning tone sounds; or
- an intermittent warning tone sounds and automatic partial braking is initiated.

ABA5 does not automatically adapt to road and traffic conditions. If no visual and/or acoustic warning is issued in a critical situation:

- ABA5 has not recognized the danger of the situation;
- ABA5 is suppressed; or
- ABA5 has failed.

Activating and Deactivating Active Brake Assist

Models made January 2023 and after are equipped with an ABA OFF physical switch option, to support specific operations where an ABA false positive may occur, or conditions where the ABA activation is not required. See Fig. 135,ABA OFF Switch.

Fig 135, ABA OFF Switch

When the ABA function is turned off by the driver the physical switch LED logo illuminates in red, and the ICUC presents a popup warning to the driver showing the ABA not available status. See Fig.136,ABA Not Available Caution.

The ABA remains off until the driver deactivates the switch, or after a complete key cycle turns the ABA feature back ON.

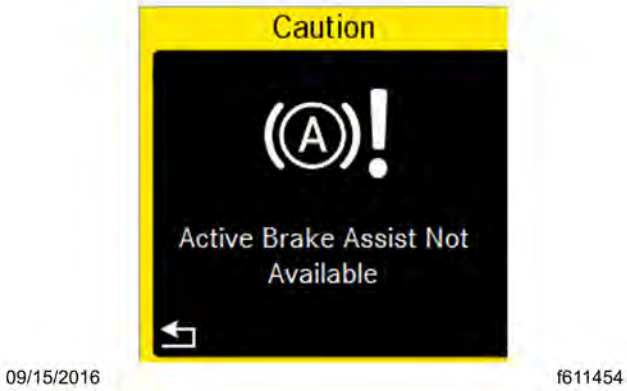

Fig 136, ABA Not Available Caution

Active Brake Assist 5 (ABA5) Collision Warning and Emergency Braking

If there is a risk of collision, ABA5 issues alerts on the driver display, illuminates the ABA indicator lamp, and sounds an audible warning. In addition, the radio and/or hands-free systems like Detroit Connect are automatically muted.

NOTE: A driver can override ABA during an ABA braking event by backing off the accelerator pedal, then pressing the accelerator pedal to the floor.

If there is a collision risk, ABA engages in the following cascade of warnings:

1. **Issues Warnings** : the radio and/or hands free system is muted, the vehicle issues a warning beeping, and an ABA collision warning window, shown in Fig.137,First Visual ABA Warning, ICUC appears on the driver display.

Fig 137, First Visual ABA Warning, ICUC

2. **Engages in Partial Braking** : ABA brakes the vehicle with around 50 percent of the vehicle's maximum braking power.

   The radio and/or hands free system stays muted, the warning beeping continues, and the ABA collision warning, shown in Fig.137,First Visual ABA Warning, ICUC. continues to appear or, if previously dismissed, reappears on the driver display.

3. **Engages in Emergency Braking** : If a driver does not react to the collision warnings or partial brake application, ABA brakes the vehicle with 100 percent of the vehicle's maximum braking power.

   The radio and/or hands free system stays muted, the warning beeping shifts to a continuous tone, and the emergency braking warning, shown in Fig.138,Second Visual ABA Warning, ICUC appears on the driver display.

Fig 138, Second Visual ABA Warning, ICUC

4. **Brakes Release** : The radio and/or hands free system is taken off mute, the warning tone ceases, and the notice shown in Fig.139,Third Visual ABA Warning, ICUC appears on the driver display.

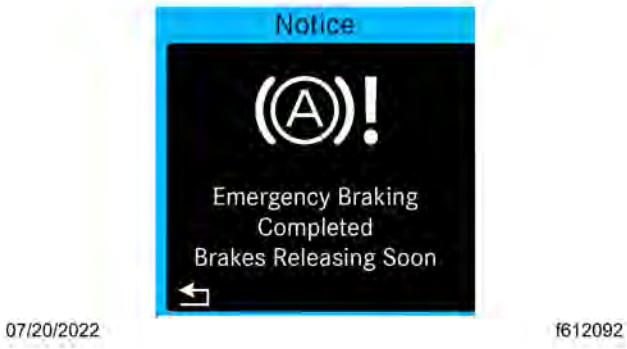

Fig 139, Third Visual ABA Warning, ICUC

The driver should take the first opportunity to safely move the vehicle from traffic. Before continuing, the driver should confirm that the vehicle is in good operating condition and that the load is still properly secured.

CAUTION:

After an emergency braking maneuver has been performed, if necessary, move the vehicle from the area of danger.

Take the first opportunity to safely move the vehicle from traffic to confirm the load is still properly secured and that the vehicle is still in good operating order. Failure to do so may result in personal injury and product or property damage

Always apply the parking brake prior to exiting the vehicle.

ACC and ABA5 Driving Condition Limitations

See Table.23,Adaptive Cruise Control (ACC) and Active Brake Assist 5 (ABA5) Limitations for a description of adaptive cruise control (ACC) and ABA5 limitations in specific driving conditions.

Table 23, Adaptive Cruise Control (ACC) and Active Brake Assist 5 (ABA5) Limitations

Active Brake Assist Limitations		
Condition	Visual	Description
Cornering, entering and exiting bends	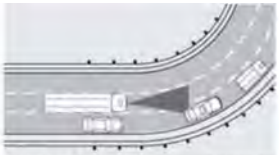 12/18/2014 f040840a	The ability of ABA5 and ACC to detect vehicles on bends is limited. ABA5 and ACC may unexpectedly issue warnings or brake the vehicle. ACC may also accelerate the vehicle unexpectedly.
Driving in a different lane, and stationary vehicles	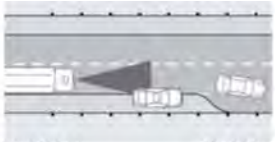 12/18/2014 f040835a	The ability of ABA5 and ACC to detect vehicles driving in a different lane, or stationary vehicles is limited. ABA5 and ACC may unexpectedly issue warnings or brake the vehicle. ACC may accelerate unexpectedly.

Other vehicles changing lane	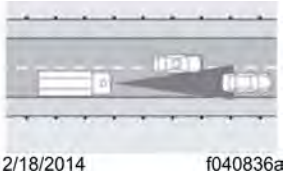 12/18/2014 f040836a	The ability of ABA5 and ACC to detect vehicles pulling into your lane is without maintaining a safe distance is limited. When a vehicle enters your lane the distance to it may be too short. Brake the vehicle to increase the distance to the vehicle in front.
	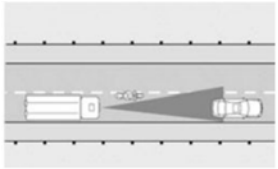 12/18/2014 f040841a	The ability of ABA5 and ACC to detect vehicles pulling into your lane is limited. They do not detect vehicles until they are within the system's detection range. Brake the vehicle to increase the distance to the vehicle in front.
Vehicles turning off	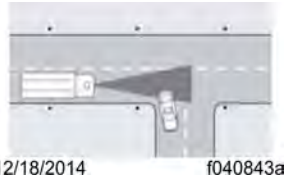 12/18/2014 f040843a	The ability of ABA5 and ACC to detect vehicles turning off is limited. ABA5 and ACC may unexpectedly issue warnings or brake your vehicle.
Overtaking	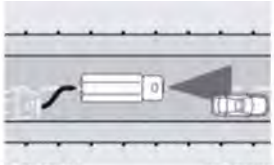 12/18/2014 f040838a	While passing, ABA5 and ACC may unexpectedly issue warnings or brake your vehicle if the vehicle in front is too close and is in the same lane.
Winding stretches of road	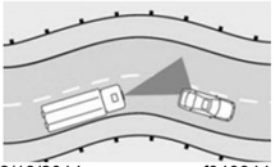 12/18/2014 f040844a	On winding stretches of road, ABA5 and ACC cannot detect which lane the vehicle in front is driving in. ABA5 and ACC may unexpectedly issue warnings or brake your vehicle. ACC may also accelerate the vehicle unexpectedly.
Obstacles and stationary vehicles	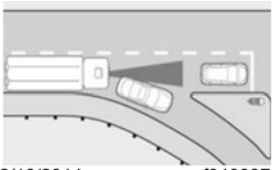 12/18/2014 f040837a	ABA5 and ACC cannot detect obstacles or stationary vehicles in front of the detected vehicle. If the detected vehicle turns off, ABA5 and ACC may unexpectedly issue warnings or brake your vehicle. ACC may also accelerate the vehicle unexpectedly.

Stationary objects	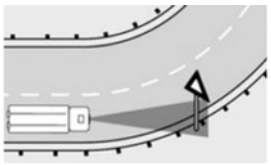 12/18/2014 f040842a	ABA5 can unexpectedly issue warnings and brake the vehicle if it detects stationary objects like: vehicles which have broken down signs bridges
Stationary people	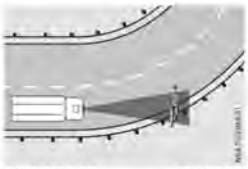 09/14/2016 f040847	ABA5 can react incorrectly to the following conditions: stationary people people or objects that quickly enter the field of detection of the sensor people in a tunnel ABA5 can also react unexpectedly to people who are standing on the roadside in a curve.

Table 23, Adaptive Cruise Control (ACC) and Active Brake Assist 5 (ABA5) Limitations

Overriding ABA Events

If ABA sets off an audio and/or haptic warning where the driver determines that no risk exists or the critical situation has resolved, an alert and conscientious driver may override the ABA braking event.

To override the ABA alert, fully depress the throttle to the floor. If you are already at full throttle, release the throttle and fully depress again to cancel the warning cascade.

6.02 Detroit Assurance 5.0 Vehicle Camera

6.02.01 Partial Obstruction Notice

CAUTION:

Detroit Assurance radar and camera-based collision mitigation safety systems serve to assist an attentive and responsible driver. The systems are not a substitute for safe driving practices. The driver remains fully responsible for maintaining vehicle control, observing traffic conditions, and reacting appropriately to hazards.

IMPORTANT: For optimal performance, the camera should remain as clear and unobstructed as possible. If partial obstruction of the camera is necessary because of equipment for vocational applications, the obstruction may affect the system's ability to accurately detect objects, interpret lane markings, or respond to potential hazards. Obstructions such as dirt, ice, snow, stickers, or mounted accessories—even if only partially covering the camera—may impair system functionality. Partial obstruction of the camera may result in decreased performance. The driver must always operate the vehicle with caution, as if the vehicle were not equipped with a radar or camera-based system. Always use mirrors, direct observation, and sound judgment to ensure safe operation.

6.02.02 Multipurpose Camera 2 (MPC2)

IMPORTANT: IMPORTANT: The windshield must be clean, unobstructed, and without damage for proper operation of the multipurpose camera and rain/light sensor.

The camera bracket that comes with Detroit Assurance 5.0 can hold a driver facing camera (DFC), multipurpose camera 2 (MPC2), and rain/light sensor (RLS). The unit is mounted against the windshield. See Fig. 140,Multipurpose Camera 2 Components.

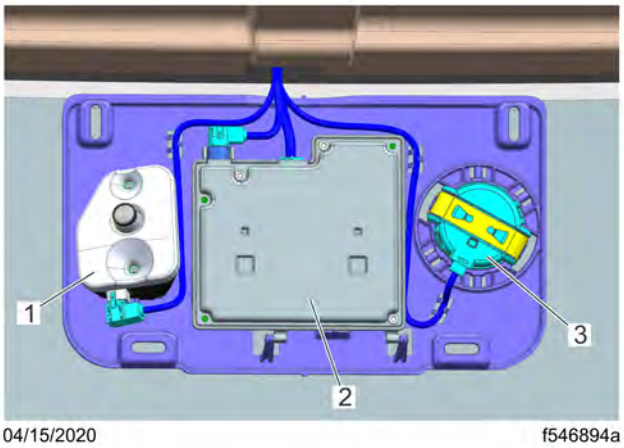

1. Driver Facing Camera, if equipped
2. Multipurpose Camera Two (MPC2), if equipped
3. Rain Light Sensor, if equipped

Fig 140, Multipurpose Camera 2 Components

The MPC2 works with the radar system to support multiple features within DA 5.0. It is important for the driver to keep the windshield clean and unobstructed in order for the MPC2 and rain/light sensor to operate properly.

6.02.03 Driver Facing Camera

The DFC records the interior view with a video capture feature in the case of a safety critical event.

6.02.04 Rain/Light Sensor

This sensor is used to detect rain, snow, or other precipitation on the windshield and determine the amount of ambient light. When precipitation is detected, the wipers, if set to either the first or second intermittent setting, will start clearing the windshield. When ambient light decreases to a preset level due to sunset, fog, or other event, and the headlight switch is set to the 'A' position, the low beam headlights and all exterior lights will turn on.

For additional windshield wiper and headlight information, see 5.01 Ignition Switch.

6.03 Detroit Assurance 5.0 Lane Departure Warning (LDW)

6.03.01 Safety Notes on Lane Departure Warning (LDW)

WARNING:

The lane departure warning (LDW) system is intended only as an aid for a conscientious and alert driver. Do not rely solely on the system to safely operate the vehicle.

The system may not indicate lane departures under certain conditions. Read the information in this manual to understand the circumstances under which this system may not provide adequate lane departure warnings.

The system does not warn of all possible hazards. The system cannot prevent an accident if the driver is impaired or not driving safely.

The LDW system is not a substitute for safe driving procedures.

Failure to drive safely and use the system properly could result in personal injury and/or death and severe property damage.

The system may be impaired or may not operate in the following situations:

- When there is low visibility due to insufficient road illumination, or due to snow, rain, fog, heavy spray, or other circumstances that limit visibility.
- When there is glare due to oncoming traffic, direct sunlight, or reflections from wet road surfaces.
- When the windshield in the area of the camera is dirty, misted up, damaged or covered by a sticker.
- When no lane markings or several varied lane markings are present, such as in a construction zone.
- When the lane markings are worn, dark, or covered, such as by sand, dirt, or snow.
- When the distance from the vehicle in front is too small and this prevents the lane markings from being detected.
- When the lane markings change rapidly, when lanes branch off, or when they cross or merge.
- When lanes are very narrow or winding.
- When shade conditions on the road surface change greatly.

The driver must adapt their driving style to current conditions. Lane departure warning (LDW) cannot take the road and weather conditions into account, nor the prevailing traffic situation. The driver is responsible for the distance to the vehicle in front, for vehicle speed, braking in good time and remaining in the lane.

6.03.02 Overview

Detroit Assurance 5.0 LDW monitors the area in front of the vehicle using the multipurpose camera mounted on the top of the windshield. When lane departure warning is active and detecting lane markings, it will visually and audibly warn the driver if it detects the vehicle leaving the lane without the turn signal being set. LDW only needs one identifiable lane line to function.

6.03.03 Functions and Activation Conditions for Lane Departure Warning (LDW)

The Detroit Assurance LDW system is designed to warn the driver if the vehicle crosses the outer boundary of the lane marking without the turning signal being set. This may differ from other LDW systems which issue a warning as the driver approaches the inside of the lane marking. If the system warns at, or just beyond the outer edge of the lane marking, the system is performing as designed. If the warning does not occur, or occurs after an excessive lane departure, the system may not be operating properly.

In addition to acting as a warning, lane markings on the driver display screen show the status of LDW. No lane markings or outlined lane markings indicate the LDW is off. Solid white or red lane markings indicate LDW is active.

LDW only issues warnings if the speed is above approximately 37 mph (60 km/h).

When driving over lane markings unintentionally, the volume of audio equipment like the radio and/or hands-free systems is muted and a direction-related ‘rumble-strip noise’ sounds from either the left or right door speaker.

LDW does not issue a warning if:

- the turn signals are switched on;
- there is braking or acceleration; or
- a driving safety system such as Active Brake Assist (ABA), Stability Control, or Adaptive Cruise Control (ACC) intervenes.

6.03.04 Activating or Deactivating Lane Departure Warning (LDW)

When the engine is turned on, LDW is automatically activated.

NOTE: There is no audible self-test of the ‘rumble-strip noise’ of the LDW when the key is turned on.

Pressing the physical LDW OFF switch will deactivate LDW for fifteen minutes. See Fig. 141,Lane Departure Warning Alert Switch. When the LDW is deactivated, the switch will illuminate.

A driver might want to turn off LDW on winding roads or when driving through construction zones or other areas where lane markings are not clear.

NOTE: Vehicles equipped with D.A. 5.0 and an MPC2 camera, but no LDW system may have a permanently illuminated LDW OFF switch as LDW has been disabled.

05/12/2016 f611413

Fig 141, Lane Departure Warning Alert Switch

LDW is not active if:

- the driver presses the LDW OFF switch; or
- the system is searching for a lane.

If there is a system error, the LDW telltale will illuminate in the driver display. See Fig. 142, LDW Telltale - ICUC.

07/19/2022 f611394

Fig 142, LDW Telltale - ICUC

6.03.05 Cleaning the Windshield

Make sure that the windshield is always kept clean and unobstructed in the area of the camera. The driver should switch on the windshield wiper to clean the windshield and remove snow and ice.

If the area of the windshield is damaged, LDW may not work as intended. If this happens, the windshield must be replaced.

6.04 Detroit Assurance Active Lane Assist (ALA)

The features in active lane assist (ALA) are intended only as aids for a conscientious and alert driver. Do not rely on ALA to safely operate the vehicle.

The driver is responsible for keeping their hands on the wheel at all times when ALA is active.

ALA may not indicate lane departures under certain conditions. Read the information in this manual to understand the circumstances under which ALA may not provide adequate lane departure warnings.

ALA does not warn of all possible hazards and is not a substitute for safe driving procedures.

Failure to drive safely and use ALA properly could result in personal injury and/or death and severe property damage.

Active Lane Assist Safety Information

Features in ALA may become inactive under conditions where lane markings cannot clearly be identified. These conditions include:

- low visibility, due to insufficient road illumination or due to snow, rain, fog, smoke, or heavy spray;

- glare from oncoming traffic, the sun, or reflection from other vehicles when the road surface is wet;
- the windshield being dirty, misted up, damaged, or covered in the vicinity of the camera;
- the lane markings being unclear, such as in a construction zone;
- the lane markings being worn, dark, or covered;
- the distance to the vehicle in front being too small and preventing the lane markings from being detected;
- the lane markings changing quickly—lanes branching off, crossing one another, or merging;
- the road being narrow and winding;
- highly variable shade conditions on the road surface;
- an attachment (such as a snow plow) restricting the camera's view of the lane markings;
- a significant change in load with the vehicle on. Start the vehicle after a significant change in load to have ALA available without restrictions.

ALA cannot take the road, weather conditions, or the current traffic situation into account. The driver is responsible for maintaining a safe distance to the vehicle in front, for vehicle speed, braking in good time, and remaining in the lane.

Active Lane Assist Overview

IMPORTANT: ACC must be active for LKA to be active. Deactivation of ACC also deactivates LKA.

NOTE: Earlier versions of ALA may not be equipped with the auto stop feature.

ALA with auto stop consists of:

- lane departure protection (LDP), a feature that builds on LDW
- lane keep assist (LKA)
- auto stop, a feature that builds on LKA

When ALA with auto stop is on, it monitors the area in front of the vehicle with the multipurpose camera mounted at the top of the windshield. Keep the windshield clean and unobstructed in the area of the camera.

The LDW/LDP function of ALA detects lane markings on the road surface, warns the driver they may be leaving their lane unintentionally, and, if a driver does not respond to these warnings, moves the vehicle back into the center of the lane. If the driver's preferred lane position is other than 'center,' LKA will move the vehicle into the requested lane position after the LDP intervention is complete.

The LKA function of ALA uses micro-steering adjustments to keep the vehicle in the driver's preferred lane position. It also monitor's the driver's steering, and if it senses the driver's hand's have been removed, cautions the driver to return their hands to the steering wheel.

Auto stop works with LKA to smoothly bring the vehicle to a safe stop after LKA has registered that the driver has had their hands off the steering wheel for 60 seconds. Auto stop works to increase the safety of all road users in the case of an incapacitated driver.

Active Lane Assist Activation Conditions

ALA is activated each time the vehicle is turned on.

The LDW/LDP component of ALA is ready to issue warnings and initiate actions as soon as the vehicle reaches 37 mph (60 km/h) and both lane lines are identified and show on the driver display as solid lane markings. LDP requires both lane lines to be identifiable to function; LDW only requires one lane line to function.

LKA is ready to issue warnings and initiate actions when cruise control is active and when the vehicle is driving forward at approximately 15-20 mph (24-32 km/h).

The LKA status indicator can appear as blue (active), grey (in passive mode; not shown), or red (an error with the adaptive power steering (APS) which deactivates ALA; not shown). The green Adaptive Cruise Control (ACC) indicator appears when the ALA feature is on.

1. Active Lane Keep Assist Indicator
2. Active Adaptive Cruise Control Indicator

Fig 143, Active Lane Assist - ICC5

The LKA status indicator can appear as blue (active), grey (in passive mode; not shown), or red (an error with the adaptive power steering (APS) which deactivates ALA; not shown). The green Adaptive Cruise Control (ACC) indicator appears when the ALA feature is on.

The status of LKA is shown by the color and design of the steering wheel telltales on the driver display screen.

- Blue hands-on steering wheel: LKA is on and actively steering.
- Grey hands-on steering wheel: LKA is on but inactive (due to glare, snow, bad lane lines, etc.).
- Red hands-on steering wheel: auto stop is active.
- Amber steering wheel with exclamation point: There is an problem with the electro-hydraulic power steering system which deactivates LKA.
- Red steering wheel with exclamation point: There is an error with the adaptive power steering (APS) which deactivates LKA or an error with LKA.
- No steering wheel icon: LKA is off or deactivated.

See Fig.143,Active Lane Assist - ICC5 and Fig.144,Active Lane Assist - ICUC for examples of an LKA status telltale in the driver display.

Auto stop initiates at the end of the LKA hands-on warning cascade and is activated only when LKA is active.

1. Active Lane Keep Assist Indicator
2. Active Adaptive Cruise Control Indicator

Fig 144, Active Lane Assist - ICUC

If the driver takes their hands off the steering wheel for fifteen seconds with Lane Keep Assist (LKA) active, an amber caution pop-up screen will appear (see Fig.145,LKA Caution Popup Screen) telling the driver to return their hands to the steering wheel. Doing so will cause the pop-up to disappear.

Fig 145, LKA Caution Popup Screen

Active Lane Assist Functions and Warnings

ALA works to keep the vehicle within the lane, issues warnings when a driver takes their hands off the steering wheel, and if necessary intervenes to bring the vehicle to a safe stop.

With the driver's hands on the steering wheel, the LKA feature of ALA engages in micro-steering adjustments to offset side winds, lateral road inclination, and other environmental forces to keep the vehicle in the driver's preferred lane position. The preferred lane position can be set by selecting 'Quick Access' > 'Follow Distance/Lane Position.' Options include: offset to the right, offset to the left, or center. The default lane position is center.

If the micro-steering of LKA cannot compensate for the sideways movement of the vehicle and the vehicle crosses over the lane markings with no turn signal activation, LDW issues a warning as follows:

- The exceeded lane markings are shown in red on the driver display screen.
- The volume of the audio equipment and/or hands-free system is muted.
- A warning rumble strip sound is broadcast from the speaker on the side of the exceeded lane markings.

If the driver does not steer the vehicle back into the lane or activate a turn signal, a warning notification appears on the driver display and LDP intervenes. An acoustic warning sounds while LDP guides the vehicle back into the center of the lane.

LDW does not issue a warning about traveling over lane markings if:

- a turn signal is switched on;
- a driving safety system, such as ABA, stability control, or ACC intervenes.

LDW only issues a visual warning about traveling over lane markings if the driver is braking, accelerating, or making a sharp turn.

In addition to helping keep the vehicle in the desired lane position, LKA monitors the driver's hands on the steering wheel. If LKA senses the driver's hands are not on the steering wheel, it issues a series of warnings.

If LKA is active and the driver takes their hands off the steering wheel for 15 seconds, an amber caution pop-up window appears telling the driver to return their hands to the steering wheel. Doing so causes the pop-up window to disappear.

If the driver does not return their hands to the steering wheel, at 30 seconds a red warning pop-up window appears and an acoustical warning starts to sound every five seconds.

If the driver does not return their hands to the steering wheel, at 55 seconds the acoustical warning starts to sound every second.

If the driver does not return their hands to the steering wheel, at 60 seconds the acoustical warning becomes a continuous loud audible warning and auto stop initiates.

As soon as the driver places their hands on the steering wheel, the LKA visual and audible warnings cease and the hands-off count is reset to zero.

LKA becomes inactive when the driver activates a turn signal and when auto stop activates.

LKA deactivates with the intervention of LDW/LDP, the deactivation of ACC, and if deactivated by the driver.

The auto stop feature of LKA activates at the end of the LKA cascade of hands-on warnings and engages the vehicle's service brakes to smoothly bring the vehicle to a complete stop while keeping it within the lane.

During an auto stop activation:

- a warning appears on the driver display stating that auto stop is active and providing override procedures, shown in Fig. 146,Warning that Auto Stop is Active, ICC5.
- the auto stop telltale of a red hands-on steering wheel, shown in Fig.147,Auto Stop Telltale appears on the driver’s display;
- when auto stop has brought the vehicle to a standstill, the auto stop telltale clears and a caution with the standstill override procedure appears on the driver display; see Fig.148,Auto Stop Finished Caution, ICC5.

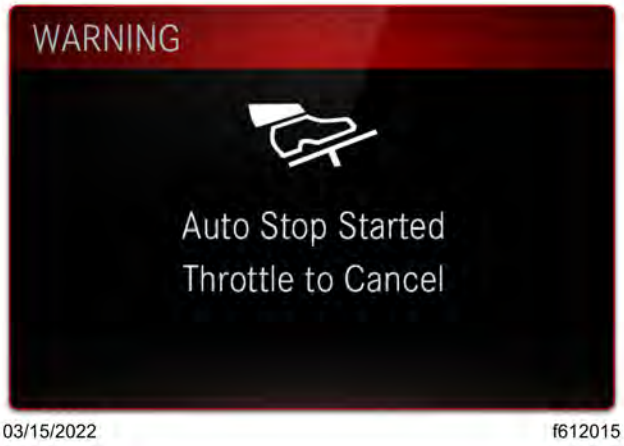

Fig 146, Warning that Auto Stop is Active, ICC5

Fig 147, Auto Stop Telltale

Fig 148, Auto Stop Finished Caution, ICC5

Once auto stop initiates, ACC is canceled. If active, ABA5 remains active while auto stop slows the vehicle.

After reaching a standstill, auto stop turns on the vehicle's headlights, cabin lights, and hazard lights, applies the hold brakes, and shifts the transmission into neutral.

If auto stop is initiated three times, a notification of misuse appears on the driver display, shown in Fig. 149, Caution that LKA is Unavailable Due to Detected Misuse - ICC5. the auto stop telltale clears, and ALA is deactivated. The driver must restart the vehicle to enable ALA. Deactivation of ALA deactivates LDP, LKA, and auto stop.

Fig 149, Caution that LKA is Unavailable Due to Detected Misuse - ICC5

Active Lane Assist (ALA) Switches

In a vehicle equipped with an ICC5, there are four possible switches related to active lane assist (ALA): two digital and two physical:

A physical LDW off switch, shown in Fig.152,Lane Departure Warning Alert Switch.

A physical LKA off switch, shown in Fig.150,Lane Keep Assist Off Physical Switch.

A digital LKA off switch, shown in Fig.151,Lane Keep Assist Off Digital Switch, ICC5.

Fig 150, Lane Keep Assist Off Physical Switch

02/25/2022 f612003

Fig 151, Lane Keep Assist Off Digital Switch, ICC5

ALA with auto stop can also be deactivated under 'Settings' > 'Driving Assistance.'

Pressing either a physical or digital LKA OFF switch turns off LKA for the key cycle. The switch light illuminates to show that LKA is off. Pressing the switch or restarting the vehicle turns LKA on.

Pressing the LDW OFF switch will turn off LDW and, by extension, LDP for fifteen minutes. When LDW is off, the light on the LDW alert switch illuminates.

A driver might want to turn off LDW on winding roads or when driving through construction zones or other areas where lane markings are not clear.

05/12/2016 f611413

Fig 152, Lane Departure Warning Alert Switch

6.05 Detroit Assurance Attention Assist

NOTE: This feature was made available on a very limited number of vehicles and as of 2022 is no longer an option.

General Information

If equipped, the attention assist feature issues a warning tone and suggests taking a break when it detects behavior typical of fatigued driver.

The attention assist warning is shown regardless of legally prescribed driving and rest periods.

The windshield must be kept clean and unobstructed in the area of the camera to ensure that attention assist works properly.

Safety Information

IMPORTANT: Attention assist is only an aid. It cannot always detect fatigue or lapses in concentration reliably or in time. Attention assist is not a substitute for a well-rested and attentive driver.

As attention assist monitors lane position, it may not operate as designed when the lane position is unclear due to conditions that restrict the multipurpose camera view, low visibility, poor or obscured lane makings, or winding roads.

If there is a significant change in load when the ignition is on, restart the vehicle for attention assist to be available without any restrictions.

Attention assist may also be restricted and a warnings may not occur or may be delayed if the driver is predominantly driving slower than 37 mph (60 km/h);

Function and Activation Conditions

Attention assist is active at speeds above approximately 37 mph (60 km/h).

Attention assist assesses the driver's level of fatigue or lapses in concentration by taking the following into account:

- driving characteristics, such as remaining in the lane and active steering
- trip related details such as the length of the drive
- use of turn signals
- use of the engine brake switch
- uncharacteristic changes in the accelerator pedal position

If attention assist detects typical indicators of fatigue or increasing lapses in concentration on the part of the driver a warning tone sounds and a caution window, shown in Fig.153,Attention Assist Caution Window - ICUC and Fig. 154,Attention Assist Caution Window - ICUC appears on the driver display. If ALA has been deactivated, it is automatically reactivated.

Fig 153, Attention Assist Caution Window - ICUC

Fig 154, Attention Assist Caution Window - ICUC

If the driver doesn't take a break when prompted, the soonest attention assist can issue another warning is 15 minutes.

When the engine is turned off or the vehicle is stationary for some time, attention assist resets its detection sequence.

Activating or Deactivating

Attention assist may be deactivated, or activated, in the ICUC instrument panel under 'Drive Time Systems' > 'Safety System Settings' > 'Attention Assist.'

6.06 Detroit Assurance Side Guard Assist (SGA) and Active Side Guard Assist (ASGA)

6.06.01 General Information

SGA provides assistance on the passenger-side of the vehicle while turning and changing lanes. SGA monitors the area on the passenger-side of the vehicle using two short range radar sensors. The radar sensors are mounted close to the rear of the passenger footsteps as shown in Fig.155,Radar Sensor with Cover. close to the rear of the passenger footsteps. The optional enhancement, ASGA, enables the brakes to automatically activate in certain low-speed passenger-side turns.

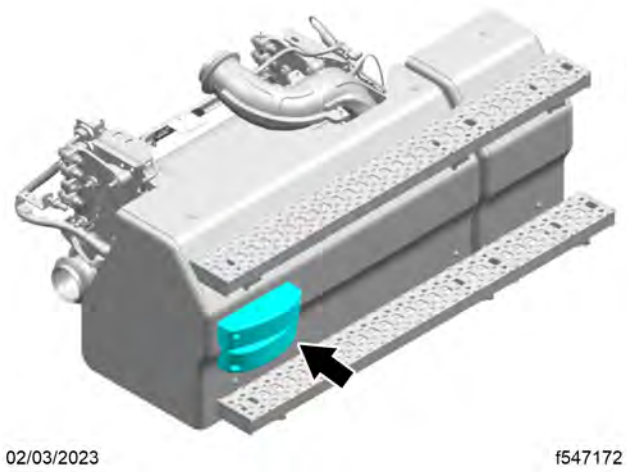

Fig 155, Radar Sensor with Cover

A triangular warning lamp in the A-pillar is located near the side mirror. This lamp shown in Fig. 156,Radar Sensor with Cover. lights up to inform the driver that an object has been detected in the monitored area. An additional warning tone sounds if there is a risk of collision.

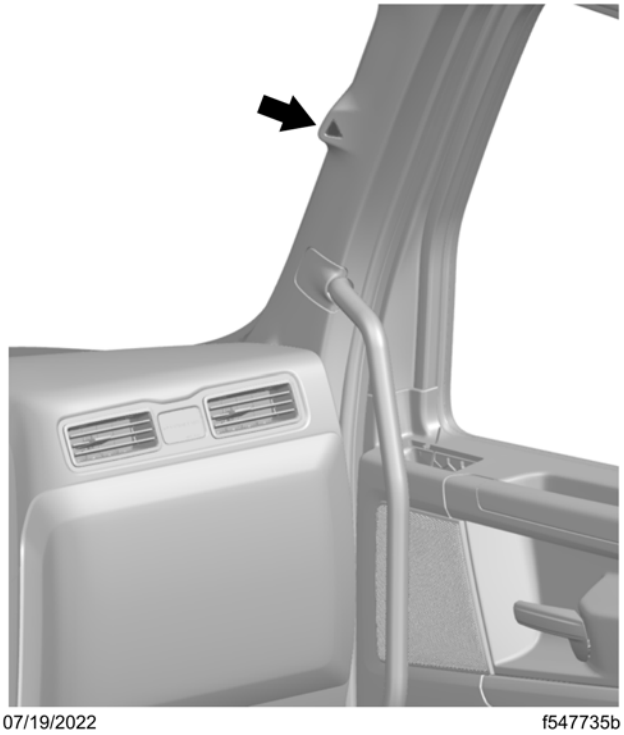

Fig 156, Radar Sensor with Cover

The ASGA engages at speeds less than 12 mph (19 km/h). If SGA detects a critical moving object in the sensor monitoring area along the side of the truck during a passenger-side turn, the ASGA automatically applies the brakes.

Fig 157, SGA Warning Lamp

6.06.02 Safety Information

SGA and ASGA are only aids for a conscientious driver. These guidelines serve as reminders for situations in which the driver must be especially alert and attentive. ASGA relies on SGA, if SGA is impaired, ASGA cannot provide notifications or assist during low speed, passenger-side turns when a critical object is present.

Before driving the vehicle, ensure the radar sensor cover is free from dirt, ice, or slush. If the sensors get dirty while driving, the telltale on the driver display may change from a grey triangle indicating active SGA to a grey triangle with a slash. In this case, pull off to a safe location to clean them. The radar sensors must be free of paint or other coverings such as stickers.

WARNING:

If detection is impaired, SGA may issue a warning too late or not at all. The following conditions can restrict detection of obstacles:

- dirty, icy, or obscured sensors
- very wide lanes
- vehicles not driving in the middle of their lane
- barriers or other road boundaries

The risk of an accident is increased in these situations.

The driver must pay attention to the traffic situation and maintain a safe distance at the side of the vehicle.

IMPORTANT: If the sensors are dirty or SGA malfunctions, a grey triangle alert icon with a slash or exclamation mark appears on the driver display. SGA has stopped tracking objects in the monitoring range and notifications are not available

Depending on the situation, SGA may issue a warning prematurely or not at all. In addition to unobstructed sensors, always ensure the distance to the side for other vehicles, cyclists, pedestrians, and obstacles is sufficient.

Be cautious and attentive in the following scenarios. SGA notifications may be delayed, inactive, in error, or interrupted.

- May be inactive for a short duration after pulling away from a loading dock.
- Inactive on objects within approximately 6 inches of the passenger-side of the vehicle. Objects within this area are not detected.
- In error when driving close to barriers or other solid boundaries. For example driving through construction sites, see Activating and Deactivating SGA for more information.
- Interrupted during prolonged driving alongside particularly long vehicles.

See an authorized dealer to have the function of the radar sensors checked if any of the following circumstances are true:

- If the vehicle is involved in a severe accident.
- If there is damage to the passenger-side footsteps.
- If the needs servicing telltale, a grey triangle with an exclamation mark, appears in the driver's display.
- If SGA malfunctions.

6.06.03 Sensor Monitoring Range of SGA

The sensor monitoring range is the area on the passenger-side of the vehicle that the sensors can assess for proximity of moving objects and stationary obstacles. The active monitoring range is shown in Fig. 158, **Sensor Monitoring Range of SGA**.

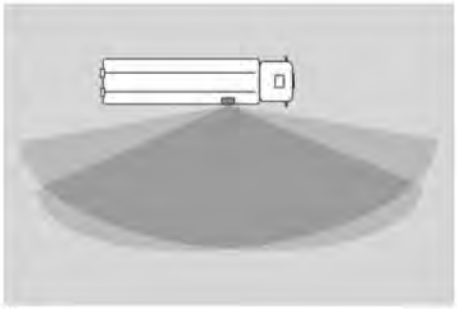

SGA only monitors the passenger-side of the vehicle. The two dark cones indicate two sensors: one angled toward the front of the truck; one angled toward the back. Objects within 6-inches of the truck are not detected. Monitoring of other areas would require additional equipment that is outside the scope of this section.

Fig 158, Sensor Monitoring Range of SGA

SGA only monitors the passenger-side of the vehicle. The two dark cones indicate two sensors: one angled toward the front of the truck; one angled toward the back. Objects within 6-inches of the truck are not detected. Monitoring of other areas would require additional equipment that is outside the scope of this section.

6.06.04 SGA Telltales

NOTE: The telltales described as grey may appear white depending on the type of instrument panel installed in the vehicle. Amber telltales raise awareness of an object. Red telltales warn of a possible collision. See Fig. 159, **SGA Telltale Locations, ICUC** and Fig.160,SGA Telltale Locations - ICC5.

On start up, the driver knows the vehicle is equipped with SGA if the SGA icon appears in the Detroit Assurance screen along with ABS. An SGA initializing telltale, the first telltale in Table.24,Side Guard Assist Telltales, appears on the driver display screen as the startup sequence continues.

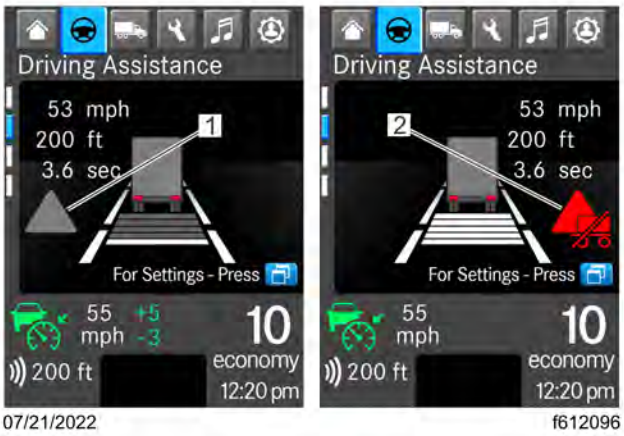

In a left-hand drive vehicle, SGA activation state (grey) telltale appears to the left of center on the driver display driving assistance screen; the amber (not shown) and red warning telltales appear to right of center.

1. Location of SGA Activation State (Grey) Telltale
2. Location of SGA Warning Telltales

Fig 159, SGA Telltale Locations, ICUC

In a left-hand drive vehicle, SGA activation state (grey) telltale appears to the left of center on the driver display driving assistance screen; the amber (not shown) and red warning telltales appear to right of center.

In a left-hand drive vehicle, the SGA activation state (grey) telltale appears to the left of center on the driver display driving assistance screen; the amber (not shown) and red warning telltales appear to right of center. The red warning telltale is accompanied by a pulsing red light animation.

This figure exists solely to illustrate the SGA telltale locations on the driver display screen; these telltales cannot appear at the same time.

1. Location of SGA Activation State (Grey) Telltale
2. Location of SGA Warning Telltales

Fig 160, SGA Telltale Locations - ICC5

In a left-hand drive vehicle, the SGA activation state (grey) telltale appears to the left of center on the driver display driving assistance screen; the amber (not shown) and red warning telltales appear to right of center. The red warning telltale is accompanied by a pulsing red light animation.

This figure exists solely to illustrate the SGA telltale locations on the driver display screen; these telltales cannot appear at the same time.

After startup, the driver display shows the status of SGA and the conditions detected. SGA is active and a grey triangle appears on the driver display screen.

If SGA monitoring experiences an error or is deactivated, a grey triangle with a slash appears.

If SGA monitoring is deactivated, a triangle with a slash appears.

NOTE: When the transmission is shifted to reverse, the SGA OFF telltale appears in the display until the transmission is shifted back to Neutral (N) or forward gears.

After SGA is turned off, it remains off until the driver until the driver turns the SGA feature on using the driver display or by stopping and turning the vehicle off and on again. When the vehicle is running and SGA is turned off, the driver display shows the Side Guard Assist Error or Deactivation telltales shown in Table.24,Side Guard Assist Telltales.

NOTE: Depending on the type of instrument panel installed in the vehicle, the telltales described as grey may appear white.

Alerts are color-coded to indicate severity. Red indicates a condition that may pose a threat to control of the vehicle. Amber indicates a condition that may result in damage to vehicle components. Grey is used for notices.

Table 24, Side Guard Assist Telltales

Name	Telltale	Color
Side Guard Assist Initializing		Grey
Side Guard Assist Active		Grey
Side Guard Assist Error or Deactivation		Grey
Side Guard Assist Needs Servicing		Grey
Caution, Side Guard Assist		Amber
Warning, Side Guard Assist		Red

Table 24, Side Guard Assist Telltales

6.06.05 Activating and Deactivating Side Guard Assist

SGA becomes active when the ignition is turned on. The driver controls its setting using the driver assistance screen of the ICU also known as the digital switch or a physical switch if equipped.

In some operational conditions, such as construction zones, SGA may register false positives.

Vehicles built from January 2023 have an optional SGA OFF physical switch as shown in Fig. 161,Physical SGA OFF Switch.

Fig 161, Physical SGA OFF Switch

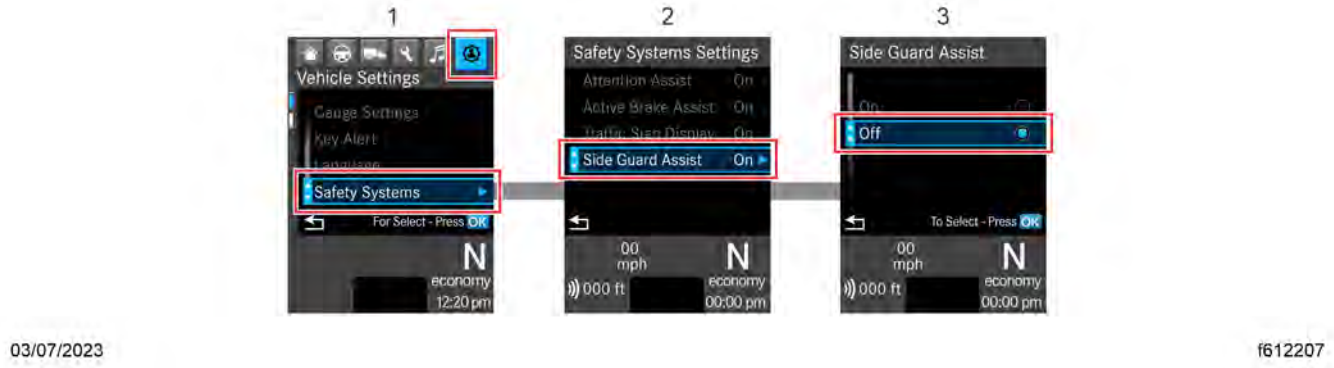

1. Vehicle Settings Menu and Safety Systems Item.
2. Selection of Side Guide Assist.
3. SGA Off option.

Fig 162, Deactivation of SGA in the Driver Display, ICUC

While the vehicle is running and SGA is OFF, the driver display shows the side guard assist deactivation or error telltales as shown in Table.25,Side Guard Assist Telltales.

After SGA is turned off, it remains off until the driver turns the SGA feature ON using one of the following:

- the switch, if equipped,
- the driver assistance screen on the driver display,
- stopping and turning the vehicle off and on again.

SGA is automatically activated when the ignition is turned on. The ASGA relies on SGA and its activation is not controlled separately by the driver. The ASGA engages at speeds less than 12 mph (19 km/h). If SGA detects a critical moving object in the sensor monitoring area along the side of the truck during a passenger-side turn, the ASGA automatically applies the brakes.

Although monitoring is continuous, the audible and visual alerts can be deactivated fully. With the default setting, the SGA notifications are active for both the vehicle as shown in Fig.163,Notifications Zones for SGA while Active. Stationary and moving objects detected within range activate cautions and warnings.

A driver can override SGA and ASGA during a braking event by backing off the accelerator pedal, then pressing the pedal to the floor.

The driver can keep the default settings for SGA notifications to alert for objects within the range of the vehicle.

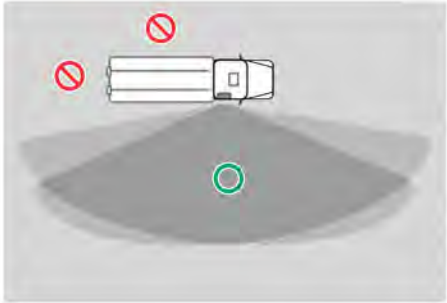

05/05/2023 f611532d

Fig 163, Notifications Zones for SGA while Active

In some operational conditions, such as construction zones, SGA may register false positives. The driver can turn SGA alerts off manually for the truck using the driver assistance settings of the driver display.

After stopping safely, the driver can use the driver display to change the alert settings. For vehicles equipped with ICUC, the settings are shown in Fig.164,Deactivating SGA in the Driver Display, ICUC.

For vehicles equipped with ICC5, the alert settings are shown in Fig.165,Deactivating SGA in the Driver Display, ICC5.

If the vehicle is equipped with an ICUC instrument control panel, the driver display offers SGA for the vehicle.

03/07/2023 f612207

1. Vehicle Settings Menu and Safety Systems Item
2. Selection of Side Guide Assist
3. SGA Off Option.

Fig 164, Deactivating SGA in the Driver Display, ICUC

If the vehicle is equipped with ICC5 instrument panel, the display has digital toggles for turning features on and off.

1. Settings Menu and Driver Assistance Item.
2. Side Guide Assist.
3. SGA Off option.

Fig 165, Deactivating SGA in the Driver Display, ICC5

Table 25, Side Guard Assist Telltales

Name	Telltale	Color
Side Guard Assist Initializing		Grey
Side Guard Assist Active		Grey
Side Guard Assist Error or Deactivation		Grey
Side Guard Assist Needs Servicing		Grey
Caution, Side Guard Assist		Amber
Warning, Side Guard Assist		Red

Table 25, Side Guard Assist Telltales

6.06.06 Driving Scenarios and SGA Warnings

IMPORTANT: SGA is only an aid. The system may fail to detect some objects and does not substitute for attentive driving. Always ensure that sufficient distance is to the side for vehicles, cyclists, pedestrians, and obstacles.

The scenarios shown in Table.26,Common Scenarios for Warnings While SGA is Activated assume SGA Assist. If SGA is off in any of these scenarios, the driver does not experience the notifications mentioned.

Table 26, Common Scenarios for Warnings While SGA is Activated

Warning Scenarios	Driver Experience
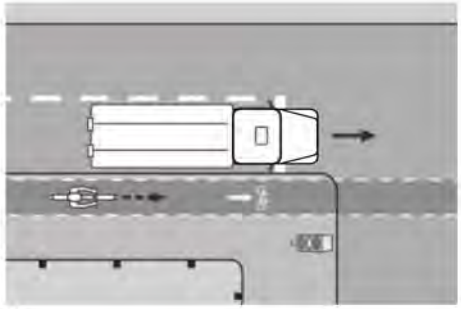 05/05/2023 f611533a	Moving object detected along side the vehicle. An amber SGA warning lamp in the A-pillar activates and the ICU displays the appropriate caution telltale.
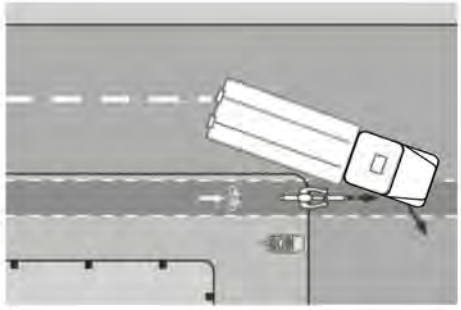 05/05/2023 f611534a	Moving detected while turning. If the driver signals or steers to the passenger-side and there is a risk of collision with an object, the red SGA warning lamp in the A-pillar flashes for a few seconds, a warning tone sounds, and the appropriate SGA warning telltale on the driver display screen. After flashing, the red warning lamp stays on as long as there is a risk of a collision. If the vehicle is moving at urban speeds and equipped, ASGA automatically applies the brakes.
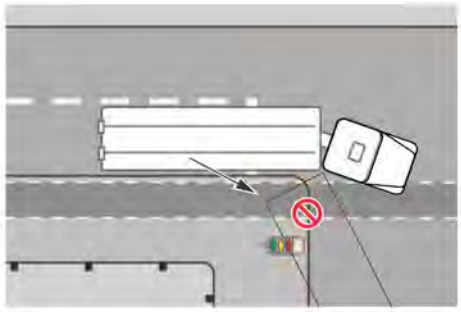 04/19/2023 f612213a	Limitations to detection of risk to the trailer's back corner while turning. The ability of SGA and ASGA to detect and react to stationary objects alongside the end of the trailer as it completes a passenger-side turn is limited. If the driver steers to the passenger-side there is a risk of collision without notification when the end of the trailer and its bumper reaches a stationary object.

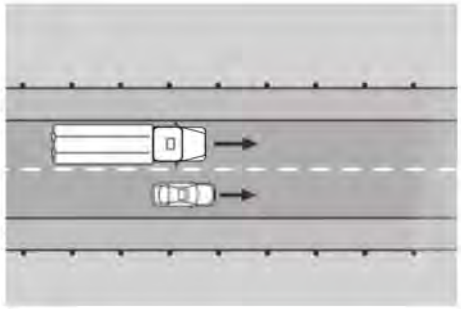 05/05/2023 f611535a	Moving object detected by vehicle sensor before a lane change. If a moving object is in SGA monitoring range when a driver signals or steers to the passenger-side, an amber warning lamp activates in the A-pillar and the appropriate SGA caution telltale appears on the driver display screen. If there is a risk of collision, the red warning lamp in the A-pillar flashes, a warning tone sounds, and the appropriate SGA warning telltale appears on the driver display screen. The red warning lamp stops flashing after a few seconds but stays on as long as there is a risk of a collision.
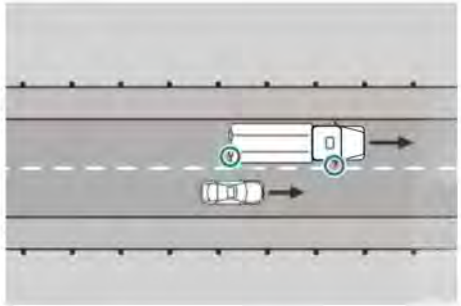 05/05/2023 f611536a	Moving object detected by the sensors before a lane change. SGA warns the driver about stationary obstacles in the vehicle's range of movement up to a maximum speed of 22 mph (35 km/h). If there is a risk of collision with a stationary obstacle when turning, the red warning lamp in the A-pillar flashes, a warning tone sounds, and the appropriate SGA warning telltale appears on the driver display screen. The red warning lamp stops flashing after a few seconds but stays on as long as there is a risk of a collision.

Table 26, Common Scenarios for Warnings While SGA is Activated

6.07 Detroit Assurance Traffic Sign Display

6.07.01 General Information

NOTE: If a vehicle is equipped with traffic sign display, the ICU will display up to two traffic signs at a time. If more than two signs are recognized by the system, the most safety critical signs will be displayed.

NOTE: Traffic sign display requires IPM to function.

The traffic sign recognition and display system increases road safety by making the driver aware of posted traffic signs. Traffic sign display uses video data from the multipurpose camera in combination with the GPS map data from IPM to recognize USA and Canadian traffic signs and display them in the instrument panel. GPS information dictates the language and style of the ICU sign display.

6.07.02 Safety Information

Traffic sign recognition and display is only intended as an aid for a conscientious and alert driver. The system may not operate as designed under the following conditions:

- there is low visibility, due to insufficient road illumination or due to snow, rain, fog, or heavy spray;
- there is glare from oncoming traffic, the sun, or reflection from other vehicles when the road surface is wet;
- the windshield is dirty, misted up, damaged, or covered, for instance by a sticker, in the vicinity of the camera;
- the traffic signs are partly or fully covered by other vehicles, bushes, or trees;
- the traffic signs are designed in a non-standardized form, with additional text, or as LED panels;
- the traffic signs are damaged, bent, twisted, stained, or scratched;
- the distance from the vehicle in front is too small and prevents the traffic signs from being detected in time;
- the traffic signs are posted on the far side of the road or very high above the road;
- the road is very wide, winding, or has sharp turns;

- there are variable shade conditions on the road surface;
- GPS satellite reception is limited due to geographical location or development along the road;
- onboard map data is outdated due to recent changes in local traffic regulations or new road layout.

The traffic sign recognition system cannot take the road and weather conditions into account, nor the current traffic situation. The driver is responsible for the distance to the vehicle in front, for vehicle speed, braking in good time, and remaining in the lane.

6.07.03 Traffic Sign Display Functionality

NOTE: Only three types of USA and Canadian traffic signs are currently detected:

- speed limit signs (from speeds 5 to 140)
- passing signs
- exclusion signs

See Fig. 166,Recognized Traffic Signs, USA for currently recognized USA signs and Fig. 167,Recognized Traffic Signs, Canada for Canadian signs.

1. General Speed Limit
2. Truck Speed Limit
3. Night Speed Limit (only at night)
4. School Speed Limit
5. Do Not Pass
6. Pass With Care
7. No Trucks

Fig 166, Recognized Traffic Signs, USA

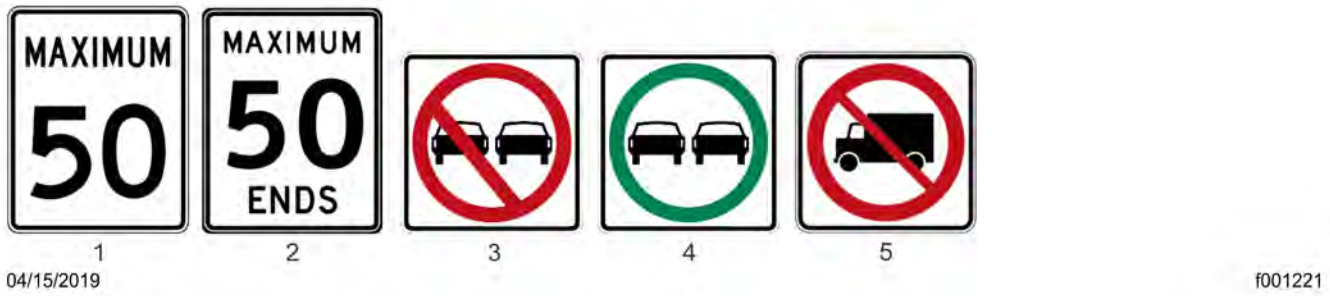

1. General Speed Limit
2. Speed Limit Ends
3. No Overtaking
4. Overtaking Permitted
5. No Trucks

Fig 167, Recognized Traffic Signs, Canada

When a traffic sign is recognized by the system, an image representing it appears in the instrument panel. See Fig. 168,Traffic Sign Display - ICUC. In order to operate, the traffic sign display feature must be activated in the instrument panel menu.

A. Detected Speed Limit and Do Not Pass signs displayed.

Fig 168, Traffic Sign Display - ICUC

6.07.04 Activating or Deactivating

NOTE: When the ignition is turned on, traffic sign display restores the state of the system (either activated or deactivated) from the last ignition cycle.

Activating traffic sign display in the ICUC instrument panel:

1. Navigate to ‘Drive Time Systems.’
2. Go to ‘Safety System Settings.’
3. Go to ‘Traffic Sign Display.’
4. Select ‘On.’

   Select 'Off' to deactivate traffic sign display.

6.08 Standard Cruise Control

6.08.01 Standard Cruise Control

WARNING:
Do not use the cruise control system when driving conditions do not permit maintaining a constant speed, such as in heavy traffic or on roads that are winding, icy, snow-covered, slippery, or roads with a loose driving surface. Failure to follow this precaution could cause a collision or loss of vehicle control, possibly resulting in personal injury or property damage.

NOTICE:
When the cruise control is engaged, do not attempt to shift gears without using the clutch pedal. Failure to follow this precaution will result in a temporarily uncontrolled increase in engine speed. Transmission damage and gear stripping could result.

NOTE: If the vehicle is equipped with a Detroit D12 automated transmission, setting the cruise control with the engine brake on will activate cruise descent control mode. Moving the transmission shift lever to the top position will resume the set cruise speed. Moving the lever down to engage the engine brake after the cruise control has been set will activate deceleration mode. See ‘Cruise Descent Control and deceleration modes, Detroit™ Automated Transmissions’ in this chapter.

In the ICUC, standard cruise control is operated by three switches mounted in the right-hand switch pod of the steering wheel. See Fig. 169,Steering-Wheel-Mounted Right-Hand Switch Pod - ICUC.

1. Cruise Accelerate/Resume
2. Quick Access System Settings
3. Cruise Decelerate/Set
4. Phone Hang-Up/Reject
5. Marker Interrupt**
6. Phone Pick-Up
7. Headlamp Interrupt**
8. Cancel Cruise Control
9. **Not available in all markets

Fig 169, Steering-Wheel-Mounted Right-Hand Switch Pod - ICUC

- Cruise Decelerate/SET Button—Press to set the cruise speed while the vehicle is traveling at the desired speed. Press and hold to decrease the set cruise speed by 5 mph increments (Detroit Diesel engines only). Single press decreases cruise speed by 1 mph. When cruise control has been set, the driver display static menu in the ICUC shows relevant cruise control icons and the set speed. See Fig. 170,Static Menu - ICUC. The speed memory will be retained until the ignition is turned off.

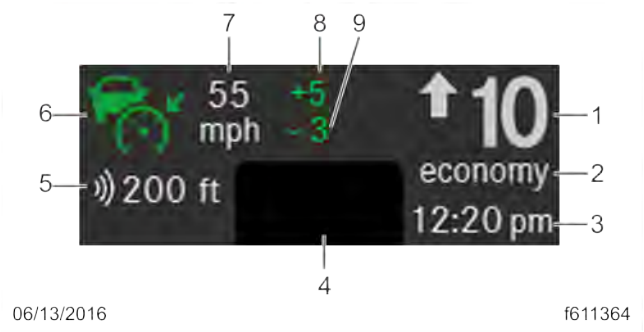

1. Gear Indicator
2. Gear mode
3. Clock
4. Soft Telltales
5. Adaptive Cruise Control and Tracked Vehicle Distance
6. Cruise Control Symbol (adaptive cruise control shown)
7. Cruise Control Set Speed
8. Cruise Control Overspeed
9. Cruise Control Underspeed

Fig 170, Static Menu - ICUC

- CNCL Button—Press to pause the cruise control, while retaining the speed setting in memory. The cruise control can also be disengaged, while retaining the speed memory, by depressing the brake or clutch pedals.
- Cruise Accelerate/RES Button—Press to resume the set speed. Press and hold to increase the set cruise speed by 5 mph increments (Detroit Diesel engines only). Single press increases cruise speed by 1 mph. If no previous set speed is stored, pressing the button sets the cruise speed.

NOTE: Cruise control is cancelled if the brake or clutch pedal is depressed, or vehicle speed drops below the minimum cruise control speed.

1. To cruise at a particular speed:
   1.a Depress the accelerator pedal until the speedometer reaches the desired speed.
   1.b Press the cruise decelerate/SET button to set the desired speed.

NOTE: The speed memory is lost whenever the ignition switch is turned to OFF.

2. To disengage the cruise control, do one of the following:
   - In the ICUC system, press the CNCL button in the center of the right-hand steering-wheel-mounted switch pod. A single press disengages the cruise control, but retains the set speed. Press and hold to clear the set speed (Detroit Diesel engines only).
   - Depress the brake pedal.
   - Depress the clutch pedal (on a manual transmission only).
3. To resume a preselected cruise speed, press the cruise accelerate/RES button. Cruise will return to the last set speed.

NOTE: If vehicle speed drops below the minimum cruise control speed, cruise control will disengage. To resume to the preselected cruise speed, increase vehicle speed to above minimum cruise control speed and press the cruise accelerate/RES button.

4. To increase cruise speed, press the cruise accelerate/RES button until the desired set speed is displayed.

5. To decrease cruise speed, press the cruise decelerate/SET button until the desired set speed is displayed.

   The cruise speed hysteresis (maximum speed above and below the set speed) can be set in the ICU settings menu.

   On vehicles with adaptive cruise control, the leading vehicle following distance can be set in the Quick Access menus.

6.08.02 PasSmart

On vehicles equipped with PasSmart, the driver can exceed predetermined road limit speed temporarily. The PasSmart function is initiated by double-pumping the accelerator pedal. When the predetermined road limit speed is exceeded, the driver display shows the status and time remaining until the vehicle decelerates. See Fig. 171,PasSmart Alert Screen - ICUC.

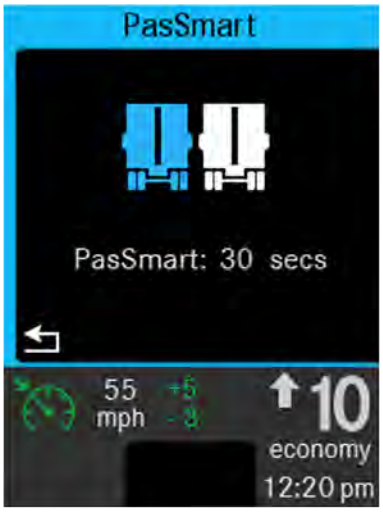

06/13/2016 f611410

Fig 171, PasSmart Alert Screen - ICUC

6.08.03 Intelligent Powertrain Management (IPM)

NOTE: IPM isn't an option with a DT12 transmission.

IPM is an optional fuel savings application that functions as a predictive cruise control. Using 3D digital map technology and GPS, IPM evaluates the upcoming road grade about a mile in advance to determine the best use case for most fuel-efficient vehicle speed and gear selection.

If equipped, an indicator on the driver display illuminates when one of the IPM modes is activated. See Fig. 172,IPM Active on the Driver Display - ICUC.

1. IPM Active Indicator

Fig 172, IPM Active on the Driver Display - ICUC

The 3D digital map database contains profile information for over 200,000 highway miles (322,000 km) in the 48 contiguous United States, the Trans-Canada Highway, and most major Canadian highways. IPM will vary the cruise speed, depending on the approaching road grade. For a vehicle equipped with the Economy Package, the default variance is +5/–4 mph(+8/–6 km/h). If the engine brake is enabled, IPM may automatically engage the engine brake at speeds higher than the cruise set speed.

Key predictive features of IPM are:

- Steep Mountain Mode—applies if the vehicle will not maintain cruise set speed while climbing. To balance travel time while saving fuel, the vehicle will first predictively accelerate before starting the climb, and may slow down as it approaches the crest of the hill. In this scenario the speed is allowed to fall below the cruise control underspeed.
- Crest Coasting—reduces speed before cresting a hill
- Dip Coasting—increases speed before a dip
- Predictive Shifting—selects a gear shifting strategy for upcoming terrain
- Load Balancing—maintains most efficient power for near zero road grades; small fluctuation in road speed may be seen from cruise set speed by ±1 or 2 mph
- Predictive Adaptive Cruise Control—if equipped with adaptive cruise control (ACC), allows IPM to increase following distance

IMPORTANT: IPM behavior is different from that of conventional cruise control. The system incorporates features to improve the overall driver experience. Some key points to remember are:

- IPM is active only when cruise control is engaged.
- IPM only controls speed within the upper and lower bounds of the cruise set speed. The upper and lower set limits may be exceeded up to 2 mph (3 km/h) for a limited time during dip coasts, as IPM predicts the terrain demands for the most fuel-efficient performance. The driver is responsible for setting a speed appropriate for the conditions and grade. If equipped, IPM upper and lower bounds can be adjusted by selecting the quick access button on the steering wheel.
- IPM can engage eCoast sooner, later, or not at all compared to conventional cruise control.
- IPM may automatically engage the engine brake at a higher speed than the cruise set speed.
- If IPM becomes unavailable, conventional cruise control can still function.

WARNING:

Apply the brakes and downshift as necessary when driving on downhill grades. IPM does not adequately control vehicle speed on steep downhill grades. Failure to use normal braking techniques when IPM is active could result in personal injury and vehicle damage.

IMPORTANT: IMPORTANT: IPM adjusts the vehicle set speed to achieve maximum fuel economy, but it does not account for traffic flows or surrounding vehicles.

For best fuel-savings, use cruise control whenever possible. Driver interaction with IPM is the same as conventional cruise control, using the standard cruise control buttons. In the event of a problem with IPM, or when driving on a road with no profile information available, the system reverts to conventional cruise control.

Using the accelerator pedal will abort the current IPM session. Disengaging the cruise control will also disengage IPM.

6.08.04 Cruise Descent Control and Deceleration Modes, Detroit™ Engines

On vehicles equipped with a Detroit engine, the functions of the engine brake controls change, depending on which specialty braking mode is being utilized. Two distinct modes can be activated:

- Cruise Descent Control Mode—engine braking attempts to maintain a set speed; accelerator pedal is not automatically applied.
- Deceleration Mode—engine braking activates to reduce vehicle speed (with no lower limit) at a constant rate.

Cruise Descent Control Mode

NOTE: Before engaging Cruise Descent Control, determine an appropriate speed for the vehicle's load and grade of the road.

The cruise descent control mode helps control the vehicle and engine speed when descending a grade.

To activate the cruise descent control mode, manually set the engine brakes with the shifter stalk and, while the engine brakes are actively working, set cruise to the desired descent speed. A cruise descent control mode engaged icon will appear on the ICUC screen showing it is active. See Fig. 173,Cruise Descent Control Active.

08/11/2022 f611817

1. Icon Showing Cruise Descent Control Mode Engaged

Fig 173, Cruise Descent Control Active

The cruise descent control mode will attempt to manage the vehicle's speed by varying the engine brake level.

The driver should be ready to intervene by applying the service brakes if the grade is too steep and the vehicle is traveling too fast. Applying the service brake to slow the vehicle will not cancel cruise control. Once the service brake is released, the vehicle speed becomes the new cruise descent control set speed. A pop-up will appear on the instrument cluster screen to notify the driver of the new speed. See Fig. 174,New Descent Mode Set Speed Pop-Up.

08/08/2022 f611818

Fig 174, New Descent Mode Set Speed Pop-Up

When the vehicle's descent is complete, return the engine brake stalk to the OFF/Auto position. At this point the cruise descent control set speed will become the new cruise speed.

Deceleration Mode

Deceleration mode reduces the vehicle speed at a constant rate.

While in cruise control, activate Deceleration Mode by turning on the engine brake, shown in Fig. 175,Deceleration Mode Positions, Automated/Automatic Transmission Multifunction Control, lever position 1, 2, or 3. The vehicle will decelerate at a constant rate until the vehicle comes to a stop, unless the accelerator pedal is applied to override the deceleration, or the lever is moved to 'engine brake off' (position 0).

Moving the lever to position 0 resumes the previously set cruise control speed.

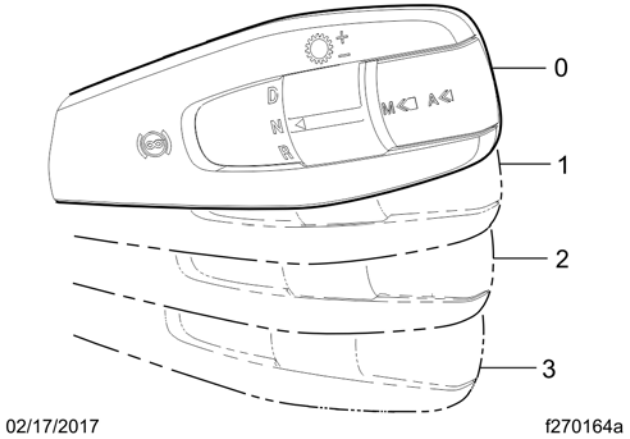

1. Resume cruise control set speed.
2. Low
3. Medium
4. High

Fig 175, Deceleration Mode Positions, Automated/Automatic Transmission Multifunction Control

6.09 Hill Start Aid

The hill start aid (HSA) feature prevents the vehicle from rolling on a slope steeper than three percent to allow for a controlled launch.

HSA prevents a stationary vehicle in forward gear from rolling downhill prior to continuing to drive up the hill; HSA also prevents a stationary vehicle in reverse gear from rolling downhill prior to continuing to back up the hill.

HSA delays the release of service brakes until enough torque is available to begin moving the vehicle, up to a maximum of three seconds. If sufficient driveline torque is not detected after three seconds, the system audibly alerts the driver and releases the brakes.

HSA is on by default. It can be turned off by pressing the HSA OFF dash switch shown in Fig. 176,Hill Start Aid Off Dash Switch.

Fig 176, Hill Start Aid Off Dash Switch

When hill start aid is inactive, the HSA OFF telltale, shown in Fig.177,Hill Start Aid Disengaged Telltale. flashes on the driver display screen.

05/16/2022 f611712a

Fig 177, Hill Start Aid Disengaged Telltale

To turn hill start aid on again, press the HSA OFF switch or cycle the vehicle keyswitch.

If the hill start aid disengaged telltale appears as a solid image on the driver display screen, there is a fault in the system.

6.10 Hold Function

The hold function eases the strain of driving in stop-and-go traffic by allowing the driver to "hold" the brake without constantly applying pressure to the brake pedal. The hold function is an extension of hill start aid (HSA).

To activate the hold function, bring the vehicle to a complete stop, then press the brake pedal further toward the floor. The HOLD telltale, shown in Fig.178,Brake Hold Active Telltale illuminates on the driver display to indicate the function is active and the vehicle's brake lights come on. The driver can then take their foot off the brake pedal without releasing the service brakes.

If the brake pedal is pressed down farther, air is added to the chamber, continuing the brake hold.

03/18/2022 f612019

Fig 178, Brake Hold Active Telltale

To release the brake hold, press the accelerator pedal, engage the park brake, or rapidly apply and release the brake pedal.

The hold function is deactivated when the HSA OFF switch is pressed to disable HSA.

The hold function cannot be engaged if any of the following are true:

- The hold function cannot be engaged if any of the following are true:
- the anti-lock braking system is in a fault state, or
- the vehicle is in reverse gear.

If the hold function is active for four minutes, the window shown in Fig.179,Engage Park Brake Message appears on the ICU warning the driver to engage the park brake. An audible alarm activates at the same time and repeats every minute until the park brake is set.

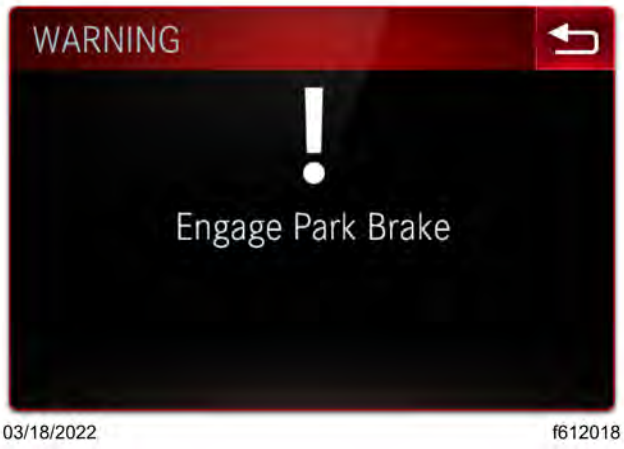

Fig 179, Engage Park Brake Message

The same warnings are triggered if the hold function is active and:

- the ignition is turned off without the park brake being set, or
- the brakes are not strong enough to hold the vehicle in place and it starts rolling.

If a door is opened without the park brake being set when the hold function is active, the horn sounds and a visual warning activates on the driver display. If the seat occupancy sensor registers an empty seat under the same conditions, the same warnings are triggered. Warnings cease when the condition that triggered the warning is corrected.

6.11 Enhanced Stability Control (ESC)

WARNING:

Electronic stability control is intended only as an aid for a conscientious and alert driver. Carefully read the information in this manual to understand this system and its limitations. ESC is not a substitute for safe driving procedures. Failure to drive safely, and use the system properly, could result in personal injury and/or death and property damage.

NOTICE:

Changing or modifying the location of the ESC sensor or reconfiguring the vehicle, such as by changing the wheelbase or adding axles, can change the performance of the enhanced stability control system and may result in product or property damage and personal injury.

An amber-colored indicator light, shown in Fig. 180, ATC/Stability Indicator Lamp, indicates that the vehicle is equipped with electronic stability system components.

The indicator light illuminates whenever the ESC system intervenes.

06/16/2016 f611337a

Fig 180, ATC/Stability Indicator Lamp

The roll stability system uses a lateral-acceleration sensor that monitors rollover risk. Shortly after a curve, lane change, or other driving maneuver that results in a rollover-risk detection, a dash warning light illuminates. The purpose is to advise the driver that the previous maneuver produced a rollover risk.

The roll stability control system, within ESC, automatically reduces engine power, applies the engine brake, and/or applies the tractor and trailer brakes when the acceleration sensor detects that the vehicle is at risk of rolling over.

ESC also has the capability of complete directional stability (yaw control) in oversteer and understeer conditions to reduce the likelihood of drift-out or jackknife. The system determines where the driver is attempting to steer the vehicle and how much brake demand is required in order to more precisely control the vehicle in an emergency situation.

ESC works by constantly comparing the driver’s intention with the vehicle's actual behavior. The system does this by monitoring systems such as wheel speed, steering angle, yaw rate, lateral acceleration, throttle position, and brake application. A central microcomputer analyzes the collected data and triggers a response to keep the vehicle on course when an unstable condition is detected.

When the system detects that the vehicle is at risk of oversteering or understeering, it applies individual tractor wheel end brakes and trailer brakes, activates the engine retarder (if equipped), and/or decreases engine power, depending on the severity. As a result, the driver has full control over the vehicle until the system detects a potential risk and intervenes accordingly. ESC operates automatically; the driver does not monitor or activate the system.

6.12 OnGuardACTIVE™ Collision Mitigation System

6.12.01 General Information

WABCO OnGuardACTIVE CMS is a forward-looking radar-based safety system. The system includes forward collision warning, adaptive cruise control (ACC), and collision mitigation.

OnGuard equipped vehicles have antilock brakes (ABS) and automatic traction control (ATC), and either roll stability control (RSC) or electronic stability control (ESC). These systems work together to enhance control of the vehicle. Depending on the situation, any of these features may apply throttle control, engine brakes, and/or service brakes, as needed.

The front-looking antenna assembly transmits radar signals to, and receives them back from, objects ahead of the vehicle. To be detected, vehicles must be within the radar field of view and provide a surface area that can reflect the radar. The distance, speed, and angle of the vehicle ahead is calculated, and the driver is warned of potentially dangerous situations. The system also warns of stationary objects to alert the driver of potential obstructions ahead in their lane.

WARNING:

The WABCO OnGuardACTIVE™ Collision Mitigation System is intended solely as an aid for an alert and conscientious professional driver. It is not intended to be relied upon to operate a vehicle. Use the system in conjunction with rearview mirrors and other instruments to safely operate the vehicle. Operate a vehicle equipped with OnGuardACTIVE in the same safe manner as if the CMS were not present.

The OnGuardACTIVE Collision Safety System is not a substitute for safe, normal driving procedures, nor will it compensate for any driver impairment such as drugs, alcohol, or fatigue.

Failure to drive safely and use the system properly could result in personal injury and/or death and severe property damage.

6.12.02 System Limitations

The OnGuardACTIVE CMS may provide little or no warning of hazards such as pedestrians, animals, oncoming vehicles, or cross traffic.

The OnGuardACTIVE CMS only brakes for lead vehicles located directly in front of your vehicle, and does not operate when vehicle speed is less than 15 mph (25 km/h).

Due to these limitations, the system:

- will not react and alert the operator to objects crossing in front of the vehicle or oncoming traffic;
- should not be relied on to track lead vehicles when traveling through a severe curve in the road. Because of this, ACC is not recommended for use on winding roads;
- should not be relied upon to track narrow objects like motorcycles, mopeds, bicycles, or pedestrians;
- should not be relied on to alert drivers to vehicles in an adjacent lane.

6.12.03 OnGuard Display Unit

The OnGuardACTIVE CMS controls are located in the display unit. The display provides visual and audible warnings and messages, as well as verification of correct system operation and faults. Menu selections are made by pressing the up and down arrows, and the MODE button. See Fig. 181,OnGuard Display Unit.

1. Mode
2. Day/Night Mode
3. Up
4. Down

Fig 181, OnGuard Display Unit

The display unit includes:

- an internal speaker

- a graphic display
- buttons to scroll and select options
- day/night display mode (second-generation only)

6.12.04 Collision Warning System (CWS)

The CWS generates audible, visual, and vibrational alerts when the following distance may result in a collision. The On-Guard display unit shows a graphic of the condition, enhanced by a screen color relevant to the intensity of the situation. See Table 27,OnGuard Display Screen Background Colors.

Table 27, OnGuard Display Screen Background Colors

Screen Color	Description
Blue	General operation; no lead vehicles detected.
Green	Lead vehicle detected.
Yellow	Following distance alert, accompanied by an audible alert.
Red	Collision warning, stationary object warning. Accompanied with audible alert.
Amber	Data Error

Table 27, OnGuard Display Screen Background Colors

If a potential collision is developing and the driver does not take action to slow the vehicle, OnGuardACTIVE's active braking feature issues a short brake pulse and de-throttles the engine.

If the driver does not take the appropriate action and a potential collision still exists, OnGuardACTIVE reduces the engine torque and applies the engine and service brakes to slow the vehicle.

The active braking application is intended only to provide early braking; the driver is still required to recognize and react to all driving situations.

If OnGuardACTIVE detects a stationary object (such as a disabled car), it will provide an audible alert followed by a vibrational alert and then brake to reduce the vehicle's speed.

Again, the active braking application is intended only to provide early braking; the driver is still required to recognize and react to all driving situations.

IMPORTANT: The cCMS and active braking are not operational at vehicle speeds below 15 mph (25 km/h).

The CWS cannot be disengaged or turned off, and is always active at vehicle speeds above 15 mph (25 km/h).

Standby

When no lead vehicle is detected, the display shows that the CMS is on and the radar is searching. See Fig. 182,CMS Standby (blue).

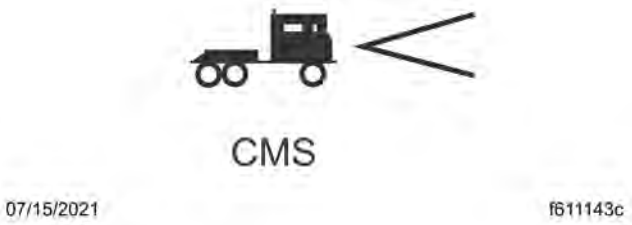

Fig 182, CMS Standby (blue)

A Vehicle is Detected

When a lead vehicle is detected in the lane ahead, the display shows that the CMS is on and the radar is tracking a lead vehicle at the speed shown. See Fig. 183,CMS Lead Vehicle Detected (green).

If the following distance between the vehicle and the lead vehicle is too close, the CMS will emit an audible alert and the display background will turn yellow. The alert will end when the vehicle speed drops below the lead vehicle speed and the following distance is increased.

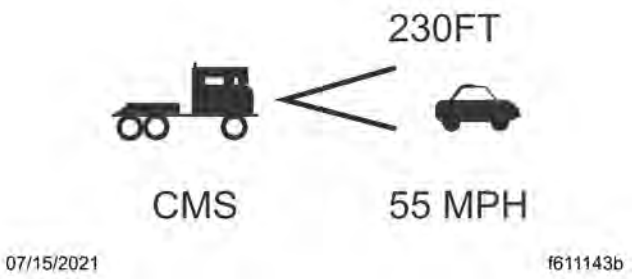

Fig 183, CMS Lead Vehicle Detected (green)

Collision Warning

When a lead vehicle is detected traveling slower than your vehicle, or the gap between them becomes too close, the CMS warns of an impending collision by emitting an urgent audible alert and displaying the collision warning symbol with a red background. See Fig. 184,CMS Collision Warning (red).

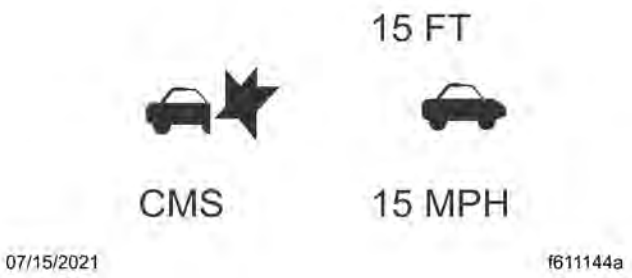

Fig 184, CMS Collision Warning (red)

6.12.05 Adaptive Cruise Control (ACC)

Adaptive cruise control (ACC) works in conjunction with conventional cruise control to maintain a minimum following distance when a lead vehicle is being tracked. The minimum following distance is maintained by automatically decelerating the vehicle using accelerator pedal, engine, and service brakes without driver intervention.

When the lead vehicle is no longer being tracked, the set cruise control speed resumes automatically.

Vehicles equipped with the WABCO OnGuard CMS and Cummins engines come standard with ACC and adaptive cruise control recovery enabled.

If ACC is not available, the cancel button must be used to engage standard cruise control.

To obtain cruise control when the adaptive cruise control function has been interrupted, press the pause button 2 times (ON-OFF-ON-OFF) and then press the set button once.

A Set or Resume command on the Set, Resume buttons will now engage the standard cruise control features.

Standby

When no lead vehicle is detected, OnGuard ACC operates similarly to conventional cruise control. The cruise control set speed is shown on the OnGuard display unit. See Fig. 185,ACC Standby (blue).

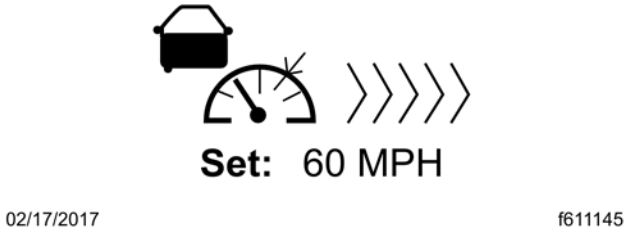

Fig 185, ACC Standby (blue)

Lead Vehicle Detected

When a lead vehicle is detected in the lane ahead, the display shows that ACC is on and the radar is tracking it. See Fig. 186,ACC Lead Vehicle Detected (green).

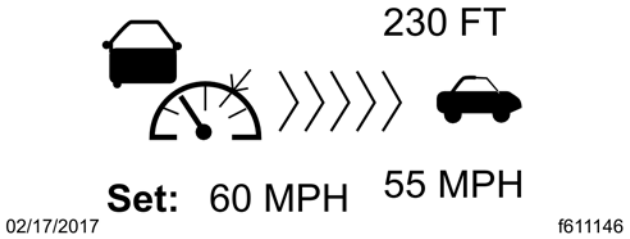

Fig 186, ACC Lead Vehicle Detected (green)

If the driver uses the accelerator pedal to override the cruise control and approach a vehicle too closely, the ACC will emit an audible alert and the display background will turn yellow. The alert will end when vehicle speed drops below the lead vehicle's speed and the following distance is increased.

NOTE: The following distance alert does not operate at speeds below 15 mph (25 km/h) or above 77 mph (124 km/h).

Collision Warning

If the lead vehicle is traveling slower than the driver's vehicle, the CMS warns of an impending collision by emitting an urgent audible alert and displaying the collision warning symbol with a red background. See Fig. 187,ACC Collision Warning (red).

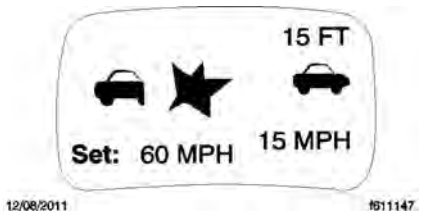

Fig 187, ACC Collision Warning (red)

If the system determines a rear end collision is imminent, it will automatically apply the brakes to reduce the vehicle's speed. The driver may also feel a short brake pulse to warn of an imminent collision. The driver must also initiate braking.

If OnGuardACTIVE detects a stationary object (such as a disabled car), it will sound an urgent audible alert, then a brake pulse, then apply the vehicle's brakes to reduce the vehicle's speed. The driver must also initiate braking.

6.12.06 Error Screens

IMPORTANT: IMPORTANT: The OnGuard collision mitigation system is not operational when an error screen is displayed. If a fault occurs or OnGuard fails to properly track a vehicle, take the vehicle in for service as soon as possible. Standard cruise control will not function with an active OnGuard system fault.

If a system fault is detected, the OnGuard display unit will immediately display an error screen as shown in Fig. 188,OnGuard Error Screen (amber). The first error code transmitted will be displayed first; additional faults (if any) can be viewed using the up or down buttons. The display does not show stored fault codes.

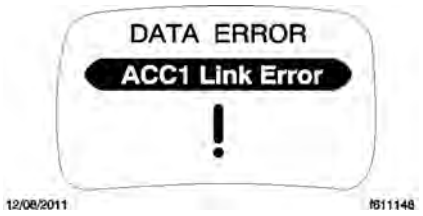

Fig 188, OnGuard Error Screen (amber)

See *OnGuard™ and OnGuardActive™ Collision Mitigation Systems Maintenance Manual* for a full list of error screens and messages. (www.meritorwabco.com).

6.12.07 Additional Features

Press the MODE button to access the OnGuard display unit additional features from the CMS or ACC main operating screen. Press the up and down arrows to scroll through each menu, then press the MODE button to select the value to be changed. In edit mode, press the up or down arrows to change a value setting, then press the MODE button to save the setting. Pressing MODE in each feature screen advances the display to the next feature.

The Display Control menu allows adjustment of the alarm volume, LCD brightness, LCD contrast, and U.S./metric unit conversion. See Fig. 189,Display Control Menu.

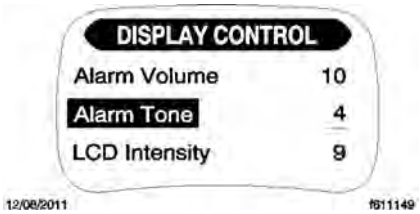

Fig 189, Display Control Menu

The component test menu provides verification of system component operation and acts as a valuable OnGuard system diagnostic tool. The header will display either COMPONENT TEST or ACC FUNCTION, depending on the software release version of the OnGuard system. The component test screen shown in Fig. 190,Component Test Menu provides access to the following components (press the up or down arrows to scroll through the menu):

brake pedal position

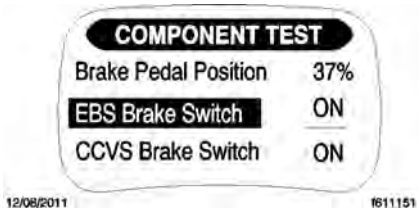

Fig 190, Component Test Menu

- EBS brake switch
- CCVS brake switch
- clutch switch
- park brake switch
- accelerator pedal position
- driveline engaged
- cruise control enable
- cruise control set speed switch
- cruise control coast switch
- cruise control resume switch
- cruise control accelerate switch
- cruise control pause switch

6.13 SafetyDirect® by Bendix

6.13.01 General Information

WARNING:
SafetyDirect by Bendix is solely intended as a support for a conscientious professional driver.

IMPORTANT: IMPORTANT: In order for the forward facing camera to operate properly, the windshield area in front of the camera must be clean, unobstructed, and not be damaged in any way.

SafetyDirect by Bendix is a fleet management system that sends vehicle safety data and automatically records five seconds of video before and after a safety event and delivers it wirelessly and in real time to the Bendix SafetyDirect portal.

6.13.02 Bendix Forward Facing Camera

If equipped, the SafetyDirect system uses the telematics systems of the vehicle and a Bendix 5G forward facing video camera shown in Fig. 191,Multipurpose Camera 2 and Bendix Camera Brackets. The Bendix camera records in color and can capture high-quality video in low light conditions.

04/29/2022 f612074

1. Multipurpose 2 Camera Bracket
2. Bendix Forward Facing Camera Bracket

Fig 191, Multipurpose Camera 2 and Bendix Camera Brackets

6.13.03 The Bendix SafetyDirect Portal

If the vehicle is equipped with the SafetyDirect system, data is sent from the vehicle's safety systems to the portal. The portal presents each driver's behavior in a 'miles between events' format with the following events recognized:

- lane departure warning,
- excessive lane departure warning,
- lane change without turn signal,
- loss of video tracking,
- lane departure warning (LDW) system disabled,
- distance/tailgate alert given,
- forward collision warning,
- collision mitigation braking,

- automatic traction control (ATC) activation,
- antilock braking system (ABS) activation,
- stability system activation,
- excessive braking,
- excessive speed on curves,
- average following distance,
- adaptive cruise control usage.

6.14 Lytx SF500 DriveCam System

6.14.01 Driver Facing Camera

WARNING:
The Lytx DriveCam event recorder is a driver aid only. It is not a substitute for a safe, conscientious driver. It cannot compensate for a driver that is distracted, inattentive, or impaired by fatigue, drugs, or alcohol. Whether or not the Lytx DriveCam event recorder is in use, it is always the responsibility of the driver to take appropriate corrective action. Never wait for the Lytx DriveCam event recorder to provide a warning or audible alert before taking measures to avoid an accident. Failure to do so can result in severe property damage, serious personal injury or death.

The Lytx SF500 DriveCam System constantly monitors driving behaviors. When risky driving behavior is detected it begins a recording, indicated by a red light in the camera. An audible alert sounds to alert the driver. The alerts can not be muted and continue to occur until the driver corrects the behavior.

Risky driving behaviors that may be monitored include:

- Driver Smoking
- Food or Drink
- Handheld Device
- Inattentive or Distracted Driver
- No Seat Belt
- Speed (company policy)
- Speed (posted speed)
- Following Distance
- Lane Departure

Vehicles equipped with a Lytx SF500 driver facing camera have a switch on the dash as shown in Fig. 192,Lytx Video Record Switch. Press the VIDEO REC switch to manually initiate a ten-second recording. An amber lamp in the switch illuminates while the recording is in process.

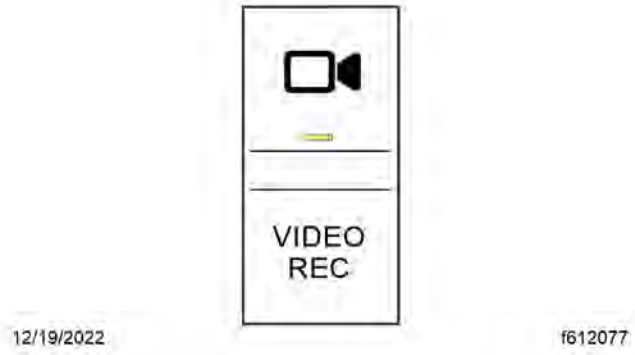

Fig 192, Lytx Video Record Switch

The Lytx SF500 DriveCam System automatically turns on a privacy mode when the parking brake is set. When the vehicle is on, it is indicated by a solid blue LED light on the Lytx camera. This mode cannot be initiated by the driver.

Videos can be viewed on the Lytx account system which requires approval to access.

For more information, access the Lytx SF500 DriveCam System User's Manual by scanning the Lytx QR code shown in Fig. 193,Lytx QR Code Link to Manual.

Fig 193, Lytx QR Code Link to Manual

6.15 Off-Road Mode

This vehicle may be equipped with a switch to activate off-road mode. This system is designed specifically for off-road use, such as driving on loose gravel or muddy terrain, and should not be used during regular on-road driving. Off-road mode can support vehicle performance by modifying the behavior of the Antilock Braking System (ABS). When engaged, off-road mode can create a buildup of material - such as dirt or snow - in front of the tires to reduce stopping distances. The performance improvement provided by this feature is dependent on terrain and driving scenario.

Engaging off-road mode automatically turns off Electronic Stability Control (ESC). This helps prevent unintended power reductions when aggressively climbing hills and turning. If left on, ESC might otherwise intervene and engage the brakes.

To activate off-road mode, press the switch, shown in Fig. 194,Off-Road Mode Switch. The switch illuminates solid red when off-road mode is engaged and a green telltale appears on the driver display, shown in Fig. 195,Off-Road Mode Engaged Alert and Off-Road Mode Pop-up, item 2. To disengage off-road mode, press the switch again. When off-road Mode is disengaged, a pop-up appears on the driver display, shown in Fig. 196,Off-Road Mode Disengaged Alert Pop-up.

NOTE: When the keyswitch is in the OFF position, off-road mode disengages.

Fig 194, Off-Road Mode Switch

1. Off-Road Mode Enabled Alert Pop-up
2. Off-Road Mode ‘ON’ Telltale

Fig 195, Off-Road Mode Engaged Alert and Off-Road Mode Pop-up

Fig 196, Off-Road Mode Disengaged Alert Pop-up

IMPORTANT: Always drive at safe speeds appropriate for terrain. While off-road mode assists with braking, it may also reduce steering effectiveness due to temporary sliding on loose surfaces. Driving too fast or without caution can cause a loss of vehicle control, increasing the risk of vehicle damage or personal injury.

IMPORTANT: Do not drive on paved roads or highways with the off-road mode function activated. Upon moving onto an improved road surface, turn off-road mode off immediately. Leaving it on can prevent the antilock braking system (ABS) system from functioning as intended for braking events at speeds below 25 mph (40 km/h), which may lead to a loss of control and increase the risk of vehicle damage or personal injury.

When driving at speeds below 6 mph (10 km/h), the ABS allows the wheels to lock as needed. Between 6 - 25 mph (10 - 40 km/h), the ABS software is adjusted to permit brief wheel lockups lasting up to 0.5 seconds. When driving above 25 mph (40 km/h), the ABS controller functions in standard on-road mode.

A pop-up titled ‘ABS Off-Road Engaged, Disengage When On-road’, shown in Fig. 195,Off-Road Mode Engaged Alert and Off-Road Mode Pop-up, item 1, appears on the driver display if off-road mode is engaged and the vehicle speed exceeds 55 mph (88 km/h). The pop-up remains active until it is acknowledged by the driver, either by disengaging off-road mode or pressing the back button on the left-hand steering wheel switch pod. In this scenario, if the vehicle is equipped with electronic stability control (ESC), both the ‘ESC Disabled’ pop-up and ESC telltale will be triggered.

The following features are disabled when off-road mode is turned on:

- electronic stability control (ESC)
- hold function (HOLD)
- hill start aid (HSA)
- Detroit Assurance features (ACC, ABA, SGA)

7.01 Cab Climate Controls 194
7.01.01 General Information 194
7.01.02 Fan Switch 194
7.01.03 Temperature Control Switch 195
7.01.04 Mode Control Switch 195
7.02 Sleeper Climate Control Panel 196
7.02.01 General Information 196
7.02.02 Fan Switch 196
7.02.03 Temperature Control Switch 197
7.02.04 Smartway Certified Parked Heater Operation 197
7.02.05 System Operation 197
7.03 Accessory Heaters 198
7.03.01 General Information 198
7.03.02 Eberspaecher (Espar) Heater 198
7.03.03 Webasto Heater 199
7.03.04 Setting the Temperature and Heater Runtime 200
7.03.05 Setting the Timer 201
7.04 Dual HVAC System 201
7.04.01 General Information 201
7.04.02 Dual HVAC Control Panel 201

7. Climate Controls

7.01 Cab Climate Controls

7.01.01 General Information

The standard cab climate controls include a fan switch with a recirculation button, temperature control switch with an A/C button, and a mode control switch. See Fig.197,Cab Climate Controls. Sleeper cabs are also equipped with a bunk override button in the center of mode control switch.

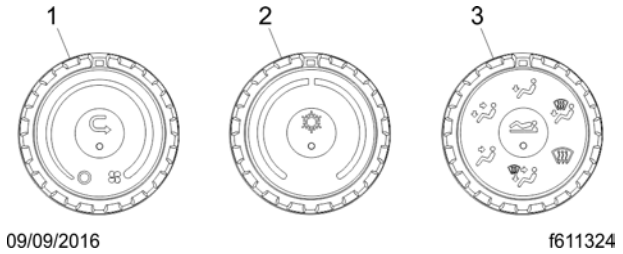

1. Fan Switch
2. Temperature Control Switch
3. Mode Control Switch

Fig 197, Cab Climate Controls

7.01.02 Fan Switch

The fan switch activates the fan, which forces outside air or recirculated air through the air outlets. The fan switch has ten fan speed settings and an OFF position. See Fig.198,Fan Switch.

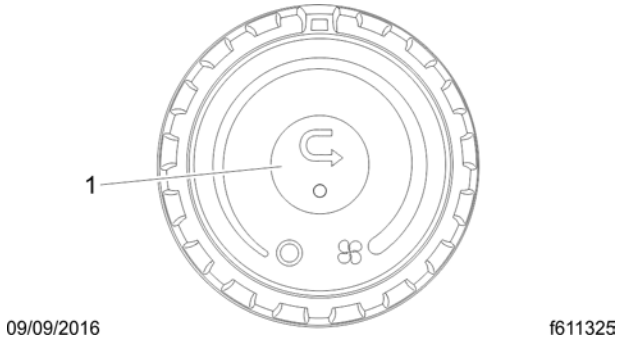

1. Recirculation Button

Fig 198, Fan Switch

To operate the fan, turn the fan switch clockwise to increase airflow; turn the fan switch counterclockwise to decrease airflow.

There is a two-second delay between the time the engine is started and the blower is operational. It can take an additional four seconds for the blower to reach high speed. The blower motor performs a self-test immediately after the engine is started, which causes the delay.

If the vehicle has optimized idle, the fan will not operate with the key in accessory mode. Optimized idle may also turn the fan off to reduce stress on the batteries. See 12.01.01 Idle Shutdown Timer for more information.

Recirculation Mode

Recirculation mode limits the amount of outside air entering the cab. Press the recirculation button to prevent dusty or smoky air from entering the cab. See Fig.198,Fan Switch. Recirculation mode can also decrease the time required to cool or heat the cab interior during extreme outside temperature conditions. An amber indicator on the recirculation button will illuminate when the recirculation mode is activated.

The recirculation button will not work when the mode control switch is in either defog or defrost modes.

NOTE: To prevent the buildup of odors or oxygen depletion inside the cab, the system switches from full recirculation mode to partial recirculation mode after 60 minutes. In extremely dusty or smoky conditions, the partial recirculation mode can be overridden by pressing the recirculation button twice to obtain full recirculation mode. This resets the 60-minute timer.

7.01.03 Temperature Control Switch

The temperature control switch is used to select the desired temperature in the cab. Turn the switch counterclockwise for cool air, or clockwise for hot air. See Fig.199,Temperature Control Switch.

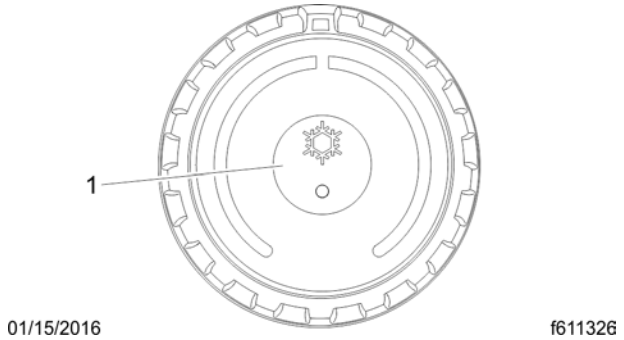

1. Air Conditioning Button

Fig 199, Temperature Control Switch

Air Conditioning Button

The air conditioner (A/C) cools and dehumidifies the air inside the cab. Press the A/C button, located in the center of the temperature control switch, to turn the air conditioner on and off. See Fig.199,Temperature Control Switch. The A/C has three modes:

- Off
- Economy (ECO); green LED
- Full A/C (maximum cooling); blue LED

The ECO mode does not cool the air temperature as low as the full A/C mode, but can provide fuel savings.

When using the climate control in full A/C mode (blue LED illuminated), after 45 minutes the system will automatically switch to ECO mode (green LED illuminated) to improve fuel economy. Full A/C can be reset by pushing the A/C button again. This resets the 45 minute timer.

7.01.04 Mode Control Switch

The mode control switch allows the driver to control the flow of air through the face outlets, floor outlets, defrost (windshield) outlets, or a combination of these outlets. See Fig.200,Mode Control Switch With Bunk Override Button.

- *Face Mode:* Directs all airflow through the face or instrument panel outlets.
- *Bi-Level Mode:* Directs the airflow equally to the face outlets and the floor outlets.
- *Floor Mode:* Directs all airflow through the floor outlets.
- *Floor/Defrost Mode:* Directs the airflow equally to the floor outlets and the defrost outlets.
- *Defrost Mode:* Directs all airflow through the defrost outlets.

- *All Mode:* Directs the airflow equally to the face, floor, and defrost outlets.

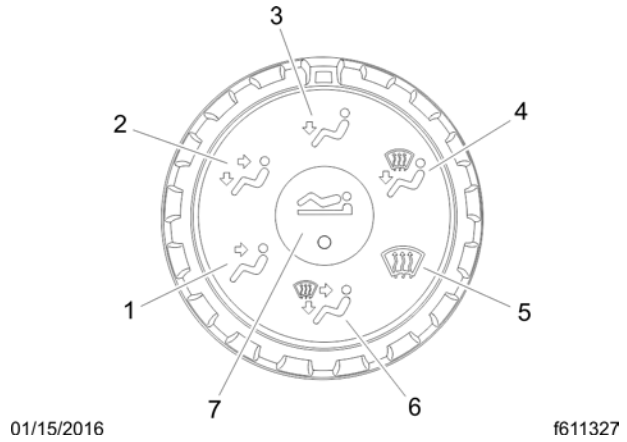

There are intermediate modes between each switch position.

1. Face Mode
2. Bi-Level Mode
3. Floor Mode
4. Floor/Defrost Mode
5. Defrost Mode
6. All Mode
7. Bunk Override Button (on sleeper-cabs only)

Fig 200, Mode Control Switch With Bunk Override Button

There are intermediate modes between each switch position.

NOTE: There are intermediate modes between each switch position.

Bunk Override Button

The bunk override button on sleeper cabs allows the driver to control the sleeper temperature and fan settings from the cab. See Fig.200,Mode Control Switch With Bunk Override Button.

Press the bunk override button to copy the current cab HVAC temperature and fan settings to the sleeper HVAC. An amber indicator will illuminate when bunk override mode is activated. When in override mode, the sleeper climate control panel automatically conforms to the fan speed and temperature settings on the cab climate panel at the time the override mode is activated. Further changes of the cab climate control settings will not alter the settings of the sleeper climate control panel.

The override mode is disabled when the fan switch or temperature control switch on the sleeper climate control panel is manually set to a different setting or when the bunk override button is pressed to the off position.

7.02 Sleeper Climate Control Panel

7.02.01 General Information

The standard sleeper climate control panel has a fan switch and a temperature control switch with an A/C button.

If the bunk override button has been activated, the override mode can be canceled by changing the sleeper fan speed or temperature setting. The climate control system will then operate from the sleeper controls.

7.02.02 Fan Switch

The fan switch activates the fan, which forces air through the air outlets. The fan switch has ten fan speeds and an OFF position. See Fig.201,Sleeper Climate Control Panel.

To operate the fan switch, turn the switch clockwise to increase airflow; turn the fan switch counterclockwise to decrease airflow.

If the vehicle has optimized idle, the fan will not operate with the key in accessory mode. Optimized idle may also turn the fan off to reduce stress on the batteries. See 12.01.01 Idle Shutdown Timer for more information.

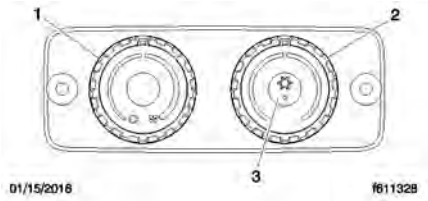

1. Fan Switch
2. Temperature Control Switch
3. Air Conditioning Button

Fig 201, Sleeper Climate Control Panel

When the cab air conditioner (A/C) is on, it is normal for the sleeper fan to operate at low speed even if the sleeper fan switch is in the off position. This is necessary to protect the evaporator in the sleeper heater and air conditioner system from freezing. At lower fan speed settings, a slight increase in airflow levels may appear at times, as the control acts to regulate the evaporator temperature.

When the park brake is set, any temperature or blower speed setting changes on the bunk HVAC unit control panel will be mimicked by the front HVAC unit. For example, if you set bunk blower speed to HI and the temperature to COLD, the front unit will also operate on HI/COLD.

When the park brake is not set, the front and rear HVAC settings function independently, unless the bunk override button is pressed, or ‘minimum AC support’ is required.

Minimum AC support is when the front unit is off and the bunk unit is set such that AC is requested (needs the AC compressor to run). In this case, the front unit will go into minimum AC support mode by operating the front blower at minimum speed to prevent the front unit evaporator from freezing up. As mentioned above, this is also true if the rear unit is off and the front unit is set such that AC is requested; the sleeper fan will operate at low speed in order to prevent the bunk evaporator from freezing up.

7.02.03 Temperature Control Switch

The temperature control switch is used to select the desired temperature in the sleeper. Turn the switch counterclockwise for cool air, or clockwise for hot air.

Air Conditioning Button

The A/C cools and dehumidifies the air inside the sleeper. Press the air conditioning button, located in the center of the temperature control switch, to turn the A/C on and off.

7.02.04 Smartway Certified Parked Heater Operation

All vehicles equipped with diesel operated coolant heaters are ‘Smartway Certified.’ The coolant heater will keep the engine coolant between approximately 150 and 180°F (65 and 82°C). Heated coolant is routed through the auxiliary HVAC heater core to allow heater-only function of the auxiliary HVAC system.

7.02.05 System Operation

1. Turn the block heater on.
2. Set the temperature dial to the desired heat setting.
3. Turn the HVAC blower on.

7.03 Accessory Heaters

7.03.01 General Information

Optional accessary heaters are available from the factory in several configurations. Familiarize yourself with the equipment on your specific vehicle, and follow the manufacturer's operating and maintenance instructions.

WARNING:

Do not operate fuel-operated heaters in an area where flammable vapors, including gasoline or diesel fumes, are present, such as at filling stations and oil depots. Turn off a fuel-operated heater and allow it shut down completely before entering an area where flammable gases or liquids are present. Heaters continue to operate for up to three minutes after being turned off.

Failure to observe these precautions could cause an explosion or fire, resulting in serious property damage, and personal injury or death.

NOTICE:

Always ensure that air inlet and outlet grilles are not restricted. Restriction of any air inlet or outlet ports could result in damage to the auxiliary heater.

IMPORTANT: IMPORTANT: To maintain reliable performance, run the accessory heater for at least 15 minutes every month to prevent fuel from degrading.

On vehicles without optimized idle, accessory heaters function when the ignition switch is in the OFF position and the cab load disconnect switch (if equipped) is in the ON position.

On vehicles with optimized idle, accessory heaters function when the ignition switch is in the ON or ACC position, the cab load disconnect switch (if equipped) is in the ON position, and the parking brake is engaged. The heater may run briefly after the ignition key has been turned to the OFF position.

IMPORTANT: Wait eight minutes after shutting down an accessory heater before turning the cab load disconnect switch (CLDS) to OFF.

NOTE: The low voltage disconnect (LVD) control prevents a heater from draining the batteries below starting voltage.

7.03.02 Eberspaecher (Espar) Heater

Go to Eberspaecher website,www.eberspacher-na.com, for additional information.

Eberspaecher Digi-Max D1000 Controller

To turn the heater on, press the POWER button. See Fig.202,Eberspaecher Digi-Max D1000 Controller. The display will indicate that heater is enabled and show the remaining runtime and the set temperature. See Fig.203,Controller LCD. The green LED indicates that the heater is on.

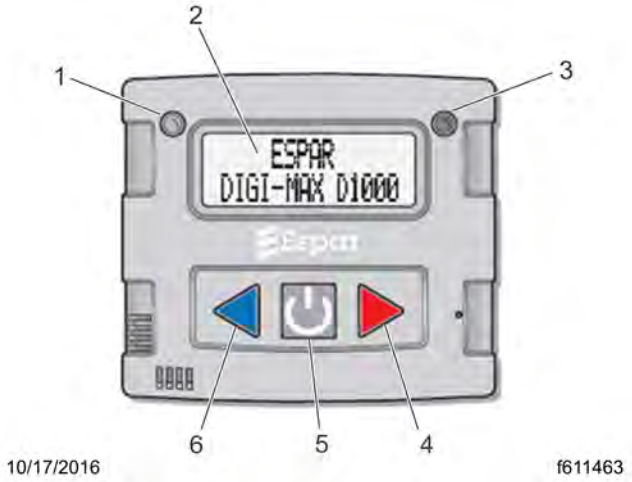

1. Heater Enabled LED (green)
2. LCD Display
3. Maintenance Required LED (red)
4. Temperature UP Button (right arrow)
5. Power Button
6. Temperature DOWN Button (left arrow)

Fig 202, Eberspaecher Digi-Max D1000 Controller

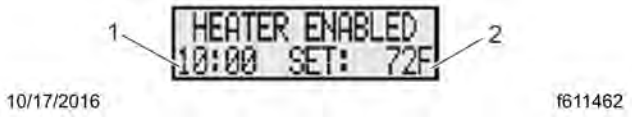

1. 1.Remaining Runtime
2. 2.Set Temperature

Fig 203, Controller LCD

To adjust the desired temperature, press the left or right arrow buttons. The left arrow button lowers the desired temperature, and the right arrow button raises it. The adjustment range is from 48 to 93°F (8 to 34°C).

To turn the heater off, press the POWER button again. The heater will initiate a 5- to 8-minute cooling cycle.

The controller has a real-time diagnostic feature, and will automatically display fault codes as they happen (e.g. 48—Check Fuel Pump). The red LED will illuminate, indicating that maintenance is required.

The controller has a programmable run timer that will display a maintenance message on the LCD after the set time limit when the heater is off. See Fig.204,Maintenance Required Message. The fault codes and maintenance messages will not prevent the heater from operating, but they reflect conditions that should be addressed promptly.

Fig 204, Maintenance Required Message

7.03.03 Webasto Heater

Webasto heaters have a heat mode and a vent mode. The fan speed is adjustable in the vent mode. The control also has a timer function, allowing a start time and/or duration to be set.

To turn the heater on, push the ON/OFF button. See Fig.205,Webasto Temperature Control. The LCD screen displays the mode, ambient temperature, set temperature, timer, and fan speed. See Fig. 206,Webasto Temperature Control Display Screens.

Go to Webasto website,techwebasto.com, for additional information.

1. Rotary Knob
2. ON/OFF Button
3. Indicator Light
4. Selection Button

Fig 205, Webasto Temperature Control

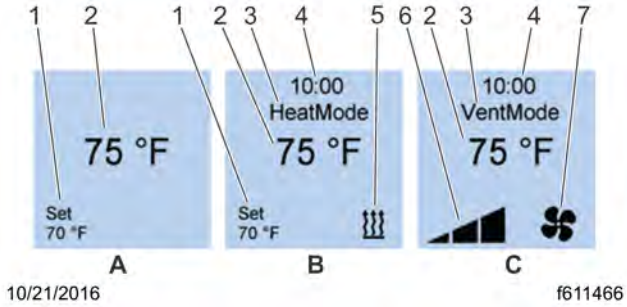

A. A.Standby Mode
B. B.Heat Mode
C. C.Vent Mode
1. Set Temperature
2. Ambient Temperature
3. Mode
4. Timed Duration
5. Heat ON Indicator
6. Fan Speed Indicator
7. Vent ON Indicator

Fig 206, Webasto Temperature Control Display Screens

7.03.04 Setting the Temperature and Heater Runtime

1. Press the selection button.
2. Using the rotary knob, select Options > Duration > Timed > Adjust Runtime to xx Hours. Confirm the adjustment by pressing the selection button.
3. Using the rotary knob, adjust the control to the desired temperature. Confirm the adjustment by pressing the selection button.

NOTE: The temperature can be adjusted while the heater is running.

7.03.05 Setting the Timer

NOTE: Settings are saved each time the selection button is pressed.

1. Press the selection button.
2. Using the rotary knob, select Timer.
3. Press the selection button. Select Edit from the sub-menu.
4. Using the rotary knob, select the day. To confirm, press the selection button.
5. Using the rotary knob, select the start time. To confirm, press the selection button.
6. Using the rotary knob, select the run time. To confirm, press the selection button.

7.04 Dual HVAC System

7.04.01 General Information

The dual HVAC system replaces the standard sleeper HVAC when optioned. Vehicles with a dual HVAC system have a larger alternator, additional batteries, and premium insulation. The dual HVAC system operates both when the engine is running and when the engine is off.

The dual HVAC system controls temperature differently than the standard sleeper HVAC system. The standard sleeper HVAC (without optimized idle) attempts to maintain vent discharge temperature at the sleeper vents, much like the main HVAC in the dash. The dual HVAC system is a zone control system which attempts to hold the bunk at a constant temperature.

The dual HVAC system has two evaporators for cooling, one supported by the engine-driven A/C system, and the other on a separate battery-powered A/C loop with a back wall-mounted condenser. When the engine is running, the dual HVAC system uses the traditional engine-supported systems for heating and cooling. When the engine is turned off, the vehicle batteries power the separate electric air conditioner loop or support a fuel-operated heater.

Operation of the dual HVAC system is regulated by the cab Progressive Low Voltage Disconnect (PLVD). The PLVD must be enabled for the dual HVAC system to be started. The PLVD will stop operation of the dual HVAC system when the voltage gets below a pre-determined threshold. Before operating the dual HVAC system, bring the sleeper interior temperature to the desired temperature with the engine running and the bunk curtain open. The dual HVAC system is designed to maintain an established comfortable bunk temperature in parked mode for up to 12 hours with the bunk curtain closed.

NOTE: The condition and charge of the vehicle batteries will directly affect the run time of the dual HVAC system. If the vehicle run time between discharges is less than eight hours, or if additional loads are added to the vehicle batteries, the dual HVAC system run time will be less than expected.

7.04.02 Dual HVAC Control Panel

The dual HVAC system control panel replaces the standard sleeper control panel in dual HVAC-equipped sleeper cabs. See Fig. 207,Dual HVAC System Control Panel. The dual HVAC system is designed to maintain a comfortable temperature inside the sleeper, and can operate in combination with the cab climate control system when the vehicle is running, or independently when the vehicle is parked.

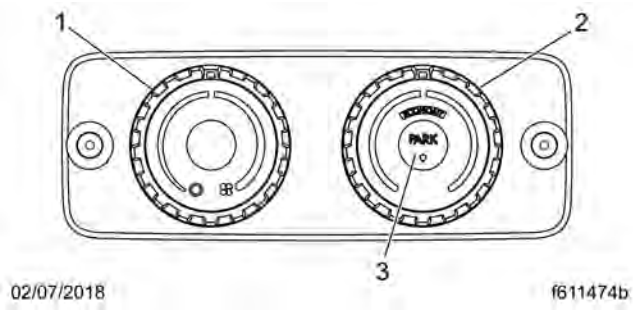

1. Fan Knob
2. Temperature Control Knob
3. PARK Button

Fig 207, Dual HVAC System Control Panel

To operate dual HVAC system, select a fan speed (other than off) and push the PARK button. Adjust the temperature control knob to the desired temperature.

The fan switch has ten fan speeds. Zero (0) is the OFF position. Turn the switch clockwise to increase airflow, and counter-clockwise to decrease airflow.

The temperature control knob controls the temperature from 65°F to 85°F (18°C to 29°C). At the minimum setting of 65°F the unit will attempt to cool the bunk to 65°F and will not allow the coolant heater to operate. At the maximum setting of 85°F the unit will attempt to heat the bunk to 85°F and will not allow the A/C cooling to operate. In between the two extremes the unit will operate in either the heating or cooling mode to achieve the set point.

On vehicles with optimized idle, interior comfort mode with dual HVAC system operates with the following parameters regarding the set point and comfort zone:

- If the bunk area reaches more than 10°F (5.5 °C) above the set point the dual HVAC system immediately requests the engine to start for bunk cooling.
- Bunk area temperature 5 to 10°F (2.8 to 5.5°C) above the set point for over twenty minutes will cause the dual HVAC system to request the engine to start for bunk cooling.
- When the sleeper area drops to more than 10°F (5.5 °C) below the set point, the comfort zone is exceeded and the dual HVAC system immediately requests the engine to start for bunk heating.
- Bunk area temperatures 5 to 10°F (2.8 to 5.5 °C) below the set point for over twenty minutes will cause the dual HVAC system to request the engine to start for bunk heating.

The mid-point position on the dual HVAC system temperature control knob is a set point of 73°F (23°C). In most conditions the mid-set point for temperature and mid-set point for fan speed will assure a stable environment. Mid-point for both controls is suggested as the initial position, with subsequent adjustment for personal preference.

IMPORTANT: Wait three minutes after shutting down the dual HVAC system before turning the cab load disconnect switch (CLDS) to OFF.

8.01 Seats, General Information 204
8.02 Standard High-Back Seat 205
8.03 National High-Back Seat 207
8.04 Sears Atlas Seat 209
8.05 Seat Belts and Tether Belts 210
8.05.01 General Information 210
8.05.02 Inspection of the Seat Belt 211
8.05.03 Seat Belt Operation 211
8.06 Sleeper Compartment Restraints 215
8.06.01 Adjustment of the Bunk Restraint 215
8.06.02 Bunk Restraint Operation 215
8.07 Steering Wheel Air Bag 216
8.07.01 Operation 216
8.07.02 Inspection and Service 217
8.08 RollTek Rollover Protection System 217
8.08.01 Identification 217
8.08.02 Operation 218
8.08.03 Inspection and Service 220

8. Seats and Restraints

8.01 Seats, General Information

Unless otherwise noted, all seat adjustments should be made while seated and before the engine is started.

Due to the maximum adjustability of mid- and high-back air suspension seats, it is possible to combine the seat back recline adjustment and the seat slide adjustment so that the seat back contacts the back wall. It is the responsibility of the driver to adjust the seat to prevent damage to the seat and the cab interior.

WARNING:

Keep hands, tools, and other objects away from the scissor points under the seats. Failure to do so could cause personal injury.

The following is a description of adjustments that can be made to various Western Star installed seats. Not all seats have all of the adjustments listed below. See Fig.208,General Seat Adjustments.

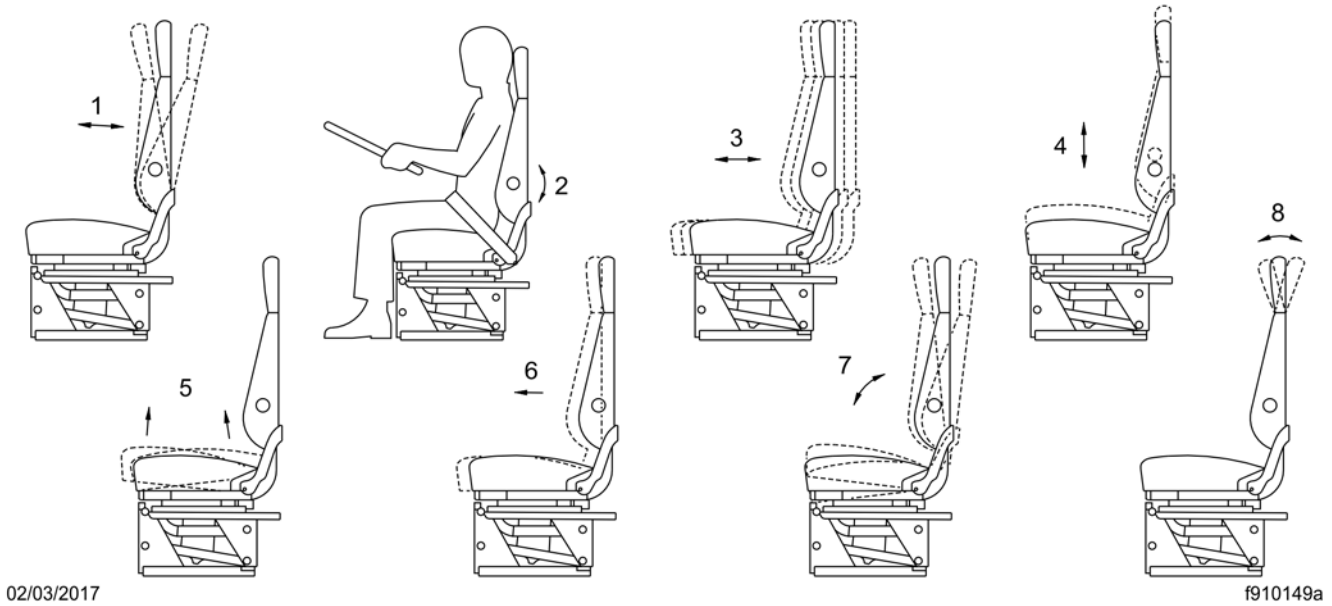

A. Backrest Tilt
B. Lumbar Support
C. Isolator Feature
D. Height Adjustment
E. Bottom Cushion Angle (fore-and-aft cushion height)
F. Fore-and-Aft Seat Slide (seat track adjustment)
G. Seat Tilt
H. Headrest Adjustment

Fig 208, General Seat Adjustments

1. Backrest Tilt: This adjustment enables the backrest to pivot forward or backward.
2. Lumbar Support: Lumbar support changes the shape of the seat back to give more or less support to the occupant's lumbar (lower back) area. This adjustment is either mechanical or air controlled, depending on make and model of the seat.
3. Isolator: This feature reduces the amount of road shock by isolating the occupant from the motion of the vehicle, and allowing the upper seat to move in a simple pendulum motion. A lockout feature is used whenever the isolator is not desired.

4. Height Adjustment: This adjustment moves the entire seat up or down. The adjustment is either manual or air-controlled, depending on the make of the seat.
5. Bottom Cushion Angle, or Fore-and-Aft Bottom Cushion Height: This adjustment enables the occupant to raise or lower the front or back of the bottom cushion. This adjustment is easier to perform when all weight is removed from the seat.
6. Fore-and-Aft Seat Slide, or Seat Track Adjustment: This adjustment moves the entire seat forward or backward on its track.
7. Seat Tilt: This adjustment allows the seat assembly (back and bottom cushions) to tilt forward or backward.
8. Headrest Adjustment: This adjustment changes the angle of the upper part of the backrest to provide head and upper back support.

8.02 Standard High-Back Seat

See Fig.209,Premium/Elite High-Back Seat Controls for seat adjustment controls. Not all models of the High-Back seat have all the adjustments listed below.

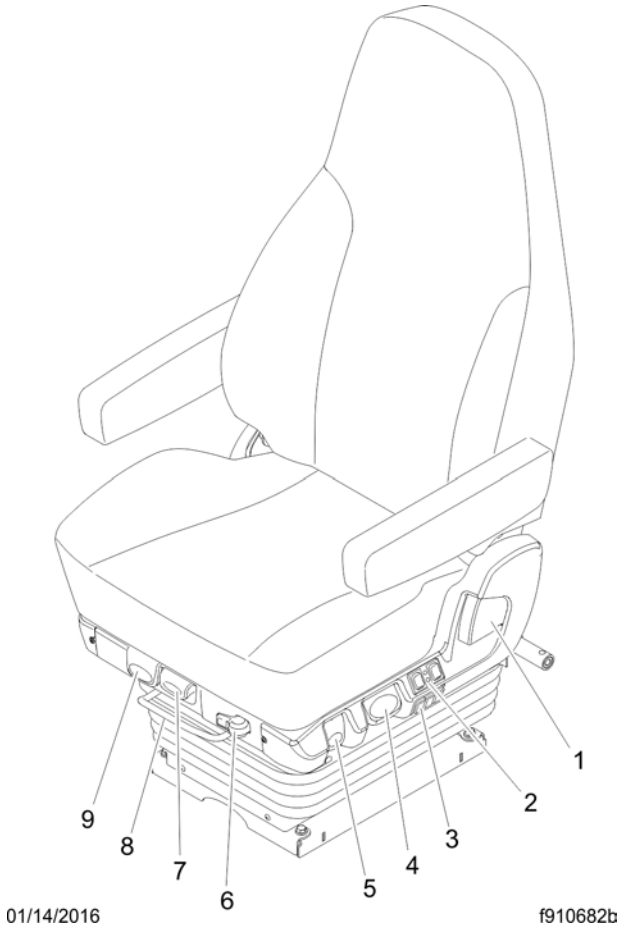

1. Backrest Tilt Handle
2. Heat/Ventilation Switches
3. Lumbar and Side Support Switches
4. Height Adjustment Lever
5. Shock Absorber Adjustment Lever
6. Fore/Aft Isolator Lever
7. Bottom Cushion Adjustment Lever
8. Seat Fore/Aft Slide Lever
9. Seat Tilt Lever

Fig 209, Premium/Elite High-Back Seat Controls

NOTICE:

On seats with heating and ventilation, do not install seat covers or cover the seat with blankets, clothing, or pillows. Blocking the air flow through the cushions can overheat and damage the seat.

1. *Backrest Tilt:* Pull the recline handle to adjust the backrest tilt.
2. *Heat/Ventilation:* Use the forward switch to turn the seat heater and ventilation on or off. To turn on the heat, push the top of the switch. To turn on the ventilation, push the bottom of the switch. To turn off the heat or ventilation, move the switch to the middle position. To adjust the heat or ventilation, Use the rear button to adjust seat heating or ventilation. Three settings are available: low, medium, and high. See Fig.210,High-Back Seat Heat/Ventilation Controls.

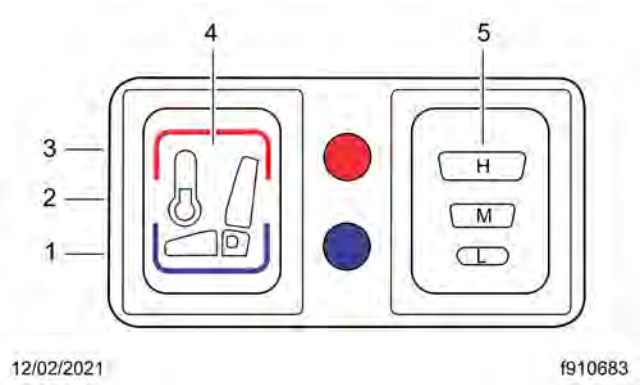

1. Ventilation ON
2. Heat/Ventilation OFF
3. Heat ON
4. Heat/Ventilation ON/OFF Switch
5. Heat/Ventilation Adjustment Switch

Fig 210, High-Back Seat Heat/Ventilation Controls

IMPORTANT: Turn off seat heating/ventilation when the seat is unoccupied.

3. *Lumbar and Side Support:* Press the forward button to adjust lower lumbar support, the middle button to adjust upper lumbar support, and the rear button to adjust side support.
4. *Height Adjustment:* Pull or push the lever to adjust seat height.
5. *Shock Absorber Adjustment:* Move the lever down to increase damping on rough roads, or up to decrease damping on flat roads.
6. *Fore/Aft Isolator:* Rotate the isolator knob to the left to lock the isolator, or to the right to allow movement.
7. *Bottom Cushion Adjustment:* Pull the lever to move the seat cushion forwards or backwards. The cushion moves 2-3/8 inches (60 mm) in 3/8-inch (10-mm) increments.
8. *Seat Fore/Aft Slide:* Lift the lever to slide the seat forward or backward. Release the lever to lock the seat in position.
9. *Seat Tilt:* Pull the lever and lean back to tilt the seat backwards. Three positions are available.

   Armrest Tilt: To adjust the armrest angle, tilt the armrest to the highest position, then down to the lowest position, then to the desired position.

8.03 National High-Back Seat

The National high-back seat comes equipped with BackCycler and RollTek. See Fig. 211,Left Side Controls of National Seat and Fig.212,Right Side Controls of National Seat for seat adjustment controls.

The BackCycler feature cyclically inflates and deflates an air bladder in the lumbar area of the seat. Used regularly during long periods of sitting, the BackCycler potentially relieves back strain.

The RollTek Rollover Protection System is described later in this chapter.

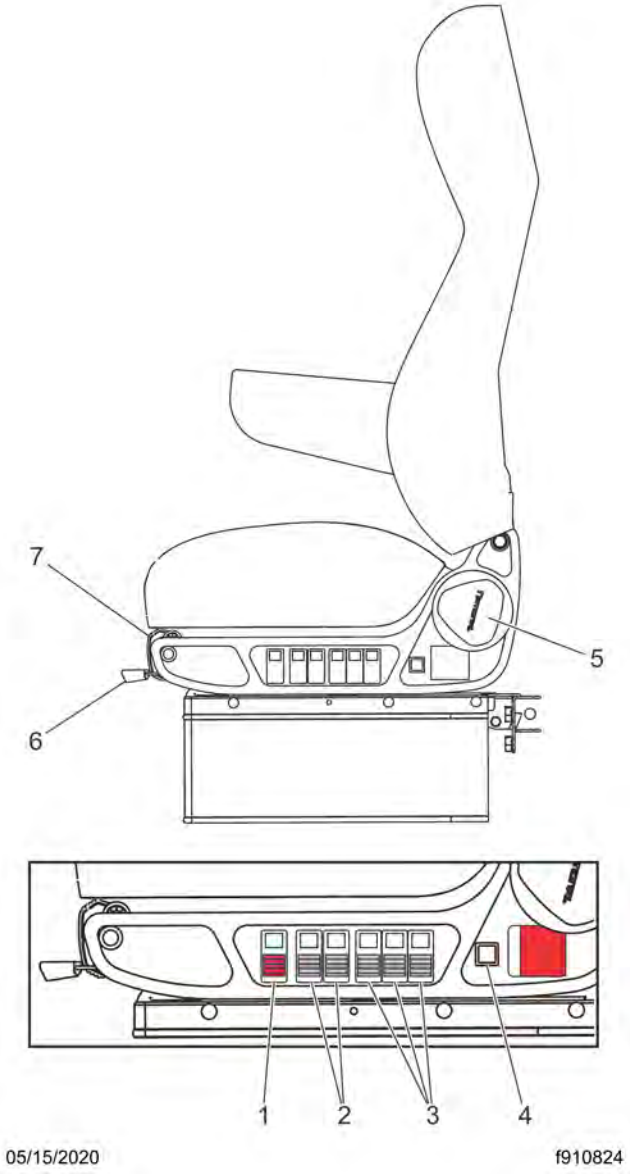

1. Seat Height Adjustment
2. Leg and Back Bolster Support
3. Three-Zone Air Lumbar Support
4. BackCycler Feature
5. Back Recline Adjustment
6. Track Slide Adjustment
7. Cushion Extension

Fig 211, Left Side Controls of National Seat

1. *Seat Height Adjustment:* Pull up on the red valve to increase air pressure and raise the seat. Push down on the valve to lower the seat.
2. *Leg and Back Bolster Support:* These two grey air valves inflate the sides of the seat cushion and the sides of the back cushion. Pull up on a valve to inflate an area of the seat and increase support. Push down on a valve to deflate.
3. *Three-Zone Air Lumbar Support:* To adjust any of the three lumbar zones, pull up on a valve to inflate and push down to deflate. The further back the valve, the higher the lumbar zone it controls.
4. *BackCycler Feature:* To operate, deflate all three lumbar support areas then press the BackCycler switch to the ON position. The Backcycler will inflate and deflate the lumbar area sections of the seat in 40 second cycles. Let the BackCycler go through two or three cycles before turning it off and reinflating the lumbar support areas to the desired comfort level.
5. *Back Recline Adjustment:* Locate the triangular knob located at the back of the seat. Rotate it rearward to increase the recline of the seat and forward to bring the seat back to an upright position. The seat can recline up to 23 degrees.
6. *Track Slide Adjustment:* The lever beneath the front of the seat cushion controls the fore-and aft position of seat. While sitting in the seat, move the track slide lever to the right, then move the seat forward or back. When the seat is in the correct position, release the track slide lever to lock it into position. The seat can move seven inches (17.8 cm).
7. *Cushion Extension:* With your weight off the seat, pull the lever located directly beneath the front of the seat cushion to pull the seat cushion forward.

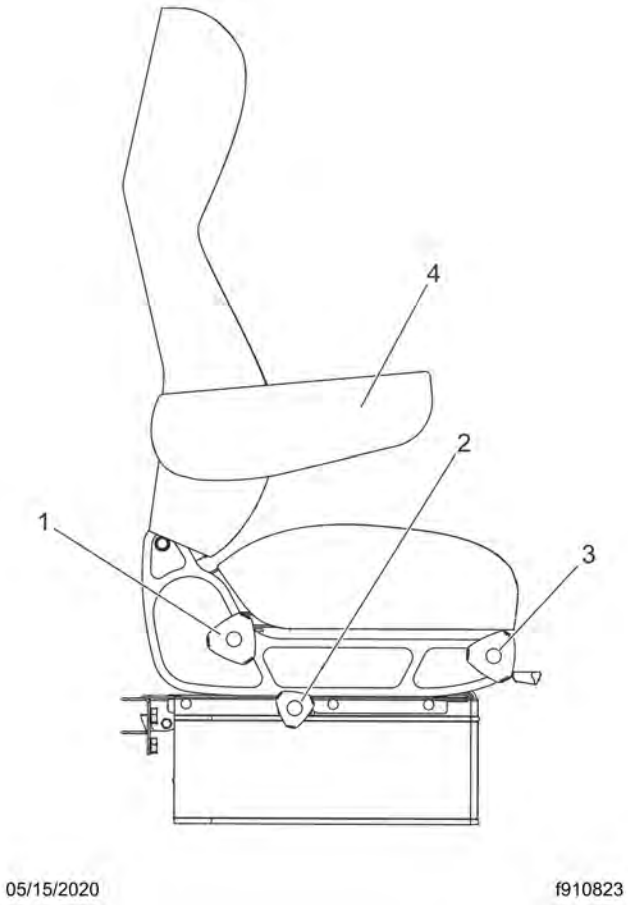

1. Rear Cushion Tilt
2. Suspension Base Isolator
3. Front Cushion Tilt
4. Armrest Adjustment

Fig 212, Right Side Controls of National Seat

8. *Rear Cushion Tilt:* With your weight off the seat, rotate the knob clockwise to raise the rear of the seat cushion to the desired height. There are three rear cushion height positions.
9. *Suspension Base Isolator:* Rotate the knob counterclockwise to enable the isolation feature. Rotate the knob clockwise to decrease the level of isolation. To turn the isolator off, turn the knob clockwise until completely tightened.
10. *Front Cushion Tilt:* With your weight off the seat, rotate the knob clockwise to raise the front of the seat cushion to the desired height. There are three front cushion height positions.
11. *Armrest Adjustment:* Rotate an arm to the full up position then rotate it fully down. Then slowly raise the arm as you listen for clicks. Each click represents one of seven armrest positions. Stop when the armrest is high enough to support your forearm in a horizontal position. Each armrest can be adjusted independently.

8.04 Sears Atlas Seat

For seat adjustment controls, see Fig.213,Sears Atlas Seat.

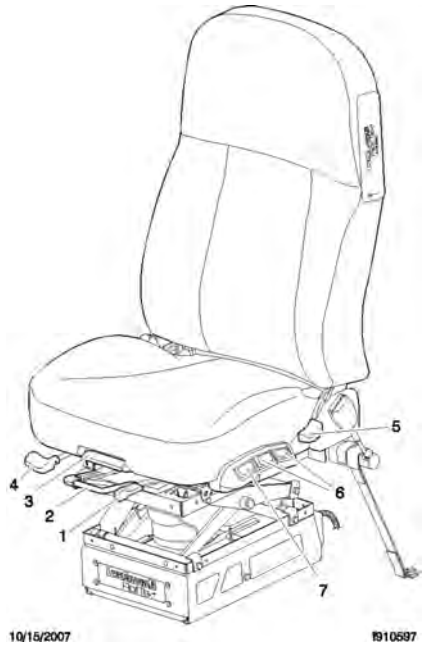

1. Isolator Lever
2. Fore/Aft Seat Slide Lever
3. Bottom Cushion Tilt Handle
4. Seat Extension Lever
5. Backrest Tilt Lever
6. Lumbar Support Switches
7. Suspension Inflation/Deflation Switch

Fig 213, Sears Atlas Seat

1. *Isolator:* Position the handle to the left to allow isolation movement. Position the handle to the right to lock-out isolation movement.
2. *Fore/Aft Seat Slide:* To adjust the fore-and-aft position of the entire seat, squeeze the fore/aft slide lock against the adjustment bail, and lift the bail up. See Fig.214,Fore/Aft Slide Adjustment, Sears Atlas Seat. Slide the seat forward or backward to the desired position. Release the bail and fore/aft slide lock, to its original position, to lock the seat in place.

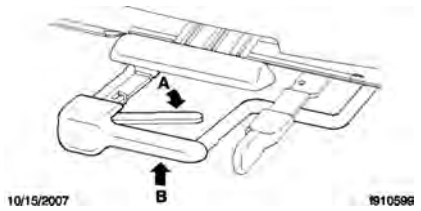

A. Squeeze the fore-and-aft slide lock against the adjustment bail.

B. Lift up the adjustment bail.

Fig 214, Fore/Aft Slide Adjustment, Sears Atlas Seat

3. *Bottom Cushion Tilt:* Lift the handle upward and move the seat cushion to the desired position. Three positions are available.
4. *Seat Extension:* Rotate the handle upward to disengage, then move the seat cushion to the desired position and release the lever. Three positions are available.
5. *Backrest Tilt:* Pull upward on the recliner handle, move the backrest to the desired position and release the handle.
6. *Lumbar Support:* Rear rocker switch: Push forward to inflate the lower lumbar bag; push rearward to deflate the bag. Center rocker switch: Push forward to inflate the upper lumbar bag; push rearward to deflate the bag.
7. *Suspension Inflation/Deflation:* Push forward on the gray rocker switch to inflate and raise the suspension; push rearward to deflate and lower the suspension.

   Armrest Angle: Rotate the control knob, located on the underside of the armrest, to set the desired angle of the armrest.

8.05 Seat Belts and Tether Belts

8.05.01 General Information

Seat belt assemblies are designed to secure people in the vehicle to reduce the possibility of injury, or the amount of injury, resulting from accidents or sudden stops. For this reason, Daimler Truck North America LLC (DTNA) urges the driver and *all* passengers, regardless of age or physical condition, to use seat belts when riding in the vehicle.

WARNING:

Always use the vehicle's seat belt system when operating the vehicle. Failure to do so can result in severe personal injury or death.

Seat belt assemblies in DTNA vehicles meet Federal Motor Vehicle Safety Standard 209, ‘Type 1’ and ‘Type 2’ requirements.

When transporting a child, always use a child restraint system or the vehicle seat belts as appropriate. To determine whether a child restraint system is required, review and comply with applicable state and local laws. Any child restraint used must comply with Federal Motor Vehicle Safety Standard 213, ‘Child Restraint Systems.’ When providing a child restraint system, always carefully read and follow all instructions pertaining to installation and usage for the child. Make certain the child remains in the restraint system at all times when the vehicle is in motion.

In addition to seat belt assemblies, tether belts are installed on suspension-type seats. Tether belts help secure the seat to the floor and are intended to restrain the seat and seat belt in case of an accident or sudden stop.

IMPORTANT: Seat belts have a finite life which may be much shorter than the life of the vehicle. Regular inspections and replacement as needed are the only assurance of adequate seat belt security over the life of the vehicle.

8.05.02 Inspection of the Seat Belt

WARNING:

Inspect and maintain seat belts. When any part of a seat belt system needs replacement, the entire seat belt must be replaced, both retractor and buckle side. Any time a vehicle is involved in an accident, and the seat belt system was in use, the entire vehicle seat belt system must be replaced before operating the vehicle. Do not attempt to modify the seat belt system; doing so could change the effectiveness of the system. Failure to replace worn or damaged seat belts, or making any modifications to the system, may result in personal injury or death.

Inspect the seat belts and tether belts.

1. Check the belt for fraying, cuts, extreme dirt and dust, or for severe fading from exposure to sunlight, especially near the buckle latch plate and in the D-loop guide area.
2. Check operation of the buckle, latch, Komfort latch or sliding Komfort latch (if equipped), web retractor, and upper seat belt mount on the door pillar. Check all visible components for wear or damage.
3. Check the seat belt and tether belt connection points and tighten any that are loose.

8.05.03 Seat Belt Operation

NOTE: Wear three-point seat belts only as described below. Three-point seat belts are designed to be worn by one person at a time. In case of an accident or sudden stop, personal injury or death could result from misuse.Fasten the seat belts before driving. Fastening a three-point seat belt while driving creates a hazard.

When engaged and used properly, the Komfort latch, shown in Fig.215,Komfort Latch, and the sliding Komfort latch, shown in Fig.216,Sliding Komfort Latch, introduce a small amount of slack into the seat belt, resulting in a more comfortable ride.

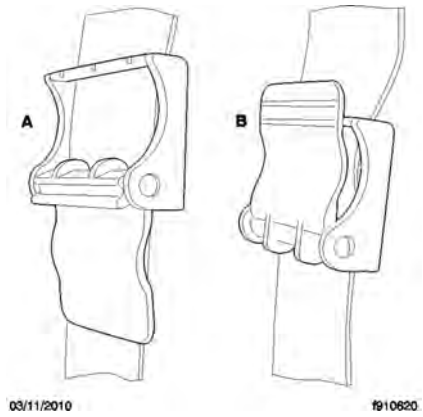

A. Disengaged B. Engaged

Fig 215, Komfort Latch

Fig 216, Sliding Komfort Latch

1. Slowly pull the link end of the seat belt out of the retractor and pull it across your lap (from outboard to inboard) far enough to engage the buckle. If the retractor locks too soon, allow the belt to retract slightly, then slowly pull it out again. See Fig.217,Three-Point Seat Belt Operation.

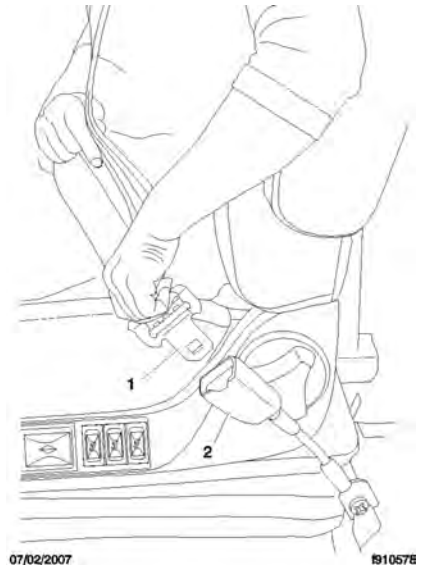

1. Latch
2. Buckle

Fig 217, Three-Point Seat Belt Operation

2. Fasten the seat belt by pushing the latch into the buckle. Listen for an audible click.
3. Tug on the seat belt to make sure it is securely fastened. If the buckle unlatches, repeat this step. If the problem continues, replace the seat belt.
4. Snug the seat belt to your waist.

WARNING:

Before activating the Komfort latch or the sliding Komfort latch, make sure the amount of slack in the shoulder strap is set as described below. Excess slack in the shoulder strap reduces the effectiveness of the seat belt, and increases the risk of injury or death in an accident.

5. Position the shoulder strap diagonally across your chest with the adjustable D-loop bracket (if equipped). The shoulder strap must be centered on your shoulder and chest, away from your face and neck. See Fig. 218, Proper Shoulder Strap Fit. If desired, engage the Komfort latch or sliding Komfort latch as follows.

   If equipped with a sliding Komfort latch, make sure that the shoulder strap is snug against your chest. Without loosening the shoulder strap, push the sliding Komfort latch switch to the 'ON' position. See Fig.216,Sliding Komfort Latch. To activate the latch lean forward until you hear a click. This will allow for approximately 1 inch (2.5 cm) of slack between your chest and the shoulder harness. Once engaged, the latch will allow you to lean forward about 5 inches (13 cm) without having to reset the latch. Leaning forward more than 5 inches (13 cm) will disengage the sliding Komfort latch, requiring it to be reset.

   If equipped with a Komfort latch, pull on the shoulder strap to lessen the pressure of the strap on your shoulder and chest. Allow no more than 1 inch (2.5 cm) of slack between your chest and the shoulder harness. More slack can significantly reduce the seat belt effectiveness in an accident or a sudden stop. While holding the belt slack, press the Komfort latch lever up, clamping the seat belt webbing as shown in Fig. 219,Adjusting Shoulder Harness Clearance, Komfort Latch and Fig.220,Locking the Komfort Latch.

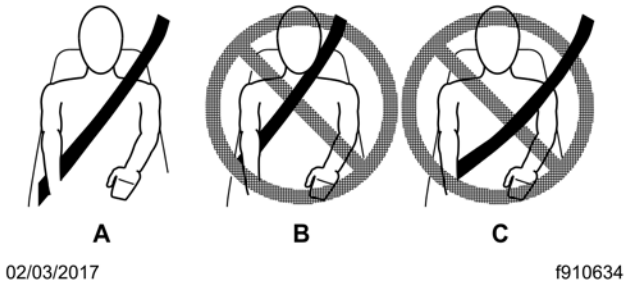

A. Correct—Belt is centered on your shoulder and chest, away from your face and neck.
B. Wrong—Belt must not rub against face or neck.
C. Wrong—Belt must not hang off shoulder.

Fig 218, Proper Shoulder Strap Fit

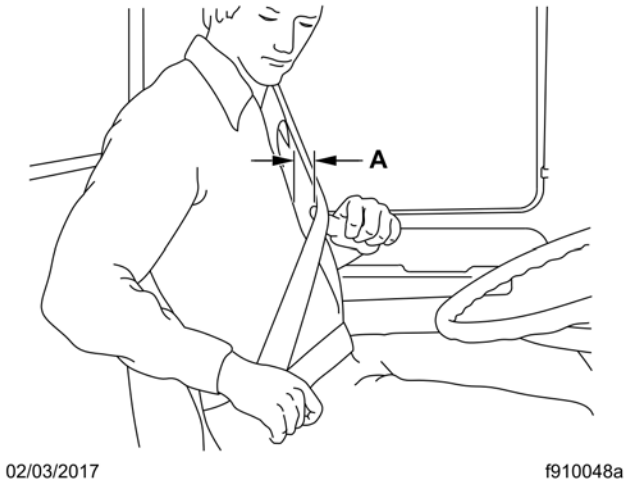

A. 1 Inch (2.5 cm) Maximum

Fig 219, Adjusting Shoulder Harness Clearance, Komfort Latch

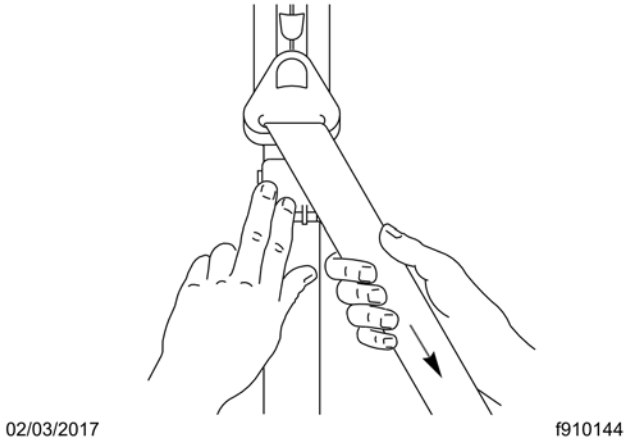

Fig 220, Locking the Komfort Latch

6. Unbuckle the seat belt and release the Komfort latch or the sliding Komfort latch as follows.

   If equipped with a sliding Komfort latch, unbuckle the seat belt, then tug on the shoulder belt to release the sliding Komfort latch, *or* press the sliding Komfort latch to the 'OFF' position, then unbuckle the seat belt.

   If equipped with a Komfort latch, unbuckle the seat belt, then release the Komfort latch by giving the shoulder belt a quick tug. If you lean forward against the shoulder belt, the Komfort latch will automatically release, and will need to be reset.

NOTE: Neither the Komfort latch nor the sliding Komfort latch need to be manually released in an emergency situation. Each will release by itself under rough road or other abnormal conditions. Make sure the seat belt is completely retracted when it is not in use.

8.06 Sleeper Compartment Restraints

8.06.01 Adjustment of the Bunk Restraint

WARNING:

Keep the upper bunk folded up and locked, and do not use the sleeper compartment while the vehicle is in motion unless a bunk restraint is installed and used. Not using the bunk restraint increases the chance of injury, or the degree of injury, to all occupants of the vehicle from accidents or sudden stops.

1. Make sure the belt is attached to the bunk support and sleeper wall.
2. To lengthen the belt, tip the link end downward and pull the link until it connects with the buckle.
3. After the belt is connected, shorten it by pulling on the loose end until the belt is snug, but comfortable. Be sure the belts are not twisted. See Fig.221,Bunk Restraint Adjustment.

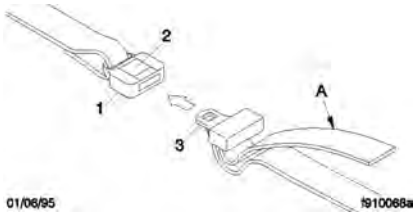

A. Pull on the loose end to shorten the belt.
1. Buckle
2. Belt Release Button
3. Link

Fig 221, Bunk Restraint Adjustment

8.06.02 Bunk Restraint Operation

1. Starting at the foot of the bunk, pull the link end of the belt up far enough to engage the buckle. See Fig. 222,Bunk Restraints.

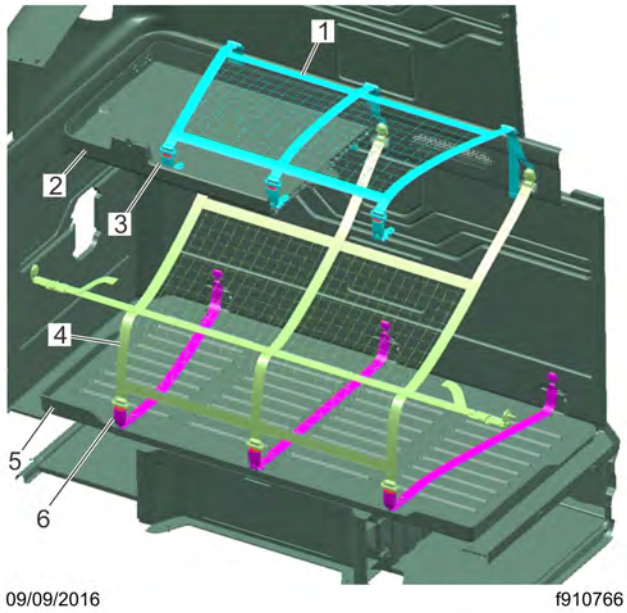

Mattresses not shown for clarity. Upper bunk pan cutaway shown for clarity.

1. Upper Bunk Restraint
2. Upper Bunk
3. Upper Bunk Buckle
4. Lower Bunk Restraint
5. Lower Bunk
6. Lower Bunk Buckle

Fig 222, Bunk Restraints

Mattresses not shown for clarity. Upper bunk pan cutaway shown for clarity.

2. Fasten the belt by pushing the link end into the buckle until it latches. Make sure that the belt is not twisted. Check the engagement by trying to pull the link out of the buckle. If they come apart, repeat this step. If the problem continues, replace the belt. Repeat steps 1 and 2 for the other two belts located in the middle and upper portion of the bunk to lock the restraint in place.
3. To release the bunk restraint, push the release button on the buckle at the head of the bunk and pull the link from the buckle.

   Repeat this step for the other two buckles to completely release the bunk restraint.

8.07 Steering Wheel Air Bag

8.07.01 Operation

NOTE: Only vehicles with the letters 'SRS' molded into the steering wheel center pad are equipped with a steering wheel air bag.

The air bag, when used with seat belts, provides additional protection to the driver in severe frontal collisions. Steering wheel air bags are designed to inflate only in severe frontal collisions. The driver and the passenger should always wear seat belts. The steering wheel air bag will activate during a collision even if the seat belts are not fastened, but the system is designed to provide protection to the occupant only when the seat belts are fastened.

WARNING:

Keep all heavy objects in the cab secured. Do not place objects on the steering wheel or between you and the steering wheel. Any such objects may cause harm during an accident. Keep your hands on the sides and lower portion of the steering wheel. Failure to follow these instructions may result in death or personal injury.

A normal seated position, with your back against the seat back and your head upright, will provide maximum protection in a collision. Since the air bag inflates with considerable speed and force, a proper seat position will help keep you a safe distance from the inflating air bag. In addition, always wear your seat belt and ensure that it is properly positioned on your body as described under 'Seat Belt Operation.'

8.07.02 Inspection and Service

WARNING:

Do not attempt to service or modify the air bag system. Unintentional or improper air bag deployment could cause severe bodily injury or death. Contact an authorized Western Star service facility for all service and maintenance.

The air bag system contains components that use combustible chemicals. Do not cut, drill, braze, solder, weld, strike, or probe the air bag components. Keep all liquids and chemicals away from air bag components.

The surface of the deployed air bag may contain small amounts of sodium hydroxide (which is a by-product of the gas generated combustion) and metallic sodium. Sodium hydroxide may be irritating to the skin and eyes. Immediately wash your hands and exposed skin areas with a mild soap and water. Flush your eyes immediately if exposed to sodium hydroxide.

The operational readiness of the air bag system is indicated by the supplemental restraint system (SRS) indicator on the dash. The SRS indicator illuminates for several seconds when the ignition is turned on, and then it goes off.

The indicator will remain on if there is a problem with the air bag system. The vehicle should be serviced if the SRS indicator does not illuminate when the ignition is turned on, or if the SRS indicator remains on.

The air bag module may contain perchlorate material; for information, seewww.dtsc.ca.gov/hazardouswaste/perchlorate. Special handling may apply; follow appropriate rules and regulations when disposing of materials.

For all service and maintenance, contact an authorized Western Star service facility.

8.08 RollTek Rollover Protection System

8.08.01 Identification

Only National seats with the RollTek module under the seat and the molded side-roll air bag cover on the upper side of the seat back are equipped with the RollTek rollover protection system; see Fig.223,RollTek Protection System Components. RollTek may be installed in one of the following configurations:

- driver seat only
- driver seat only, with an optional steering wheel frontal air bag

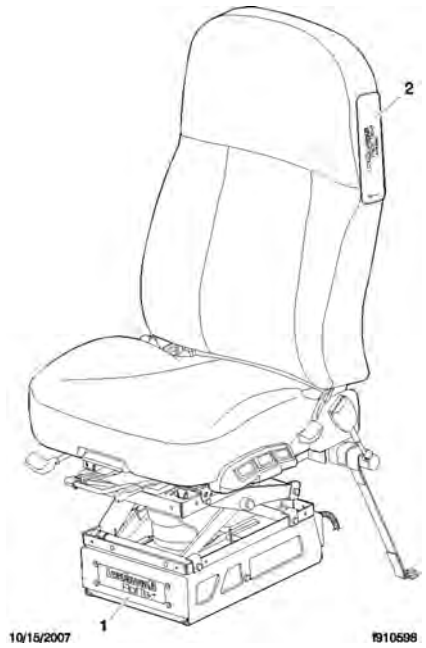

1. RollTek Module
2. Side-Roll Air Bag Cover

Fig 223, RollTek Protection System Components

8.08.02 Operation

The RollTek system, when used with seat belts, provides additional protection to the driver and passenger (if equipped with a passenger-side system) in rollover accidents. The RollTek system provides a significant increase in seat stability during a rollover. Vehicles equipped with RollTek rollover protection have a sensor mounted in the seat base that activates the side-roll air bag and seat pull-down device during a rollover.

When the RollTek module senses a rollover, the module triggers gas cylinders mounted in the base of the seat. The gas cylinders activate the power cinches that then tighten the lap and shoulder belts against the occupant of the seat and lower the seat suspension, moving the occupant down and away from the steering wheel and ceiling. The side-roll air bag deploys from the outboard side of the seat as the seat is pulled down to its lowest position. See Fig.224,Side-Roll Air Bag.

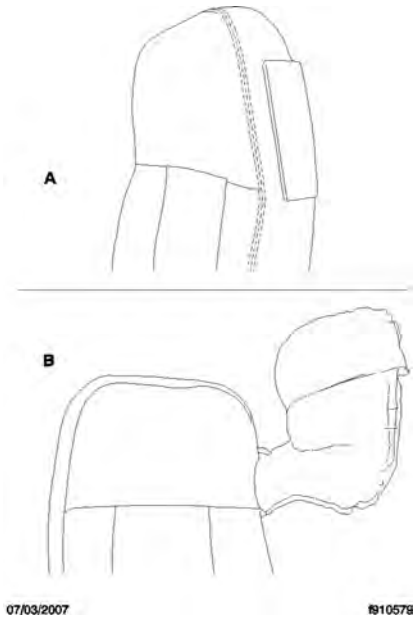

A. Side-roll air bag contained in seat.

B. Side-roll air bag deployed.

Fig 224, Side-Roll Air Bag

WARNING:

Always use the seat belts when operating the vehicle. Failure to do so can result in severe personal injury or death. Do not place infants and children in seats equipped with the RollTek system. The RollTek system is designed for adults only. Doing so could result in severe bodily injury or death. Keep all heavy objects in the cab secured. Do not place objects on the seat back or block the side-roll air bag. Objects that block the side-roll air bag may prevent proper inflation and could result in serious injury or death.

The RollTek system will activate during a rollover even if the seat belts are not fastened, but the RollTek system is only designed to provide protection to the occupant when the seat belts are fastened.

For vehicles with the RollTek system(s) only, device(s) deploy as follows:

- Rollover Crash—occupant seat belt pretensioning, seat pretensioning, and side-roll air bag at the proper time
- Frontal Crash—no devices deployed

For vehicles with the RollTek system(s) and frontal steering wheel air bag, device(s) deploy as follows:

- Rollover Crash—occupant seat belt pretensioning, seat pretensioning, and side-roll air bag at the proper time
- Frontal Crash—steering wheel air bag, occupant seat belt pretensioning, seat pretensioning, and the side-roll air bag at the proper time

8.08.03 Inspection and Service

WARNING:

Keep hands and tools away from the scissor points under the seats.

The RollTek system contains components that use combustible chemicals. Do not cut, drill, braze, solder, weld, strike, or probe any part of the RollTek system. Keep all liquids and chemicals away from the RollTek components.

Do not attempt to service or modify the RollTek system. Unintentional or improper deployment of the RollTek system could cause severe bodily injury or death. Contact an authorized Western Star service facility for all service and maintenance.

IMPORTANT: The RollTek system must be replaced after being activated. Damaged seat belts and tethers, or seat belts and tethers that were worn in an accident, must be replaced, and their anchoring points must be checked.

The operational readiness of the RollTek system is indicated by the supplemental restraint system (SRS) indicator on the dash. The SRS indicator illuminates for several seconds when the ignition is turned on, and then it goes off. The indicator will remain on if there is a problem with the air bag or RollTek system. The vehicle must be serviced if the SRS indicator does not illuminate when the ignition is turned on, or if the SRS indicator remains on.

The air bag module may contain perchlorate material; for information, seewww.dtsc.ca.gov/hazardouswaste/perchlorate. Special handling may apply; follow appropriate rules and regulations when disposing of materials.

For all service and maintenance, contact an authorized Western Star service facility.

9.01 Windows 222
9.02 Mirrors 223
9.03 Cab Amenities 224
9.04 Sleeper Amenities 225
9.04.01 General Information 225
9.04.02 Sleeper Bunks 225
9.04.03 Sleeper Curtain 226
9.04.04 Baggage Compartment Doors 226
9.04.05 Lighting 227
9.04.06 Optional Sleeper Switches 227
9.04.07 Power Outlets 227
9.04.08 Sleeper Access Door 227
9.04.09 Sliding Side Window and Tip-Out Window 228

9. Cab and Sleeper Features

9.01 Windows

The driver's door has two switches mounted in the top of the door, one to control the driver's window and the other the passenger's windows. See Fig.225,Door Switches (Driver-Side). The passenger door has a switch mounted in the top of the door to control the passenger-side window.

07/20/2020 f611331a

1. Mirror Selector Switch
2. Mirror Directional Switch
3. Mirror Heat Switch
4. Passenger-Side Window Switch
5. Driver-Side Window Switch
6. Door Lock Switch

Fig 225, Door Switches (Driver-Side)

CAUTION:

There is no anti-pinch protection when the window is almost closed. Be sure to clear all objects from the window before closing.

The window switches have three positions: lower window, neutral, and raise window. Press forward on the switch to lower the window. Hold the switch down in the forward position for approximately one second to activate the express function; the window will continue to roll down after the switch is released. Press the switch rearward to raise the window.

9.02 Mirrors

The standard outside mirrors are mounted on the door frame. The power mirrors are controlled with a left-hand or right-hand mirror selector switch and a directional switch. See Fig.226,Door Switches (Driver-Side) Select the left or right mirror using the selector switch then press the directional switch arrows to adjust the mirror.

The outside door mirrors can be heated to keep them clear of fog, frost, and ice. To heat the mirrors, press the mirror heat switch on the door outward. When the mirror heat switch is on, the switch's amber indicator light illuminates.

In vehicles equipped with heated hood-mounted auxiliary mirrors, turning on the mirror heat for the primary mirrors activates the heat in the auxiliary mirrors.

In vehicles equipped with LED headlights with a heated lens system, turning on the mirror heat will activate the heated lenses. For full details on this feature see .

If the vehicle has optimized idle, mirror heating will not operate with the key in accessory mode, or if the optimized idle feature turns mirror heating off to reduce stress on the batteries. Refer to 12.01.01 Idle Shutdown Timer for more information.

1. Mirror Selector Switch
2. Mirror Directional Switch
3. Mirror Heat Switch
4. Passenger-Side Window Switch
5. Driver-Side Window Switch
6. Door Lock Switch

Fig 226, Door Switches (Driver-Side)

9.03 Cab Amenities

Western Star vehicles are available with many optional features. The following are some of those options.

09/18/2020 f611848

1. Dash Tray / Optional CB Location
2. USB Port
3. Power Outlets
4. Map Pocket
5. Coin Tray
6. Cup Holders
7. Storage Cup

Fig 227, Dash Amenities

Cab Privacy Curtain

The cab privacy curtain provides coverage for the side windows and windshield.

Cup/Thermos Holder

A thermos holder inboard of the driver's seat is available.

Three cup holders and a storage pocket are molded into the center dash

Lighting

See 5.01 Ignition Switch for detailed information regarding lighting controls.

Dash Power Outlets

Depending on options selected, the dash provides up to two power sources and a tray:

- Two 12V power outlets and a coin tray
- One 12V power outlet and a lighter with ashtray

Radio and CB

The standard radio is mounted in the center dash panel and consists of AM/FM/WB tuner with Bluetooth, a USB port, and auxiliary inputs.

A pole antenna can be mounted on the right-hand side mirror or a thin-film antenna can be mounted on the right-hand side of the cab roof.

The CB is typically installed in the overhead console. An optional hot mount may be installed on top of the dash for fleet CB radios.

Storage

Large storage pockets are molded into the lower portion of the driver and passenger doors. A map pocket is located on the passenger side of the center dash and a small storage cup is located on the driver side of the center dash.

If equipped, storage compartments are located in the overhead console above the windshield and the cab doors.

For compartments with doors, open the door by pulling outward on the latch. The doors are hinged at the top, and will swing upwards.

Windshield

The standard windshield is solar glass designed to block UV rays and reduce glare and heat loss.

Windshield options include impact resistant solar glass, or an impact resistant solar glass heated windshield.

If equipped with a heated windshield, the vehicle will have windshield heat dash switch, shown in Fig. 228,Windshield Heat Switch. When active, the windshield heat switch icon will illuminate green. To turn off the windshield heat, toggle the switch down.

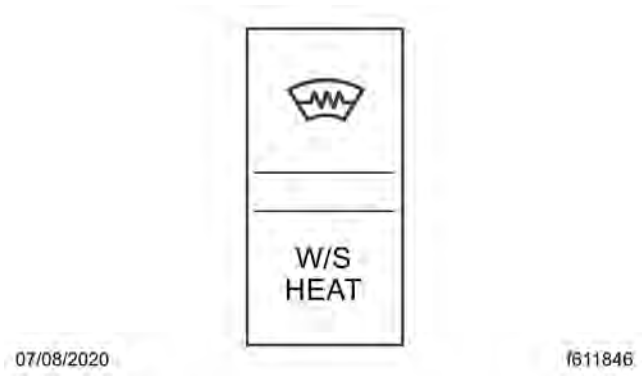

Fig 228, Windshield Heat Switch

If the windshield heat switch is activated, the windshield heat will turn on when the ambient air temperature is at or below 28°F (-2°C). The headlight heating system will also activate; for full details on this feature see 21.01 Headlights.

9.04 Sleeper Amenities

9.04.01 General Information

Sleepers are available with many optional features. The following are some of those options.

NOTE: See 7.01.01 General Information for detailed information regarding sleeper climate controls.

9.04.02 Sleeper Bunks

NOTE: Make sure bunks are locked in place before sleeping or driving the vehicle.

Sleeper cabs can come with a lower bunk, an upper bunk, or both.

Lower bunk configurations include a bed with a storage compartment or, in 72 inch sleepers, a pull-down bed with two foldable seats and a table.

The release lever to unlock the storage bed is centered under the bunk. Press the lever to the right and pull up on the bunk to access the storage compartment. Pushing the bunk back into its original horizontal position will cause the bed latches to lock.

Setting up the pull-down bed, shown in Fig.229,Pull-Down Bed With Lounge, consists of the following steps.

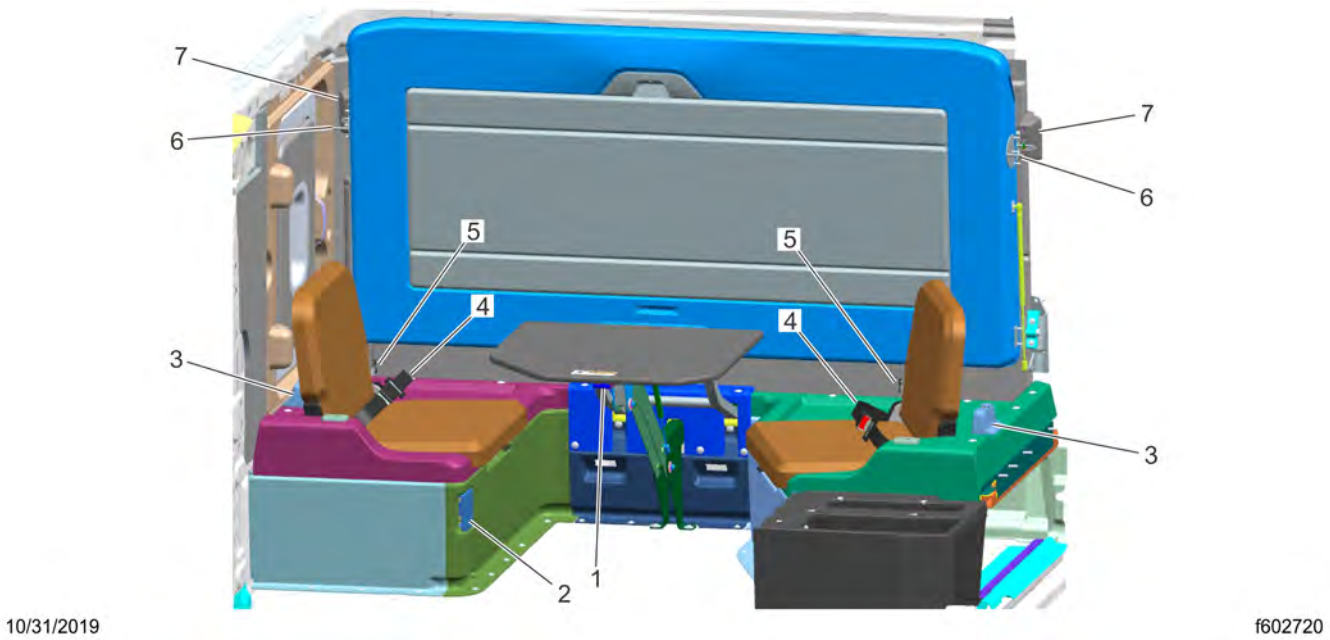

1. Table T-Pull Handle
2. Pull-Down Bed Release Latch
3. Lower Bunk Locks
4. Seatbelts
5. Seat Latches
6. Lower Bunk Latch Pins
7. Upper Bunk Latch Pins Engaged in Upper Locks

Fig 229, Pull-Down Bed With Lounge

NOTE: To avoid damaging the upholstery, unlatch and move the seatbelts to the side before folding the chairs closed.

1. Pull forward on the seat latch while lowering the chair back toward the seat, and fold it down.
2. Pull the table t-pull handle forward, then push down on the top of the table until it is at the same level as the folded seats.
3. Pull out the bed release latch until you feel a release of tension. See Fig.229,Pull-Down Bed With Lounge, item 2.
4. Grasping the edge of the bed, pull it down until the lower latch pins engage in the lower bunk locks.

9.04.03 Sleeper Curtain

Sleeper curtains are included with all sleepers and work to block out light and help regulate temperatures in the sleeper compartment.

9.04.04 Baggage Compartment Doors

The baggage compartment doors are intended as a convenient means to stow or remove items under the bunk. The baggage compartment doors can be opened from the inside by using the pull cable located near the rear edge of the cab door opening. Pull the cable handle labeled 'BAGGAGE' forward to open the door.

IMPORTANT: The baggage compartment doors have two-stage latching. When closing the doors, ensure that they are completely latched to prevent wind noise and water intrusion.

9.04.05 Lighting

See 5.01 Ignition Switch for detailed information regarding lighting controls.

Lighting controls in the sleeper control panel will control lights in the bunk area.

9.04.06 Optional Sleeper Switches

Some optional switches available in the sleeper control panel include:

- Comfort Lock: lock and unlocks the cab doors.
- Sleeper Mute: mutes or unmutes the speakers.

9.04.07 Power Outlets

Two power outlets that supply 12V power for accessories are located at the base of the bunk in sleepers. An additional 12V power outlet is included in the sleeper panel on 60" and 72" sleepers cabs.

Options include up to four 12V outlets: up to three 12V power outlets in the bunk area or up to two 12V outlets in the sleeper panel. The sleeper control panel can also be outfitted with one 12V power outlet and a USB charging outlet.

An AC 120V cab wiring and AC outlet with different options are also available.

See Fig.230,Sleeper Control Panel for a typical sleeper panel with power outlets.

08/18/2020 f602745a

1. Power Outlets
2. Temperature Sensor
3. HVAC Controls
4. Light Switches
5. Sleeper Mute
6. Comfort Lock

Fig 230, Sleeper Control Panel

9.04.08 Sleeper Access Door

The sleeper access door is not intended for entry or exit. The door is intended only as a convenient means to stow or remove personal belongings in the sleeper area. See Fig.231,Sleeper Access Doors. The sleeper access door can be opened from inside the cab using two different methods. The primary method is the pull cable located near the lower-rear edge of the cab door opening. Pull the cable handle labeled 'ACCESS' forward to open the sleeper door. The secondary method is the black knob located at the upper rear edge of the sleeper door opening. Pull this knob down to open the sleeper door.

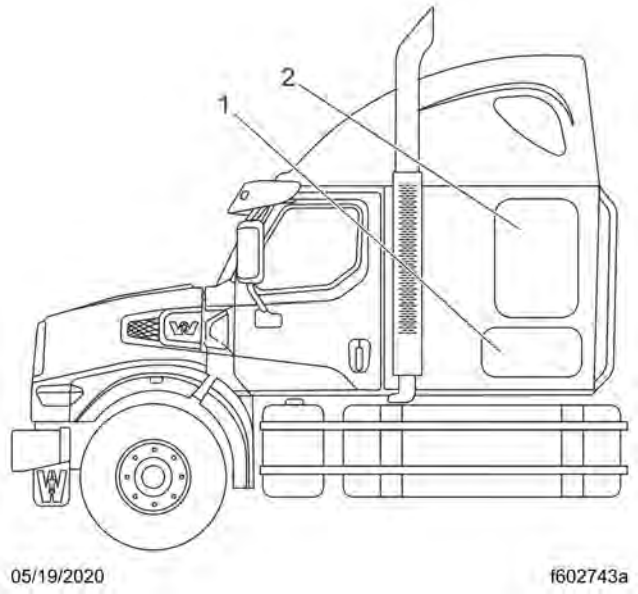

1. Luggage Door
2. Sleeper Access Door

Fig 231, Sleeper Access Doors

IMPORTANT: The sleeper access doors have two-stage latching. When closing the doors, ensure that they are completely latched to prevent wind noise and water intrusion.

9.04.09 Sliding Side Window and Tip-Out Window

The lower section of the sliding side window moves vertically and may be locked in multiple positions. Two spring-loaded tabs are located at the top of the sliding section. To adjust the window, pull both tabs toward the center of the glass and move the sliding section to the desired height. Release the tabs to lock the sliding section.

The tip-out window is designed to bring fresh air into the sleeper area. It can be opened and closed by turning the knob at the bottom center at the inside of the window. Make sure the window is closed before driving the vehicle.

10.01 System Overview 230
10.01.01 System Overview 230
10.02 Vehicle Power Distribution 233
10.02.01 General Information 233
10.02.02 Cab Electrical and Electronic Components 235
10.03 Cab Load Disconnect Switch 237
10.03.01 Cab Load Disconnect Switch, General Information 237
10.03.02 Battery Contactor Control Board 238
10.04 Emergency Power 240
10.05 Powernet Management 241
10.06 Optional Power Systems 241
10.06.01 Shore Power 241
10.06.02 Inverter/Charger 241

10. Electrical System

10.01 System Overview

10.01.01 System Overview

Your Western Star has a multiplex electrical system. By transmitting multiple electronic messages through the same wire, a multiplex system reduces the number of interconnected wires, allows for more precise control of the electrical system, and makes it easer and quicker to diagnose electrical faults and add optional equipment.

In addition, the wiring harnesses are developed for the maximum number of options, meaning that space for additional wires is available within the wiring harness regardless of the number of optional features on the vehicle. This design provides a cleaner main harness and is meant to eliminate the need for wiring overlays

Traditional power distribution devices are replaced with electronic control modules (ECUs). These coordinate power to outputs such as lighting, displays, gauges, and indicators and control power distribution by monitoring inputs such as sensors and switches. Power is supplied by the vehicle power distribution module (VPDM).

The ECUs also continuously monitor the status of all input devices and transmit messages over multiple control area networks (CANs), reducing the number of sensors required for operation.

The Instrumentation Control Unit (ICU) and Fault Codes

NOTE: Some non-critical faults may be suppressed and will not appear during an instrumentation control unit (ICU) self-check.

The majority of electrical and electronic issues on the vehicle will have an associated fault code, which will be displayed on the ICU.

If the ICU receives active fault codes during the ICU self-check, it displays them one after the other until the parking brake is released or the ignition is turned off. Once the parking brake is completely released, the ICU displays alerts until acknowledged. See Fig.232,ICUC Active Faults Alert Screen. If there are no active faults, the ICU displays the home screen after the self-check completes.

08/25/2016 f611438

Fig 232, ICUC Active Faults Alert Screen

When there is an active vehicle fault code, a popup will appear on the ICU message screen.

To access fault codes in the ICU:

1. Use the buttons on the left-hand steering wheel to navigate to the wrench icon and press OK.
2. ECUs with active faults will have an exclamation point next to them. See Fig. 233,Electronic Control Unit (ECU) List in the ICUC. Use the down arrow to select the affected ECU from the list, then press OK

   See the ECU acronyms list for the full names of acronyms on the ICU screen. See Table.28,ICU Electronic Control Unit Acronyms.

08/25/2016 f611439

Fig 233, Electronic Control Unit (ECU) List in the ICUC

3. Locate the code to troubleshoot from the list of active fault codes, then press OK to access the information screen. See Fig.234,Information Screen for an Active Fault Code.

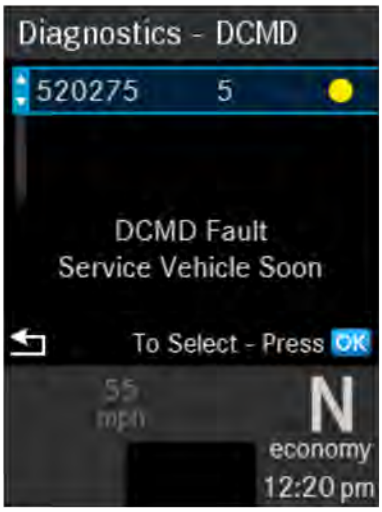

08/26/2016 f611442a

Fig 234, Information Screen for an Active Fault Code

4. Press OK again to access additional information. See Fig.235,Additional Information for the Fault.

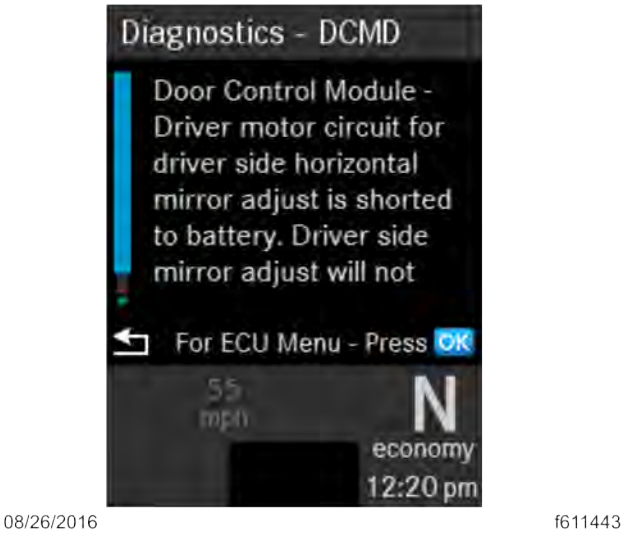

Fig 235, Additional Information for the Fault

Table 28, ICU Electronic Control Unit Acronyms

ICU Electronic Control Unit Acronyms			
ABS	Antilock Brake System	**ICU**	Instrumentation Control Unit
ACM	Aftertreatment Control Module	**MCM**	Motor Control Module
CGW	Central Gateway	**RDF**	Radar Front End
CPC	Common Powertrain Controller	**SAS**	Steering Angle Sensor
DCMD	Door Control Module, Driver	**SSAM**	Single Signal Detect and Actuation Module
DCMP	Door Control Module, Passenger	**TCM**	Transmission Control Module
HVCF	Heating/Ventilation/AC Front (HVAC)	**TPMS**	Tire Pressure Monitoring System
HVCP	Heating/Ventilation/AC, Auxiliary (HVAC)	**VRDU**	Video Radar Decision Unit

Table 28, ICU Electronic Control Unit Acronyms

10.02 Vehicle Power Distribution

10.02.01 General Information

The vehicle power distribution system provides battery power to the electrical and electronic systems.

The following components make up the vehicle power distribution system:

- Battery Cable Access (BCA)
- Vehicle Power Distribution Module (VPDM)
- Optional Cab Load Disconnect Switch (CLDS)

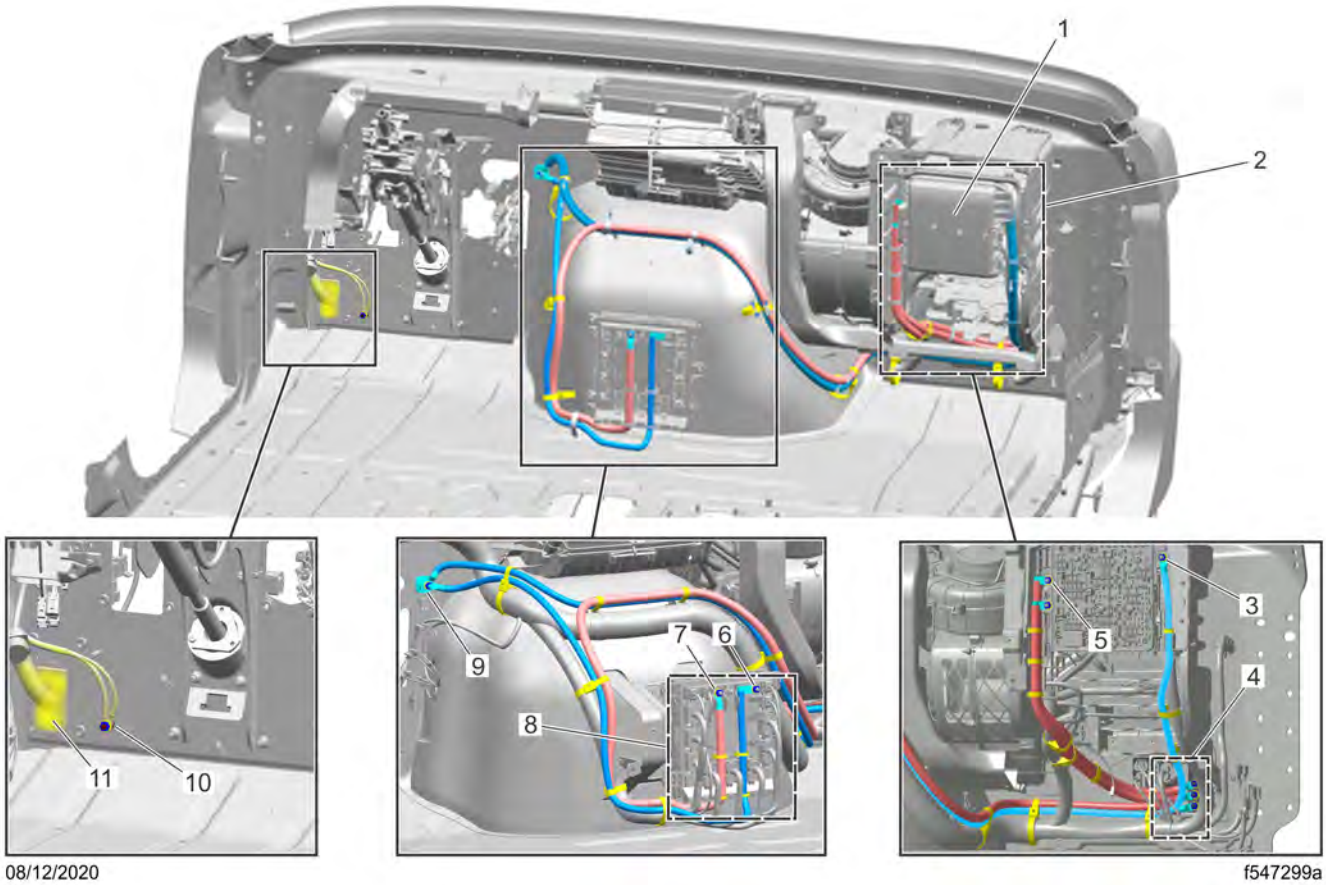

1. Vehicle Power Distribution Module (VPDM)
2. Electronics Bay
3. VPDM Ground
4. Battery Cable Access (BCA) Front Wall Pass-Through
5. VPDM Power
6. sSAM Ground
7. sSAM Power
8. Single System and Actuation Module (sSAM)
9. Front Wall Cab Ground Pass-Through Stud
10. Front Wall Interior Ground Stud
11. Pass-Through Bulkhead Connector

Fig 236, Cab Power Distribution and Component Location Overview

Vehicle power is supplied by the batteries to the battery cable access (BCA) box. The BCA front wall pass-through is the primary interface through which battery power gets transferred from outside the cab to the inside. It is located on the passenger side of the engine compartment front wall. See Fig.236,Cab Power Distribution and Component Location Overview.

On vehicles equipped with an optional high current receptacle and/or optional inverter, the BCA will have circuit protection and power cables supplying those devices. Fuse locations will depend on the vehicle and will be outlined on a label on the BCA cover. For an example, see Fig.237,Example Fuse Labeling on BCA Cover.

08/14/2020 f547313

Fig 237, Example Fuse Labeling on BCA Cover

The power supplied by the batteries goes to the vehicle power distribution module (VPDM) and the Single System and Actuation Module (sSAM).

The VPDM is a fuse and relay power distribution box. It provides power and circuit protection for powertrain needs, cab functions, and various stand alone modules. It also supplies power to the emergency power supply circuits in the event of a module failure. The VPDM is located in the vehicle electronics bay, behind the passenger-side dash panel. See Fig. 236,Cab Power Distribution and Component Location Overview.

Depending on a vehicle's specifications, the fuses and relays installed and their locations can vary. Each VPDM cover is illustrated with an image of the fuse and relay layout for that vehicle. See Fig. 238,VPDM Inside Cover Map of Fuses and Relays for an example of VPDM cover map of fuses and relays.

Fig 238, VPDM Inside Cover Map of Fuses and Relays

Both the VPDM and the sSAM are grounded at the cab-side front wall. See Fig. 236,Cab Power Distribution and Component Location Overview.

On vehicles equipped with a cab load disconnect switch (CLDS), the BCA houses a contacting device that can open to shut off power to high current loads.

The cab load disconnect switch (CLDS) is an optional switch that can be used to open (turn OFF) or close (turn ON) circuits between the battery and the battery cable access box (BCA). It is described more fully later in this chapter.

10.02.02 Cab Electrical and Electronic Components

Pass-Through Bulkhead Connector

The pass-through bulkhead connector is where the interior dash harness connects to the exterior chassis harness. This provides a disconnect point for harness service, testing, and replacement. It is located on the driver-side front wall of the truck. See Fig.239,Cab Power Distribution and Component Location Overview.

Single System and Actuation Module (sSAM)

The sSAM is the primary module in the electrical system, combining chassis power distribution, cab power distribution, and modular switch functions into a single ECU. The sSAM does **not** contain fuses or relays.

The sSAM reads input information from sensors, switches, and databus messages, and drives output and controller area network (CAN) messages. The sSAM is located near the center of the cab behind the lower dash panel. See Fig. 239,Cab Power Distribution and Component Location Overview.

Electronics Bay

The electronics bay contains the electronic control units that control different vehicle features. It is located on the passenger-side of the cab behind the dash panel. See Fig.239,Cab Power Distribution and Component Location Overview for its location in the cab and Fig.240,Electronics Bay for the location of ECUs in the bay.

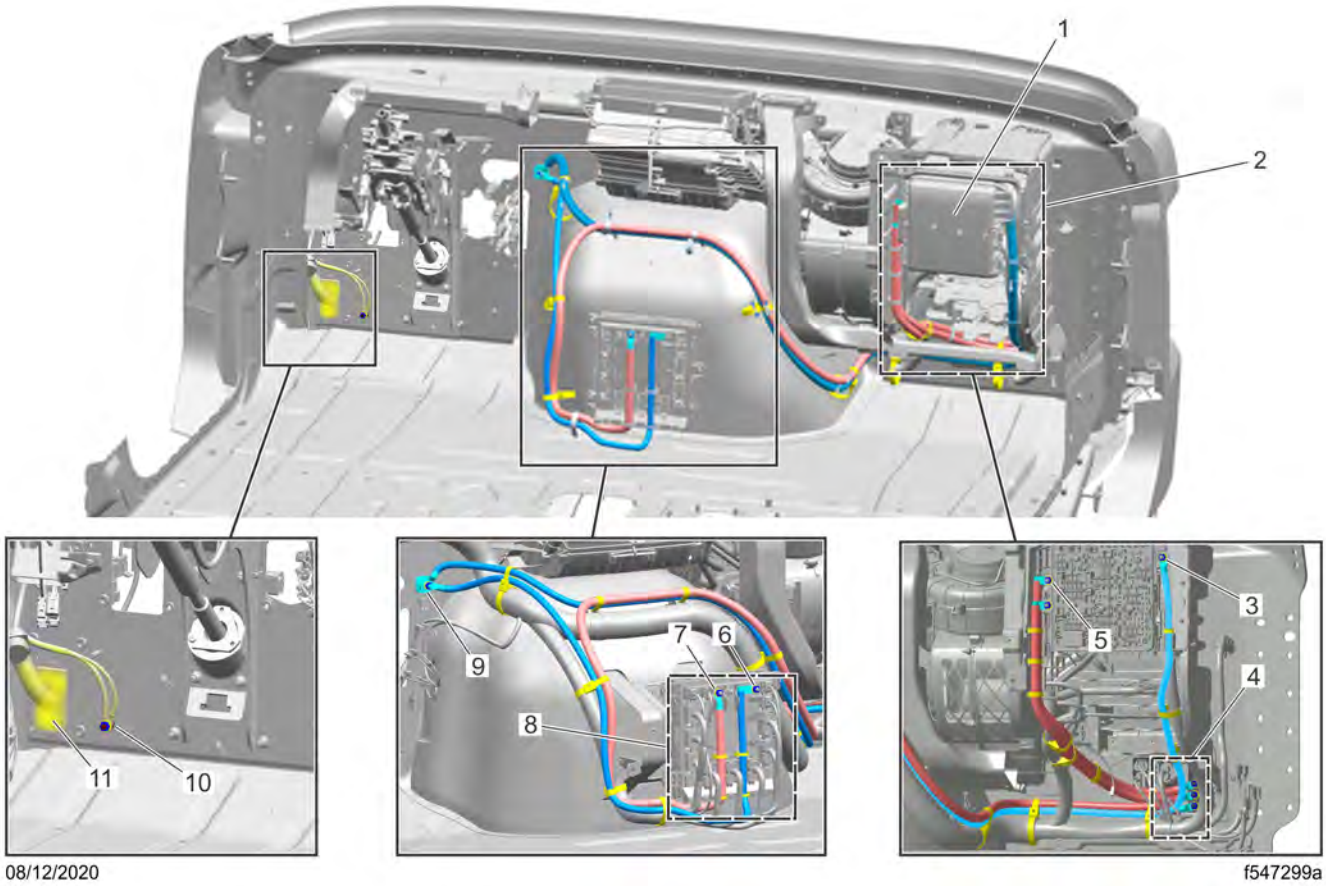

1. Vehicle Power Distribution Module (VPDM)
2. Electronics Bay
3. VPDM Ground
4. Battery Cable Access (BCA) Front Wall Pass-Through
5. VPDM Power
6. sSAM Ground
7. sSAM Power
8. Single System and Actuation Module (sSAM)
9. Front Wall Cab Ground Pass-Through Stud
10. Front Wall Interior Ground Stud
11. Pass-Through Bulkhead Connector

Fig 239, Cab Power Distribution and Component Location Overview

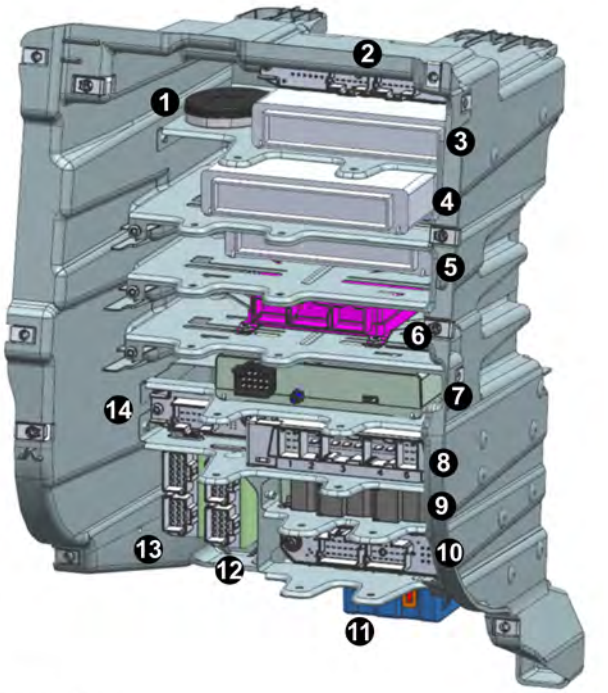

NOTE: This figure shows almost all slots filled. In a typical vehicle, more electronics bay slots would be free.

1. Truck Data Connect Antenna
2. Chassis CAN Starpoint Connector
3. Common Telematics Platform
4. Expansion Module
5. Expansion Module
6. Electronically Controlled Air Suspension (ECAS) ECU
7. Integrative Predicative Powertrain Control (IPPC) Module
8. Common Powertrain Controller ECU
9. Antilock Braking System (ABS) ECU
10. Cabin CAN Starpoint Connector
11. Central Gateway
12. Video Radar Decision Unit (VRDU) ECU
13. Expansion Module
14. Powertrain CAN Starpoint Connector

Fig 240, Electronics Bay

10.03 Cab Load Disconnect Switch

10.03.01 Cab Load Disconnect Switch, General Information

WARNING:
Turning the cab load disconnect switch (CLDS) to the off position does **not**

IMPORTANT: The ignition should be turned off before turning the cab load disconnect switch on or off.

NOTE: If parking the vehicle for more than two days, turn the cab load disconnect switch (CLDS) to the OFF position. If parking the vehicle for more than two days and the vehicle is not equipped with a CLDS, or if parking the vehicle for more than five days, disconnect the batteries. Even with the CLDS off, the vehicle draws a small amount of battery power. Disconnecting the batteries when parking the vehicle for extended periods prevents battery discharge and helps prolong battery life.

The cab load disconnect switch (CLDS) is an optional switch that can be used to open (turn OFF) or close (turn ON) circuits between the battery and the battery cable access box (BCA).

A vehicle in daily use would have the CLDS turned ON. When the CLDS is set to ON, a red LED indicator at the base of the switch selector illuminates. See Fig.241,Cab Load Disconnect Switch.

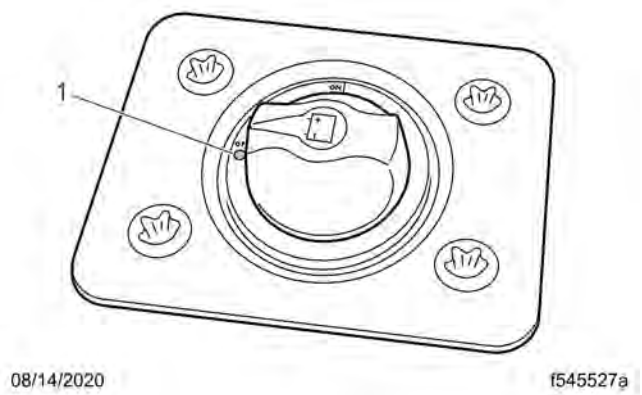

1. LED Indicator Light

Fig 241, Cab Load Disconnect Switch

The CLDS should be set to OFF if the vehicle is going to be parked for more than two days. Turning the CLDS to OFF minimizes the power draw on the battery, preserving battery life and the ability of the vehicle to start after being parked for an extended period of time.

The CLDS may be mounted in a variety of location, including:

- inside the cab on the outboard side of the driver's seat;
- behind the cab on the driver's side;
- at the battery box;
- outside of the cab.

If the CLDS is turned to the off position while the vehicle is running, the emergency power system will activate. The powertrain power distribution module will receive power from the emergency power feed, but the batteries will not be charging. See the section on **Emergency Power** for details about vehicle behavior under these conditions.

A flashing red LED indicates an error with the CLDS. Take the vehicle to an authorized service center for diagnostics and repair.

10.03.02 Battery Contactor Control Board

The optional battery contactor control board (CCB) is designed to cut power to high-current components when the cab load disconnect switch is in the OFF position. The battery contactor control board has an LED that reports the status of the cab load disconnect switch. See Fig.243,Battery Cable Access Box (engine side). See Table.29,CLDS LED Status Messages for LED status message explanations; this information will also posted on a label inside the cover of the battery cable access box, shown in Fig.242,Example Fuse Labeling on BCA Cover.

08/14/2020 f547313

Fig 242, Example Fuse Labeling on BCA Cover

05/26/2016 f546354

Fig 243, Battery Cable Access Box (engine side)

1. Cab Load Disconnect Switch Status LED

Table 29, CLDS LED Status Messages

CLDS LED Status Messages		
Description	LED Status	Message

Solid red	ON	CLDS ON (normal operation)
Slow flashing red	ON	CLDS disconnected (error)
Flashing red	ON	CLDS ON/circuits OFF (error)
Fast flashing red	ON	CLDS OFF/circuits ON (error)
OFF	OFF	Power OFF

Table 29, CLDS LED Status Messages

10.04 Emergency Power

NOTE: Emergency power mode is not available on vehicles built from September 2021 to the present.

Vehicles with CEEA+ architecture built before September 2021 may not exhibit the behaviors listed below when the emergency power circuit is active.

WARNING:
If emergency power is activated, do not shut down the engine until the vehicle is out of traffic and in a safe place. The engine will not be able to be restarted until the cause of the loss of power is corrected.

The emergency power circuit, formerly called limp home mode, allows a vehicle to be moved out of traffic and off the road in the event of a loss of power.

The emergency power circuit is live even when the cab load disconnect switch (CLDS) is turned off.

When the emergency power circuit is active, the vehicle will display varying behaviors depending on the cause of the loss of power:

- Windshield wipers may activate in vehicles built in or after 2018.
- Windshield wipers may activate in vehicles built before 2018 if the sSAM module and/or software has been upgraded.
- Gauges may become unresponsive or freeze.
- Switches may become inoperative.
- Warning lamps may display indicating low voltage and/or ECU faults.
- Different lamps on both or one side of the vehicle will come on and stay on.
- Different lamps on both or one side of the vehicle will start flashing.

Causes and their specific symptoms are detailed in the **New Cascadia Electrical Systems and Troubleshooting Manual** .

No matter the cause, the following lamps will remain constantly on:

- headlamps, low beams (either the left, right, or both)

No matter the cause, the following lamps will flash:

- front turn signals, left and right

Turning the ignition switch to OFF when in emergency power mode shuts down the exterior lighting, windshield wipers, and the engine. The engine will not start if the ignition switch is turned back to the ON position.

10.05 Powernet Management

The powernet management feature protects the batteries from excessive discharge by disconnecting certain loads—features that draw power—from the battery power supply. This allows the batteries to maintain enough of a charge to restart the vehicle.

Features that draw power are prioritized into different categories:

- House loads: this includes the majority of dash and sleeper power outlets, sleeper reading and spot lamps, and sleeper auxiliary fans.
- Basic loads: this includes power for fleet management systems and third party telematics as well as critical dash and sleeper power outlets.

By making noncritical features that draw power temporarily unavailable, powernet management allows the driver to continue using critical features.

Progressive low voltage disconnect (PLVD) is used to implement the powernet management feature.

PLVD calculates disconnecting loads based on battery voltage, ignition switch status, and engine rpm. When battery voltage drops below a predetermined value, house loads are turned off. One minute before house loads are turned off, a pop-up message will display in the ICU and an audible alarm will sound.

The front reading lamp, spot lamp, and sleeper lamps—designated as house loads—can be turned back on after being shutdown by PLVD by pressing on the light or light switch.

No alarm sounds before basic loads are turned off.

A time delay is implemented for the shutdown and reactivation of loads to avoid unnecessary cycling when battery voltage is close to shutdown thresholds.

Loads disconnected by the PLVD will reconnect when all of the following conditions are met:

- Ignition ON.
- Engine at 450 rpm or above.
- Batteries reach and maintain 12.7 volts for one minute.

10.06 Optional Power Systems

10.06.01 Shore Power

A 48 inch sleeper may be equipped with shore power; a 60 inch and 72 inch sleeper may be equipped with shore power and/or an optional inverter/charger.

Shore power provides the ability to connect to an external power source when parked by providing exterior power inlets. The 120 volts of alternating current provided can be used to power small appliances and electrical equipment without idling the engine.

A shore power system consists of one or two 120 volt power inlets on the exterior of the cab and, depending on the cab height, one to two power receptacles inside the cab. Sixty-inch and seventy-two inch raised roof sleeper cabs have two power receptacles; the forty-eight raised roof sleeper cab has one power receptacle.

An optional 120 volt indicator illuminates on the ICU when the shore power system is in use.

10.06.02 Inverter/Charger

An optional 1500- or 1800-watt inverter/charger is available on 60 inch and 72 inch sleepers. An inverter coverts the vehicle's battery power to 120 volts to provide electricity for small appliances and electrical equipment. It is located in the driver-side luggage compartment. See Fig.244,Inverter/Charger. The unit has one three-pin GFIC OUT connector, one three-pin GFIC IN connector, and two AC power outlets.

Fig 244, Inverter/Charger

DANGER:

Do not store gasoline, flammable material, or any component with a connection to the fuel system in the storage compartment with the inverter/charger. The unit contains equipment that may produce sparks. Storing flammable or electrical equipment in proximity to the unit could result in fire or explosion hazards, which could result in serious injury or death.

The display on the sleeper control panel provides information about the operation of the unit. See Fig. 245,Inverter/Charger Display Panel (Xantrex Freedom) (Xantrex Freedom) or Fig. 246,Inverter/Charger Display Panel (Eaton)(Eaton). See Table.30,Display Panel Functions for general control panel details.

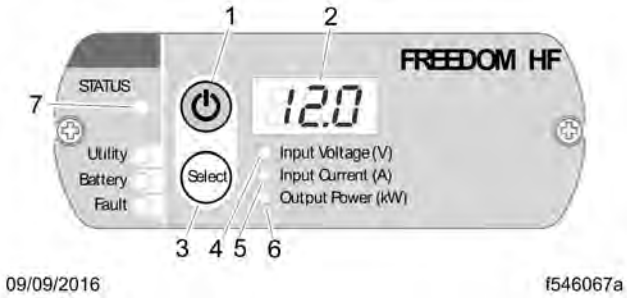

1. Power Button
2. LED Display
3. Select Status Display Button
4. Input Voltage LED
5. Input Current LED
6. Output Power LED
7. Status LED

Fig 245, Inverter/Charger Display Panel (Xantrex Freedom)

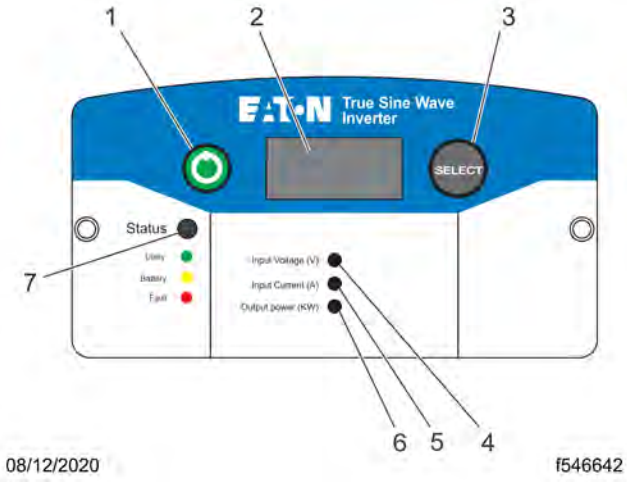

1. Power Button
2. LED Display
3. Select Status Display Button
4. Input Voltage LED
5. Input Current LED
6. Output Power LED
7. Status LED

Fig 246, Inverter/Charger Display Panel (Eaton)

Table 30, Display Panel Functions

Display Panel Functions		
Number	**Name**	**Function**
1	Power Button	Press the power button for one second to turn the unit on or off (when AC shore power is not present). Press and hold the button for five seconds to enter the Settings mode. See the owner's manual for more information.

2	LED Display	The three digit LED display screen shows status information and fault codes.
3	Select Status Display Button	The Select status display button changes the display or settings. Press the Select button to cycle through the setting options. See the owner's manual for more information. With the inverter mode on, press the button to choose what appears on the LED display screen: Input Voltage, Input Current, or Output Power. An LED will illuminate next to the chosen mode. Details are provided below. NOTE: The unit is in 'Inverter Mode' when shore power is not present and the unit is using the battery to power the appliances connected to it. In an alarm condition, press and hold the button for two seconds to disable or enable the audible alarm.
4	Input Voltage LED	In inverter mode, when Input Voltage is selected, the corresponding LED will light up and the display will show the input voltage.
5	Input Current LED	In inverter mode, when Input Current is selected, the corresponding LED will light up and the display will show the input current.
6	Output Power LED	In inverter mode, when Output Power is selected, the corresponding LED will light up and the display will show the output power.
7	Status LED	The Status LED indicates the unit's mode of operation through the display of one of three colored lights that **Green** : Utility (Shore Power Mode) A solid green light indicates that the battery is fully charged. A flashing green light indicates that the unit is charging the battery. **Yellow** : Battery (Inverter Mode) A solid yellow light indicates that the unit is using the battery to supply AC power. A flashing yellow light indicates that the unit is in inverter mode, but AC shore power is detected and the unit is transferring to shore power mode within 20 seconds. **Red** : Fault Condition. See the owner's manual for fault code information and troubleshooting procedures.

Table 30, Display Panel Functions

For more information about troubleshooting, settings, and other features, see the owners manual included with the inverter/charger.

11.01 Engine Starting 246
11.01.01 Engine Starting 246
11.01.02 Cold-Weather Starting 248
11.01.03 Starting After Extended Shutdown 248
11.02 Engine Operation 249
11.02.01 Safety and Environmental Considerations 249
11.02.02 Engine Break-In 250
11.02.03 Normal Operation 250
11.02.04 Cold-Weather Operation 250
11.02.05 High-Altitude Operation 251
11.03 Engine Shutdown 251
11.04 Engine Protection—Warning and Shutdown 251

11. Engine Starting, Operation, and Shutdown

11.01 Engine Starting

11.01.01 Engine Starting

This engine chapter is to serve as a guide for best practices only. Each engine model may have operating characteristics that are unique to that particular engine, and will be documented in the engine manufacturer's literature. Always see specific instructions and recommendations from the engine manufacturer.

NOTE: Before starting the engine, read 4.01.01 Instrumentation Control Unit, **Instruments** , and 5.01 Ignition Switch , **Driver Controls** . Read the engine manufacturer's operating instructions before starting the engine.

WARNING:

Never pour fuel or other flammable liquid into the air inlet opening in the air intake in an attempt to start the vehicle. This could result in a flash fire causing serious personal injury or property damage.

NOTE: This vehicle is equipped with starter interlocks to enhance reliability and safety. Anti-grinding, starter pinion, and thermal protection logic limit the amount of time and conditions for starter engagement.

Cranking may be limited from 5 to 15 seconds, with a 30-second cool-down period, as determined by the protection logic.

If the engine is turning, the starter will not engage.

Depending on the transmission option, the starter will not engage if the clutch is not fully depressed, or if the transmission is not in neutral.

IMPORTANT: The starter **can not** be used for priming the fuel system. If the fuel/water separator filter is replaced, and the fuel system needs to be primed, see the engine manufacturer's operating instructions.

1. Before engine start-up, complete the pre- and post-trip inspections and maintenance procedures in 24.01 Safety Precautions.
2. Set the parking brake.
3. Place the transmission in neutral. On vehicles with manual transmissions, fully depress the clutch pedal.

   NOTE: Depending on local jurisdictional emissions regulations, vehicles and/or engines that are domiciled outside of the U.S. and Canada may not be equipped with the 'STARTER BLOCKED' function.

4. Turn the ignition switch to the ON position, shown in Fig.247,Ignition Switch, and allow the start-up sequence to complete.

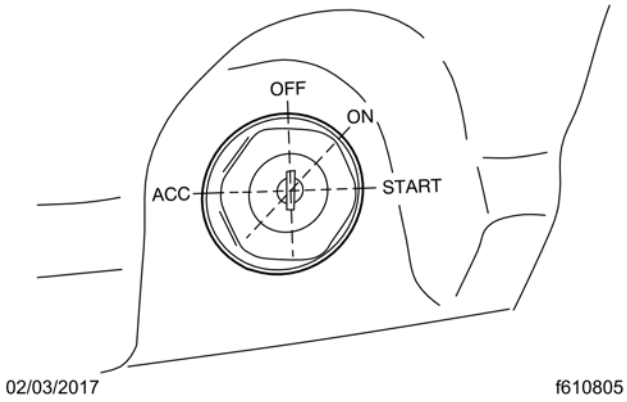

Fig 247, Ignition Switch

NOTE: The driver display screen may present 'STARTER BLOCKED' message if the start-up sequence is not completed, the transmission is in gear, or the starter has overheated.

5. Once the start-up sequence has completed, turn the ignition key to the START position. Release the key the moment the engine starts.

   If the vehicle is equipped with an engine start switch, shown in Fig.248,Engine Start Switch, hold the switch down while turning the ignition key to the START position. Release the switch and the key the moment the engine starts.

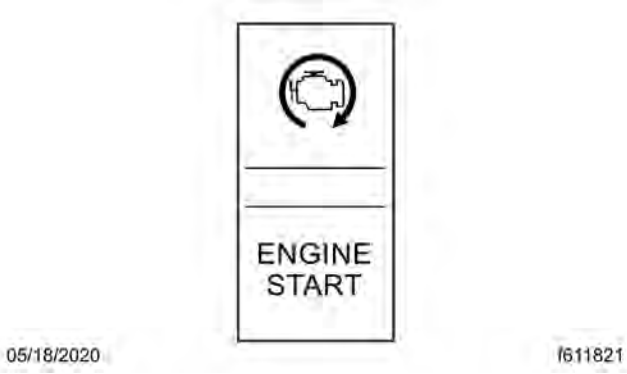

Fig 248, Engine Start Switch

NOTICE:
Do not rev the engine if the oil pressure gauge indicates no oil pressure. Shut down the engine if oil pressure does not build within approximately ten seconds. Check to determine the cause of the problem. Operating the engine with no oil pressure will damage the engine.

6. It is not necessary to idle the engine before engaging or starting the operation, but load should be applied gradually during the warm-up period until the oil temperature reaches 140°F (60°C).
7. Apply load gradually during the warm-up period.

NOTICE:
If the oil pressure gauge indicates no oil pressure, shut down the engine within approximately ten seconds to avoid engine damage.

8. Check the oil pressure gauge for any drop in lubricating oil pressure or mechanical malfunction in the lubricating oil system. Minimum oil pressure at idle is 7 psi (50 kPa).

11.01.02 Cold-Weather Starting

See the engine manufacturer's operation manual for starting aids that are approved for specific engines.

11.01.03 Starting After Extended Shutdown

Before engine start-up, complete the engine pre-trip inspections in 24.01 Safety Precautions.

NOTICE:
Failure to eliminate water-diluted lubricating oil may lead to serious engine damage at startup.

An engine in storage for an extended period of time (over winter, for example) may accumulate water in the oil pan through normal condensation of moisture on the internal surfaces of the engine. Oil diluted by water cannot provide adequate bearing protection at start-up. For this reason, change the engine oil and filters after extended storage.

11.02 Engine Operation

11.02.01 Safety and Environmental Considerations

WARNING:

Do not operate the engine in an area where flammable vapors such as gasoline or diesel fumes are present. Shut off the engine when in an area where flammable liquids or gases are being handled. Failure to observe these precautions could result in serious injury or death.

All engines on Western Star vehicles comply with the requirements of the Federal (U.S.) Clean Air Act. Once an engine is placed in service, the responsibility for meeting both state and local regulations is with the owner/operator.

IMPORTANT: Depending upon local jurisdictional emissions guidelines, vehicles that are domiciled outside of the U.S. and Canada may not have engines and/or emissions aftertreatment systems that are compliant with current emissions regulations.

NOTICE:

It is extremely important that the following guidelines be followed for engines that comply with EPA07 or newer regulations, or damage may occur to the aftertreatment device, and the warranty may be compromised.

Use ultralow-sulfur diesel with 15 ppm sulfur content or less.

Do not use fuel blended with used engine lube oil or kerosene.

Use only approved engine lube oil. For lists of engine oils approved for Detroit Diesel engines, refer to the Engine Operator Manual, accessible on Lubricants, Fuels & Coolants on the DTNA Portal. For third party engines, please refer to the engine manual.

A Top Tier™ compliant fuel is recommended. Look for the symbol that denotes a Top Tier compliant fuel; see Fig. 249, Top Tier Fuel Symbol.

Fig 249, Top Tier Fuel Symbol

Adequate maintenance of the engine and the diesel particulate filter (DPF) are the responsibility of the owner/operator, and are essential to keep the emission levels low. Good operating practices, regular maintenance, and correct adjustments are factors that will help keep emissions within the regulations.

The driver should be familiar with the vehicle warning system in order to bring the vehicle to a safe stop if the engine malfunctions. If the driver doesn't understand how the warning system works, an engine shutdown could occur, causing a safety hazard. See 12.01.01 Idle Shutdown Timer for more information.

11.02.02 Engine Break-In

Each engine must pass a full-load operating test on a dynamometer before shipment, thereby eliminating the need for a break-in. Before running the engine for the first time, follow the instructions in the manufacturer's engine operation manual.

11.02.03 Normal Operation

WARNING:
Do not operate the engine in an area where flammable vapors such as gasoline or diesel fumes are present. Shut off the engine when in an area where flammable liquids or gases are being handled. Failure to observe these precautions could result in serious injury or death.

Every engine has an operating range in which it performs most efficiently. The operating range extends from maximum torque rpm at the low end, to engine rated speed at the high end. Most engines deliver best fuel economy when operated in the low- and mid-speed segments of the efficiency range and produce maximum horsepower at rated speed, which is also the recommended maximum speed of the engine. For further engine-specific information, see the engine manufacturer's operation manual.

Prolonged idling of engines is not recommended, and is illegal in some states. Idling produces sulfuric acid that is absorbed by the lubricating oil, and eats into bearings, rings, valve stems, and engine surfaces. If you must idle the engine for cab heating or cooling, use the high idle function of the cruise control switches. An idle speed of 900 rpm should be enough to provide cab heat in ambient temperatures that are above freezing.

If the engine is programmed with an idle shutdown timer, 90 seconds before the preset shutdown time, the 'CHECK' engine light will begin to flash at a rapid rate. If the position of the clutch pedal or service brake changes during this final 90 seconds the idle shutdown timer will be disabled until reset.

11.02.04 Cold-Weather Operation

Satisfactory performance of a diesel engine operating in low ambient temperatures requires modification of the engine, surrounding equipment, operating practices, and maintenance procedures. The lower the temperature, the greater the amount of modification required. For service products approved for use in cold weather for your engine, see the engine manufacturer's engine operation manual.

If satisfactory engine temperature is not maintained, maintenance costs will increase due to greater engine wear. If the engine coolant gets too cold, raw fuel will wash the lubricating oil off the cylinder walls and dilute the crankcase oil, causing all moving parts of the engine to suffer from poor lubrication.

If the engine is in good mechanical condition and the precautions necessary for cold-weather operation are taken, ordinary cold weather will not cause difficulty in starting or loss of efficiency.

The following points are important to observe when operating in cold weather.

- Check for cracks in the battery cases, for corrosion of the terminals, and for tightness of the cable clamps at the terminals.
- Charge the batteries to full capacity. Replace damaged batteries.
- If equipped, turn off the load disconnect switch after the engine is shut down to prevent battery discharge.
- Have the alternator output checked at an authorized Western Star service provider.
- Check the condition and tension of the drive belts.
- See the engine manufacturer's operation manual for recommended heaters, low-viscosity lubricating oils, winter-grade fuels, and approved coolants.
- Periodically check the coolant mixing ratio (concentration of antifreeze in the coolant). Add more if necessary.
- At outside temperatures below -4°F (-20°C), a coolant preheater is recommended.

NOTICE:
For Detroit engines (EPA07 and newer), use of a winterfront is not recommended, as it can cause false fault codes with the engine and aftertreatment system, and possible emission component failures.

If using a winterfront, leave at least 25 percent of the grille opening exposed in sectioned stripes that run perpendicular to the charge-air-cooler tube-flow direction. This assures even cooling across each tube and reduces header-to-tube stress and the chance of component failure.

For engine-specific guidelines, see below:

Cummins engines: A winterfront may be used to improve cab heating while idling, but only when the ambient temperature remains below 10°F (-12°C).

Detroit engines: Use of a winterfront is not recommended. Using a winterfront can cause excessive fan run time, increased fuel consumption, and failure of the DEF system heaters to operate correctly, resulting in fault codes, poor performance, and power reduction. A winterfront should only be used temporarily in the following situations:

- To improve cab heating while idling in an extremely cold ambient temperature;
- When the ambient temperature remains below -22°F (-30°C) and the engine is unable to maintain a running coolant temperature of 175°F (80°C) during normal over-the-road operation.

11.02.05 High-Altitude Operation

Engines lose horsepower when operated at high altitude because the air is too thin to burn as much fuel as at sea level. This loss equals about three percent for each 1000 ft (300 m) altitude above sea level for a naturally aspirated engine.

All engines used on Western Star vehicles are altitude-compensated by the use of a turbocharger. This reduces smoky exhaust at high altitudes, requires less downshifting, and allows the engine to make better use of its fuel. Nevertheless, shift gears as needed to avoid excessive exhaust smoke.

11.03 Engine Shutdown

1. With the vehicle stopped, set the parking brake and place the transmission in neutral.

NOTICE:
Idle the engine one to two minutes before shutting it down. After hard operation, shutting down the engine without idling may cause damage to the turbocharger.

2. Allow the engine to idle one to two minutes before shutting it down. This allows the lubricating oil and the coolant to carry heat away from the combustion chambers, bearings, shafts, and seals.
3. Turn off the ignition switch and shut down the engine.

11.04 Engine Protection—Warning and Shutdown

The driver should be familiar with the vehicle warning system in order to bring the vehicle to a safe stop if necessary. If the driver doesn't understand how the warning system works, the driver may not be able to utilize the advantage of the advance warning system to pull over appropriately.

The engine will begin a warning and derate and/or shutdown process if the engine coolant temperature, coolant level, engine oil pressure, or exhaust aftertreatment system (ATS) reach preset levels. On some engines, the warning process will

begin when the engine oil temperature, engine coolant temperature, or the intake air temperature reach preset levels. Detroit™ engines may also begin the warning and shutdown process if water is detected in the fuel.

See the engine manufacturer's operation manual for specific details for your vehicle. See 13.01 Greenhouse Gas Emissions and Fuel Consumption Standards for the warning and shutdown modes associated with the ATS.

Electronic engine protection can be specified as either SHUTDOWN or WARNING and DERATE.

WARNING:

When the STOP engine or CHECK engine lamp illuminates, most engines are programmed to shut down automatically within 30 seconds. The driver must immediately move the vehicle to a safe location at the side of the road to prevent causing a hazardous situation that could cause bodily injury, property damage, or severe damage to the engine.

In SHUTDOWN mode, the red STOP engine lamp will illuminate when the problem is serious enough to reduce power or speed. See Fig.250,Engine Warning Lamps. Engine power will ramp down, then the engine will shut down if the problem continues while in derate mode. The driver has 30 or 60 seconds (depending on the critical fault type) after the STOP engine lamp illuminates to move the vehicle safely off the road. If the vehicle cannot be moved to a safe location within that time, turn the ignition switch to OFF for at least five seconds, then restart the engine. Repeat this action until the vehicle is safely off the road.

NOTE: In addition to the warning lamp, the driver display screen will present a warning message when the engine is in SHUTDOWN mode. See Fig.251,Shutdown Alert. For vehicles with Detroit engines, the time remaining before shutdown is displayed.

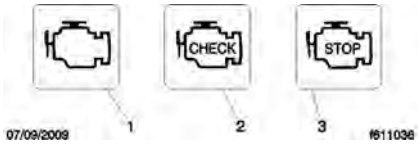

1. Malfunction Indicator Lamp (MIL)
2. CHECK Engine Lamp
3. STOP Engine Lamp

Fig 250, Engine Warning Lamps

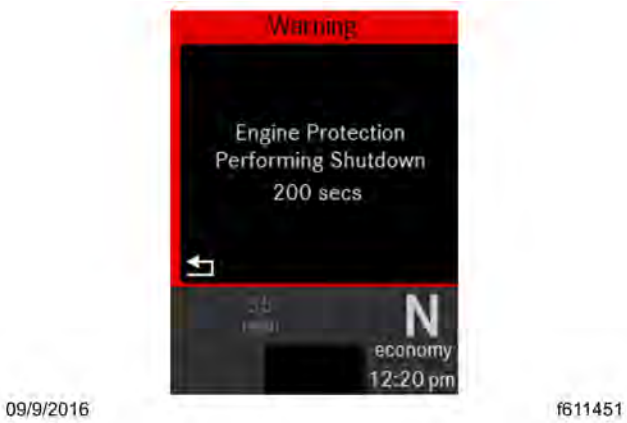

On vehicles with Detroit engines only, the time remaining before shutdown is displayed.

Fig 251, Shutdown Alert

On vehicles with Detroit engines only, the time remaining before shutdown is displayed.

Do not operate the vehicle further until the problem causing the shutdown has been corrected.

Some vehicles may have a shutdown override switch, which can be used to momentarily override the shutdown sequence. This switch resets the shutdown timer, restoring power to the level before the derate. The switch must be pressed again after five seconds to obtain a subsequent override. See Fig.252,Shutdown Override Switch.

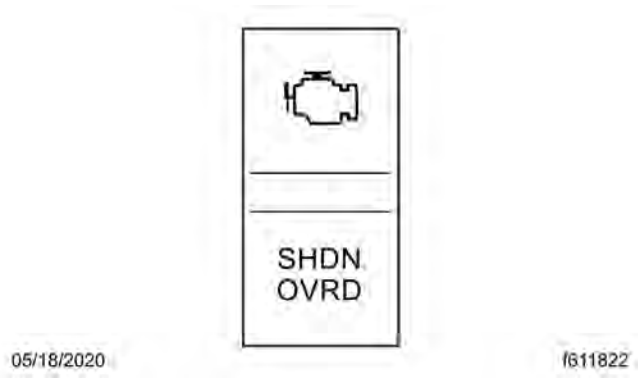

Fig 252, Shutdown Override Switch

NOTICE:

When the derate process begins, immediately get the vehicle serviced in order to prevent severe damage to the engine.

Detroit engines may begin a warning and derate process if water is detected in the fuel, or for high engine coolant temperature. In WARNING and DERATE mode, the CHECK engine, STOP engine, or MIL lamp will illuminate to indicate an engine problem that requires service and the engine controls will begin a derate of engine output. Continuing to run the engine while it is in derate mode could cause severe damage to the engine.

12.01 Engine Idle Limiting 256
12.01.01 Idle Shutdown Timer 256
12.02 Optimized Idle® 256
12.02.01 General Information 256
12.02.02 Activating Optimized Idle 257
12.02.03 Reactivating Optimized Idle 259
12.02.04 Deactivating Optimized Idle 260
12.03 Power Takeoff (PTO) Governor 260
12.03.01 Power Takeoff (PTO) Governor 260
12.03.02 PTO Instrumentation Unit Controls 261

12. Optional Engine Systems

12.01 Engine Idle Limiting

12.01.01 Idle Shutdown Timer

This feature is an optional 1- to 100-minute idle shutdown system with a timer on the driver display screen. Its purpose is to conserve fuel by eliminating excessive idling. Idle shutdown timing and parameters are programmable. See the engine manufacturer's operation manual for specific details for your vehicle.

12.02 Optimized Idle®

12.02.01 General Information

Optimized idle is an optional feature on vehicles equipped with Detroit engines. Optimized idle reduces engine idle time by running the engine only as required when the vehicle is parked.

Optimized idle automatically shuts down and restarts the engine as needed to:

- keep the engine oil temperature between programmed limits;
- maintain battery voltage;
- keep the cab and sleeper areas at the thermostat setting; and
- in coordination with the dual HVAC system (if equipped), maintain the battery and assist in HVAC.

The benefits of the system include reduced engine idle time, fuel savings, reduction of exhaust emissions and noise, increased starter and engine life, and a reduced chance of dead batteries.

Optimized idle operates in the following modes:

- Cold startability mode and battery mode: both modes keep the battery charged and engine oil temperature between programmed limits.
- Interior comfort mode (for sleeper cabs without a dual HVAC system): keeps the cab and sleeper at a constant preset temperature, in addition to all functions available in cold startability and battery modes. Extended and continuous run modes allow the engine to keep running longer if necessary.
- Interior comfort mode with a dual HVAC system: keeps the cab and sleeper at a constant preset temperature, in addition to all functions available in cold startability and battery modes.

In cold startability mode, optimized idle starts the engine when engine oil temperature drops to a programmable preset lower limit. The engine is shut down when engine oil temperature reaches a programmable upper limit, unless the requirements of other active modes require the engine to keep running.

In battery mode, the engine runs for two hours before shutting down. On vehicles without a dual HVAC system, the engine will run an additional two hours in extended mode if necessary, and continuously in continuous mode. When in continuous mode, the driver display will indicate optimized idle status as ‘continuous battery mode.’ Continuous mode may indicate a problem, such as a bad battery.

Interior comfort mode controls the temperature set point, which is the desired temperature of the cab and sleeper, and the comfort zone, which is the allowed temperature deviation from the set point before the engine starts.

Interior comfort mode with a dual HVAC system operates with the following parameters regarding the set point and comfort zone:

- If the bunk area temperature reaches more than 10°F (5.5 °C) above the set point the comfort zone is exceeded and the dual HVAC system immediately requests the engine to start for comfort support cooling.
- Bunk area temperatures 5 to 10°F (2.8 to 5.5°C) above the set point for over twenty minutes will cause the dual HVAC system to request the engine to start for comfort support cooling.
- If the bunk area temperature drops to more than 10°F (5.5 °C) below the set point, the comfort zone is exceeded and the dual HVAC system immediately requests the engine to start for comfort support heating.

- Temperatures 5 to 10°F (2.8 to 5.5 °C) below the set point for over twenty minutes will cause the dual HVAC system to request the engine to start for comfort support for heating.

In extreme ambient conditions, comfort mode may stay on continuously.

NOTE: If the mode settings are changed while in one mode, the system may continue running in another mode.

When optimized idle is on, it may turn off these functions to reduce stress on the batteries:

- Cab climate control fan
- Sleeper climate control fan
- Mirror heat
- Fuel/water separator heat
- Seat heat
- Advertising light
- Auxiliary circulation fan (windshield)
- Air dryer

12.02.02 Activating Optimized Idle

The vehicle must be in neutral gear, the hood latched, and the park brake set for optimized idle to work. Failure to meet these conditions will result in a checklist pop-up screen showing both the met and unmet conditions. See Fig. 253,Optimized Idle Activation Conditions Pop-Up.

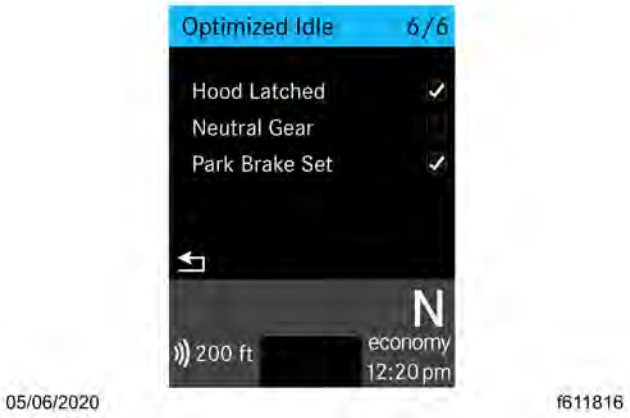

Fig 253, Optimized Idle Activation Conditions Pop-Up

Dismiss the pop-up screen, fix the issue(s), and restart optimized idle.

NOTE: Turning the sleeper HVAC fan off will turn off the interior comfort mode until the fan is turned back on.

1. Set the parking brake.
2. If open, close and secure the hood.
3. Allow the engine to idle if it is running. If the engine is not running, turn the key to the ON position.
4. Put the transmission in neutral.
5. Navigate to the optimized idle screen on the driver display. See Fig.254,Optimized Idle Start Screen.

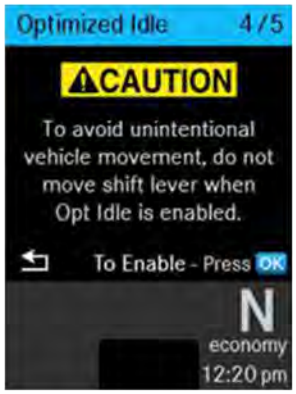

05/20/2016 f611420

Fig 254, Optimized Idle Start Screen

6. Press OK on the steering wheel switch pod to view the mode option screen. See Fig. 255, **Optimized Idle Mode Selection Screen**.
7. Select OK to enable optimized idle, and, if desired, turn on the interior comfort mode (sleeper cabs only). The current optimized idle state is displayed. See Fig.256,Optimized Idle State Screen.

   When optimized idle is active, the optimized idle telltale illuminates at the bottom of the driver display. See Fig. 257,Optimized Idle Telltale.

   If optimized idle fails to start, see the driver display for information.

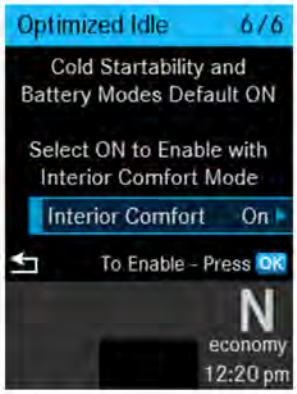

09/09/2016 f611421

Fig 255, Optimized Idle Mode Selection Screen

Fig 256, Optimized Idle State Screen

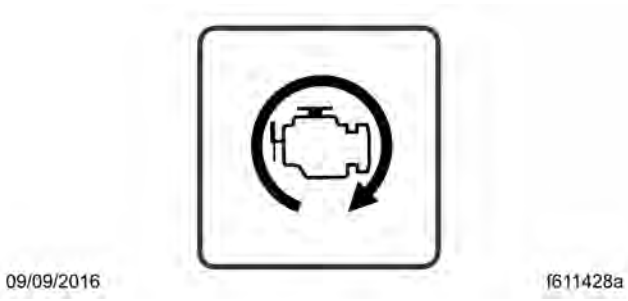

Fig 257, Optimized Idle Telltale

8. If the interior comfort mode is activated (sleeper cabs only), set the desired temperature and fan speed on the sleeper HVAC controls.

   The allowable temperature range for optimized idle operation is 65 to 80°F (18 to 27°C).

   Optimized idle will operate the engine, starting and turning it off as needed to maintain battery charge, engine oil temperature, and cab/sleeper temperature.

12.02.03 Reactivating Optimized Idle

If the hood is opened or the vehicle is put into gear while optimized idle is running, the system will enter a safety loop and a pop-up will appear. See Fig.258,Safety Loop Pop-Up Restoring operating conditions (e.g. closing the hood or setting the transmission in neutral) and performing a key cycle will allow you to reactivate optimized idle.

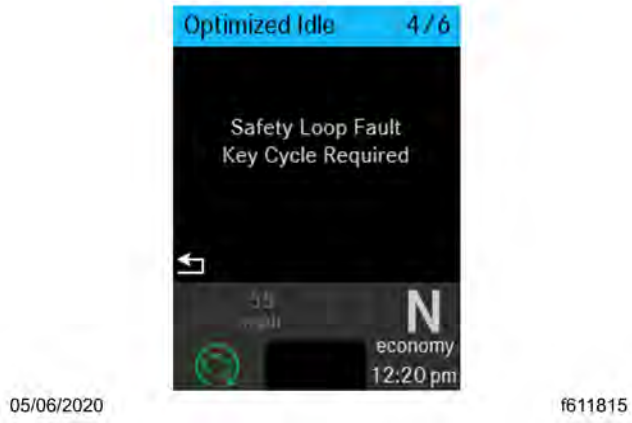

Fig 258, Safety Loop Pop-Up

12.02.04 Deactivating Optimized Idle

Optimized idle can be shut down by;

- using the optimized idle menu screens on the driver display,
- turning off the ignition,
- and using the drive-away feature, as follows:
- If the engine is running: Release the parking brakes, put the transmission in gear (automated/automatic transmissions), or depress the clutch (manual transmissions).
- If the engine is not running: Start the engine. Release the parking brakes, put the transmission in gear (automated/automatic transmissions), or depress the clutch (manual transmissions).
- Let the engine return to base idle. The telltale will turn off. Optimized idle is now disabled.

12.03 Power Takeoff (PTO) Governor

12.03.01 Power Takeoff (PTO) Governor

WARNING:
To avoid injury, do not install a PTO that is not Detroit Diesel approved onto a Detroit™ Transmission. Use of a non-Detroit Diesel approved PTO with a Detroit Transmission could result in unintended operation which could lead to severe personal injury.

Engine power takeoffs (PTO) tap into engine power to run auxiliary devices, such as hydraulic pumps that power additional equipment.

The following are general guidelines for operating a PTO.

1. Set the parking brake and put the transmission in neutral.
2. Press the dash PTO switch. Release the switch when the light begins to blink.

   When the light illuminates steadily, the PTO is engaged and ready to operate. In stationary mode, the vehicle must remain in neutral with the parking brake set.

3. To activate mobile mode, shift from neutral to reverse, 1st, or 2nd gear. The clutch will open and the PTO will disengage for a moment.
4. Touch the accelerator pedal to close the clutch and engage the PTO in mobile mode. The PTO may be operated with the transmission in neutral or reverse, and 1st and 2nd gears only.

   NOTE: Do not attempt to change gears while the vehicle is moving. The transmission will ignore the request.

5. To deactivate mobile mode, bring the vehicle to a stop. The clutch will open and shut down power to the PTO.
6. To resume stationary mode, shift to neutral. The PTO will engage.
7. To deactivate PTO, press the PTO switch again. When the light in the switch goes out, power to the PTO is shut off.

12.03.02 PTO Instrumentation Unit Controls

Power take off (PTO) screens can be accessed under the Vehicle Settings menu.

After the PTO is engaged using the PTO switch, available PTO speeds are indicated by check boxes on the Power Take Off Screen in the instrumentation unit. See Fig.259,Quick Access Screen: Power Take Off (PTO).

Speeds shown are representational only. Actual speeds are determined by the vehicle's parameters.

Fig 259, Quick Access Screen: Power Take Off (PTO)

Speeds shown are representational only. Actual speeds are determined by the vehicle's parameters.

PTO speed 1 will be selected initially. If a speed is out of range it will not be available to select. If a PTO speed is available for customization, it will be indicated with a Customize option.

13.01 Greenhouse Gas Emissions and Fuel Consumption Standards....264
13.02 EPA-Regulated Emissions Aftertreatment Systems....265
13.02.01 General Information....265
13.02.02 Euro V Emission Compliant Engines for Export....265
13.02.03 EPA10 and Newer Engines....266
13.02.04 Regeneration....266
13.02.05 Parked Regeneration Operations....267
13.02.06 ATS Warning Lamps and Messages....269
13.02.07 Maintenance....273
13.03 Diesel Exhaust Fluid and Tank....273
13.03.01 Diesel Exhaust Fluid....273
13.03.02 DEF Tank....273
13.03.03 Fuel/DEF Gauge....273
13.03.04 DEF Warnings and Engine Limits....274

13. Emissions and Fuel Efficiency

13.01 Greenhouse Gas Emissions and Fuel Consumption Standards

Model year 2007 and later vehicles and/or engines domiciled in the U.S. or Canada are designed to meet Emission and Fuel Efficiency Standards of the U.S. (Federal) Environmental Protection Agency (EPA), the National Highway Traffic Safety Administration (NHTSA), Emission Regulations under the Canada Motor Vehicle Safety Act in Canada, and the California Air Resources Board (CARB) effective as per the applicable emission model year. To determine an engine's or vehicle's emission model year, see the respective EPA/CARB certification label.

Table 31, EPA Regulations

EPA Regulations	
Regulation	**Emissions Components**
EPA07 (Reduction of nitrogen oxides (NOx) emissions to 1.1 g/bhp-hr, and particulate matter emissions to 0.01 g/bhp-hr)	Aftertreatment device (ATD) containing a diesel particulate filter that traps soot and ash.*
EPA10 (Reduction of NOx emissions to 0.2 g/bhp-hr)	EPA07-type ATD, with additional selective catalyst reduction (SCR) technology that utilizes diesel exhaust fluid (DEF) to convert NOx to nitrogen and water vapor.
GHG14 (Reduction of greenhouse gas emissions)	Fuel efficiency components including, but not limited to, engines, tires, aerodynamic components, vehicle speed limiters, and idle reduction timers specifically designed to meet regulatory fuel efficiency and greenhouse gas emissions standards.
GHG17	Fuel efficiency components including, but not limited to, engines, tires, aerodynamic components, vehicle speed limiters, and idle reduction timers specifically designed to meet regulatory fuel efficiency and greenhouse gas emissions standards.
GHG21	GHG14/17 components plus additional components including, but not limited to, transmissions, axles, predictive technologies, idle reduction technologies for vocational vehicles, tire pressure monitoring systems.

Table 31, EPA Regulations

* Cummins and Detroit ATD's are also equipped with a diesel oxidation catalyst to break down pollutants.

Table 32, Emission Regulations by Model Year

Emission Regulations by Model Year		
Model Year	**Engine Regulation**	**GHG Regulation**
2007–2009	EPA07	N/A
2010–2012	EPA10	N/A
2013–2015	EPA10, GHG14	GHG14
2016	EPA10, GHG17	GHG14

2017–2020	EPA10, GHG17	GHG17
2021–and later	EPA10, GHG21	GHG21

Table 32, Emission Regulations by Model Year

13.02 EPA-Regulated Emissions Aftertreatment Systems

13.02.01 General Information

IMPORTANT: Depending upon local jurisdictional emissions guidelines, vehicles that are domiciled outside of the U.S. and Canada may not have engines and/or emissions aftertreatment systems that are compliant with current emissions regulations.

NOTICE:

Follow these guidelines for engines that comply with EPA07 or newer regulations or damage may occur to the after-treatment device (ATD) resulting in compromised warranty coverage.

- Use ultralow-sulfur diesel with 15 ppm sulfur content or less.
- Do not use fuel blended with used engine lube oil or kerosene.
- Use only approved engine lube oil. For lists of engine oils approved for Detroit Diesel engines, refer to the Engine Operator Manual, accessible on Lubricants, Fuels & Coolants on the DTNA Portal. For third party engines, please refer to the engine manual.

IMPORTANT: Using non-specification fuels or oils can lead to shortened diesel particulate filter (DPF) cleaning or replace-ment intervals.

IMPORTANT: IMPORTANT: See the engine manufacturer's operation manual for complete details and operation of the aftertreatment system.

13.02.02 Euro V Emission Compliant Engines for Export

In vehicles sold with Euro V engines for export, ultralow-sulfur diesel (15 ppm sulfur content or less) is recommended for maximum engine performance. However, due to varying fuel quality in these markets, use diesel with a maximum sulfur content as follows:

- Cummins Engines 50 ppm (tolerant to 500 ppm)
- Detroit Engines 50 ppm

See Fig.260,Euro V Engine Label (Detroit engine label shown) for an example of the export market Euro V engine label.

(Use diesel with a maximum sulfur content of 50 ppm)

Fig 260, Euro V Engine Label (Detroit engine label shown)

(Use diesel with a maximum sulfur content of 50 ppm)

13.02.03 EPA10 and Newer Engines

The EPA mandates that all engines built after December 31, 2009 must reduce the level of emissions exhausted by the engine to the following levels:

- Nitrogen Oxides (NOx) – 0.2 g/bhp-hr
- Particulate Matter (PM) – .01 g/bhp-hr

To meet EPA guidelines, engines that are compliant with EPA10 and newer regulations use an emissions aftertreatment system (ATS) where the exhaust first passes over the diesel oxidation catalyst (DOC), then passes through the diesel particulate filter (DPF), which traps soot particles. The soot is burned to ash during a process called regeneration (regen).

A selective catalytic reduction (SCR) device is used to reduce NOx downstream of the engine. After exhaust gases leave the diesel particulate filter (DPF), a controlled quantity of diesel exhaust fluid (DEF) is injected into the exhaust stream. In the presence of heat, DEF is converted to ammonia gas, which reacts with NOx in the selective catalyst chamber to yield nitrogen and water vapor, which exit through the tailpipe.

13.02.04 Regeneration

The harder an engine works, the better it disposes of soot.

If the exhaust temperature is high enough, a process called **passive regeneration** (regen) occurs as the vehicle is driven normally.

However, if the engine isn't running hot enough, the electronic controls may initiate an **active regen** , whereby extra fuel is injected into the exhaust stream to superheat and reduce the soot trapped in the diesel particulate filter (DPF) to ash.

Active regen happens only when the vehicle is moving above a certain speed, determined by the engine manufacturer. See your engine operation manual for complete details. Both active and passive regen happen automatically, without driver input.

WARNING:

Active regeneration can occur automatically anytime the vehicle is moving. The exhaust gas temperature could reach 1500°F (800°C), which is hot enough to cause a fire, heat damage to objects, or personal injury to persons near the exhaust outlet. The exhaust temperature can remain high even after the vehicle has stopped. When stopping the vehicle shortly after an automatic regen, ensure the exhaust outlets are directed away from structures, trees, vegetation, flammable materials, and anything else that might be injured or damaged by exposure to high heat.

See ***Regen Switches*** , below, for instructions on preventing automatic regen if necessary.

When operating conditions do not allow for emissions ATD filter cleaning by active or passive regen, the vehicle may require a driver-activated **parked regen** . When this occurs, the driver display screen presents a message indicating that a regen is required. See Fig.261, **Parked Regen Message Screens**. The driver must either bring the vehicle up to highway speed to increase the load (thus starting an active regen), or park the vehicle and initiate a parked regen. See *Regen Operations* , below, for instructions on initiating a parked regen.

06/10/2016 f611396

A. Start Regen Message Screen B. Stop Regen Message Screen

Fig 261, Parked Regen Message Screens

13.02.05 Parked Regeneration Operations

Parked regen is initiated by selecting OK when the driver display screen shows ‘Parked Regen Available’ or ‘Parked Regen Required.’ See Fig.263, **Parked Regen Message Screens**. If the vehicle is equipped with the optional digital Stop Regen feature, a parked regen can be stopped by selecting OK while the regen is in progress. See Fig. 263, **Parked Regen Message Screens**.

Some vehicles may be equipped with a REGEN OFF dash switch. See Fig.262,Stop Regen Dash Switch. To stop a regen in progress or prevent the start of a regen, toggle the switch upwards.

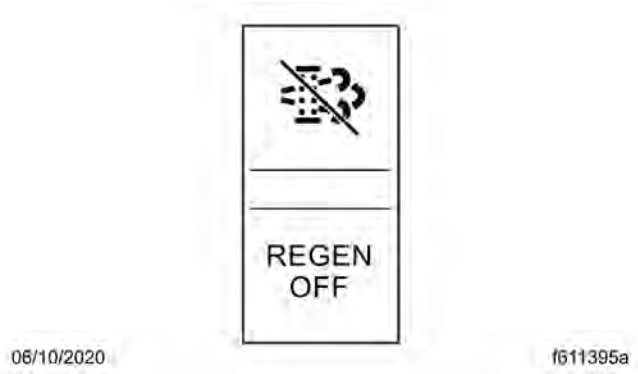

Fig 262, Stop Regen Dash Switch

NOTE: Parked regen can be initiated only when the diesel particulate filter (DPF) lamp is illuminated.

NOTE: During parked regen, exhaust temperatures are very high and could cause a fire, heat damage to objects, or personal injury to persons near the exhaust outlet.Before initiating a parked regeneration, make certain the exhaust outlets are directed away from structures, trees, vegetation, flammable materials, and anything else that may be damaged or injured by prolonged exposure to high heat.

To initiate a parked regen, perform the following steps.

1. Park the vehicle away from all flammable materials, put the transmission in neutral, and set the parking brake.
2. Start and warm the engine until the coolant temperature is at least 150°F (66°C).
3. Select OK when the diesel particulate filter (DPF) screen is displayed on the driver display. See Fig. 263, **Parked Regen Message Screens**. Select OK again to confirm regen. As the regen process is initiated, engine rpm increases and the HEST lamp illuminates to indicate extremely high exhaust temperatures.

   IMPORTANT: The driver must remain with the vehicle during the entire regen cycle.

4. The regen cycle will finish after 20 to 60 minutes, at which time engine idle speed will drop to normal and the vehicle can be driven normally. The HEST lamp will extinguish when vehicle speed exceeds 5 mph (8 km/h) or the system has cooled to normal operating temperature.
5. To stop a parked regen at any time during the process:
   - depress the clutch pedal, brake pedal, or accelerator pedal;
   - select OK on the parked regen screen while the regen is active, then select OK again to confirm;
   - toggle up the REGEN OFF dash switch;
   - shut down the engine.

06/10/2016 f611396

A. Start Regen Message Screen

B. Stop Regen Message Screen

Fig 263, Parked Regen Message Screens

13.02.06 ATS Warning Lamps and Messages

There are three warning lamps that alert the driver of the need to perform a regen, high exhaust temperature, or a need to refill the diesel exhaust (DEF) fluid tank. A label attached to the driver's sun visor explains these warning lamps.

Malfunction Indicator Lamp (MIL)

A steadily illuminated yellow engine malfunction indicator lamp (MIL) indicates an engine fault that affects emissions. See Fig.264,Malfunction Indicator Lamp (MIL).

DPF Status Lamp and Messages

When soot accumulates in the diesel particulate filter (DPF), the driver display screen presents a DPF status bar. As the soot level in the DPF reaches 60%, the DPF status lamp illuminates. See Fig.265,DPF Status Lamp. Perform a parked regen or bring the vehicle up to highway speed to increase the load (thus starting an active regen). After the soot level in the DPF reaches 80%, a parked regen is necessary.

For an explanation of DPF zones, message screens, warning lamps, and available regen modes, see Table.33,DPF Zones, Detroit Engines (Detroit engines) or Table.34,DPF Zones, Cummins Engines (Cummins engines).

If the diesel particulate filter (DPF) status lamp blinks and the driver display screen shows a red status bar (90% full), initiate a parked regen immediately in order to prevent an engine derate.

If the diesel particulate filter (DPF) status lamp blinks, and the driver display screen shows a DPF status bar that is fully red (100% full), begin a parked regen in order to prevent an engine shutdown. Park the vehicle and perform a parked regen.

Table 33, DPF Zones, Detroit Engines

DPF Zones, Detroit Engines			
DPF Zone	DPF Status Bar	Warning Lamps	Regen Mode Available

0	 06/10/2016 f611398 0–10% Green	—	• passive
1	 06/10/2016 f611399 10–60% Green	—	• over-the-road
2	 06/10/2016 f611400 60–70% Yellow	 **Fig 264,** DPF solid yellow **Fig 265,** HEST solid yellow*	• over-the-road • parked
3	 06/10/2016 f611401 70–80% Yellow	 DPF flashing yellow HEST solid yellow*	• over-the-road • parked

4	 06/10/2016 f611402 80–90% Red	 DPF flashing yellow HEST solid yellow*	• parked
5	 06/10/2016 f611403 90–100% Red	 DPF flashing yellow HEST solid yellow*	• parked

Table 33, DPF Zones, Detroit Engines

* Illuminates if exhaust temperature is above a preset limit.

Table 34, DPF Zones, Cummins Engines

DPF Zones, Cummins Engines			
DPF Zone	DPF Status Bar	Warning Lamps	Regen Mode Available
1	 06/10/2016 f611399 0–60% Green	—	• over-the-road

3	 06/10/2016 f611401 60–80% Yellow	DPF flashing yellow HEST solid yellow*	• over-the-road • parked
5	 06/10/2016 f611403 80–100% Red	DPF flashing yellow HEST solid yellow	• parked

Table 34, DPF Zones, Cummins Engines

* Illuminates if exhaust temperature is above a preset limit.

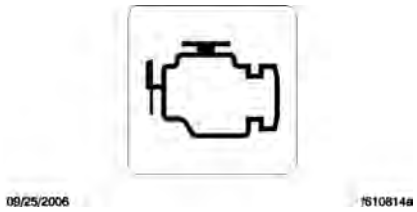

Fig 266, Malfunction Indicator Lamp (MIL)

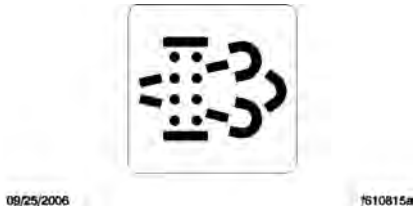

Fig 267, DPF Status Lamp

High Exhaust System Temperature (HEST) Lamp

Slow (10-second) flashing of the high exhaust system temperature (HEST) lamp indicates a parked regen is in progress and the engine's high idle speed is being controlled by the engine software.

Steady illumination of the HEST lamp during a parked regen or if the vehicle speed is below 5 mph (8 km/h), alerts the driver of high exhaust temperature during the regen process. See Fig.266,HEST Lamp.

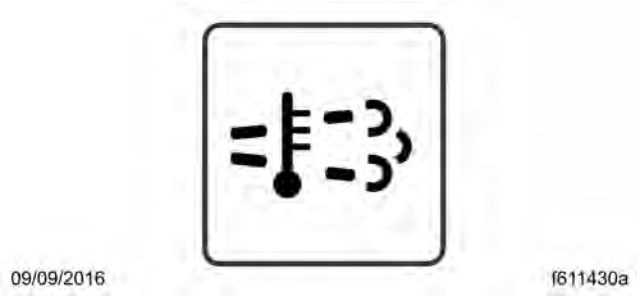

Fig 268, HEST Lamp

13.02.07 Maintenance

Authorized service facilities must perform any DPF service. For warranty purposes, maintain a record that includes:

- date of cleaning or replacement;
- vehicle mileage;
- particulate filter part number and serial number.

13.03 Diesel Exhaust Fluid and Tank

13.03.01 Diesel Exhaust Fluid

Diesel exhaust fluid (DEF) is used in the ATS to lower NOx in the exhaust stream. DEF is colorless and close to odorless (it may have a slightly pungent odor similar to ammonia). It is nontoxic, nonflammable, and biodegradable. It is mildly corrosive to aluminum, but does not affect the strength or structure of the aluminum.

White crystals may be noticeable around components that come into contact with DEF. The crystals are easily removed with water.

Diesel exhaust fluid (DEF) consumption varies depending on ambient conditions and vehicle application.

Freezing Conditions

Diesel exhaust fluid (DEF) freezes to slush at around 12°F (-11°C). It is not damaged or destroyed if frozen, and is fully usable when thawed. The DEF in the tank is allowed to freeze while a vehicle is non-operational. At start-up, normal operation of the vehicle is not inhibited if the DEF is frozen; an immersion heater with engine coolant flowing through it warms the DEF once the engine is running, allowing the SCR system to operate.

13.03.02 DEF Tank

Engines that are compliant with EPA10 and newer regulations are equipped with a diesel exhaust fluid (DEF) tank located on the driver's side of the vehicle behind the battery box or forward of the fuel tank. The DEF tank has a 19 mm filler neck inlet that prevents the hose from a diesel outlet from being inserted, and has a blue cap for easy identification.

13.03.03 Fuel/DEF Gauge

The diesel fuel and DEF levels are measured in a dual-purpose gauge. Below the gauge, a low fuel warning lamp illuminates amber when the fuel level drops below 1/8th of the capacity. See Fig.267,Fuel/DEF Gauge.

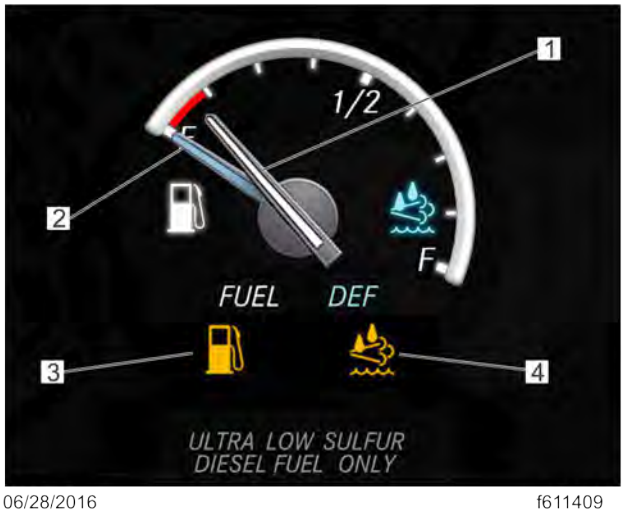

1. Fuel Gauge Pointer
2. DEF Gauge Pointer
3. Low Fuel Level Warning Lamp
4. Low DEF Level Warning Lamp

Fig 269, Fuel/DEF Gauge

The diesel exhaust fluid (DEF) warning lamp illuminates amber when the DEF tank is near empty.

13.03.04 DEF Warnings and Engine Limits

IMPORTANT: Ignoring the diesel exhaust fluid (DEF) low level warnings will result in limited engine power and the application of a 5 mph (8 km/h) speed limit.

DEF Level Low—Initial Warning

When the diesel exhaust fluid (DEF) level is low, the DEF warning lamp illuminates solid amber, and the driver display screen presents an alert. See Fig.268,DEF Level Messages. Refill the DEF tank in order to cancel the warning sequence.

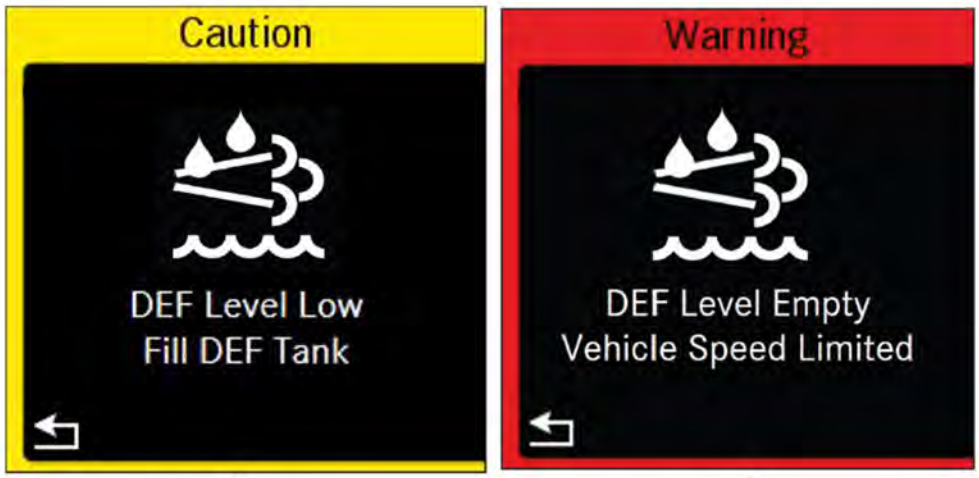

A. DEF Level Low
B. DEF Tank Empty

Fig 270, DEF Level Messages

DEF Empty

When the diesel exhaust fluid (DEF) level reads empty, the following lamps and messages notify the driver.

The DEF warning lamp flashes amber.

- The engine malfunction indicator lamp (MIL) illuminates.
- The driver display screen presents the warning, ‘DEF Tank Empty.’ See Fig.268,DEF Level Messages.

Power is limited with progressively harsher engine power limits applied.

DEF Tank Empty and Ignored

If the diesel exhaust fluid (DEF) tank is not refilled, a 5 mph (8 km/h) speed limit is applied as soon as one of the following actions occurs: an engine shutdown, a detected fuel refill, or the vehicle is parked and idling.

DEF Contamination or SCR Tampering

NOTICE:

Once contaminated diesel exhaust fluid (DEF) or tampering with the aftertreatment system (ATS) has been detected, the vehicle must be taken to an authorized service facility to check the SCR system for damage and to deactivate the warning lights and engine limits.

If contaminated DEF or tampering with the ATS is detected, the DEF warning light flashes and the MIL lamp illuminates to warn the driver.

On vehicles with a Cummins ISB or ISC/L engine the CHECK engine lamp also illuminates.

Limits on the engine power will also be applied.

- On Detroit engines: Engine power is limited with progressively harsher limits applied. If the fault is not corrected, the STOP engine light illuminates and a 5 mph (8 km/h) speed limit is applied as soon as one of the following actions occurs: an engine shutdown, a detected fuel refill, or the vehicle is parked and idling.
- On Cummins engines: Engine power is limited with progressively harsher limits applied. If the fault is not corrected, the STOP engine light illuminates and a 5 mph (8 km/h) speed limit is applied after the next engine shutdown or the next time the vehicle is parked and idling, whichever happens first.

14.01 Brake System General Information 278
14.02 Antilock Braking System (ABS) 282
14.03 Engine Brake 286
14.04 Winch Brake 289

14. Brake Systems

14.01 Brake System General Information

A dual air brake system consists of two independent air systems that use a single set of brake controls. Each system has its own reservoirs, plumbing, and brake chambers. The primary system operates the service brakes on the rear axle; the secondary system operates the service brakes on the front axle. Service brake signals from both systems are sent to the trailer.

WARNING:

Do not operate the vehicle with the front brakes backed off or disconnected. Backing off or disconnecting the front brakes will not improve vehicle handling and may lead to loss of vehicle control, resulting in property damage or personal injury.

If air pressure drops below approximately 70 psi (483 kPa) in either system, a warning light illuminates and a warning shows in the driver display. If the park brake is released, a buzzer will also sound. See Table.35,Brake System Warnings, Indicators, and Messages.

If the low air pressure warning is activated, check the air pressure gauges to determine which system has low air pressure.

Loss of air pressure in the primary air system causes the rear service brakes to become inoperative. The secondary air system will continue to operate the front brakes and the trailer brakes (if equipped).

Loss of air pressure in the secondary air system causes the front axle brakes to become inoperative. The primary air system will continue to operate the rear service brakes and the trailer brakes (if equipped).

Although the vehicle's speed can be reduced using the foot brake control pedal, either the front or rear service brakes will not be operating at full capacity, causing a longer stopping distance. Bring the vehicle to a safe stop and have the air system repaired before continuing.

Table 35, Brake System Warnings, Indicators, and Messages

Brake System Warnings, Indicators, and Messages				
Telltale	**Color**	**Description**		**Driver Display**
	Red	Low Brake Air Pressure (EPA10 and Newer)	Indicates air pressure in the primary or secondary reservoir has dropped below approximately 70 psi (483 kPa).	
	Red	Low Air Pressure (EPA10 and Newer)	Alternate low brake air pressure telltale. Indicates air pressure in the primary or secondary reservoir has dropped below approximately 70 psi (483 kPa).	
	Red	Parking Brake (EPA10 and Newer)	Indicates the parking brake is engaged.	N/A

	Amber	Vehicle ABS	Momentary illumination indicates the vehicle ABS is engaged. Solid illumination indicates a problem with the vehicle ABS. Repair the ABS immediately to ensure full braking capability.	N/A
	Amber	Trailer ABS	Momentary illumination indicates the trailer ABS is engaged. Solid illumination indicates a problem with the trailer ABS. Repair the ABS immediately to ensure full braking capability.	N/A
	Amber	Stability Event	Flashing indicates a stability event has been detected, and the ESC system is active. Solid illumination indicates a problem with the stability system. Repair the ESC system immediately to ensure full stability capability. For more information on the ESC system, see 6.01.01 General Information.	N/A
	Amber	Wheel Spin Event	Flashing indicates a wheel spin event has been detected, and the ATC system is active.	N/A
		ATC Deactivated	Indicates the ATC SPIN button has been pressed to allow wheel slip.	
	Green	Engine Brake	Indicates the engine brake is enabled.	N/A

Table 35, Brake System Warnings, Indicators, and Messages

IMPORTANT: In the event of a total loss of service brakes with full system air pressure, use the parking brake control valve (yellow knob) to bring the vehicle to a complete stop in the safest location possible.

Before a vehicle with insufficient system air pressure can be moved, the spring parking brakes must be released by applying an external air source at the gladhands, or by manually caging the parking brake springs.

WARNING:

Do not release the spring parking brakes and then drive the vehicle. There would be no means of stopping the vehicle, which could result in serious personal injury or vehicle damage. Before releasing the spring parking brakes, make the connection to a towing vehicle or chock the tires.

After correcting the brake system problem, uncage the spring parking brakes before resuming normal vehicle operation.

Brake System Operation

Before driving your vehicle, allow time for the air compressor to build up a minimum of 100 psi (689 kPa) pressure in both the primary and secondary systems. Monitor the air pressure system by observing the air pressure gauges and the low-air-pressure warning light and buzzer. The warning light and buzzer shut off when air pressure in both systems reaches approximately 70 psi (483 kPa).

NOTE: The buzzer sounds only when the park brake is released.

IMPORTANT: Before driving the vehicle, secure all loose items in the cab so that they will not fly forward during a full brake application. Make sure all passengers are wearing seat belts.

During normal brake stops, depress the foot brake control pedal until braking action slows down the vehicle. Increase or decrease the pressure on the pedal so that the vehicle comes to a smooth, safe stop. Apply the spring parking brakes if parking the vehicle.

IMPORTANT: An air brake proportioning system may be used in tractor air brake systems when the vehicle is not equipped with antilock braking system (ABS).

When operating in bobtail mode, the rear brake chambers (on which the axle load has been greatly reduced) receive reduced (proportional) air pressure, while the front axle brake chambers receive full (normal) air pressure. This results in a different brake pedal "feel," as the pedal seems to require more travel and/or effort to slow or stop the vehicle. However, the air brake proportioning system actually improves vehicle control when the tractor is in bobtail mode.

When the tractor is towing a trailer, the rear brake chambers will receive full (normal) application air pressure.

When parking a vehicle attached to a trailer that does not have spring parking brakes, apply the tractor parking brakes. Chock the trailer tires before disconnecting the vehicle from the trailer.

WARNING:

If a trailer or combination vehicle is not equipped with spring parking brakes, do not park it by pulling out only the trailer air supply valve knob. This would apply only the trailer service brakes. If air were to bleed from the trailer brake system, the trailer brakes would release, possibly causing an unattended runaway vehicle.

NOTICE:

Never apply the service and spring parking brakes simultaneously. To do so transmits excessive input force to the brake components, which could damage or cause eventual failure of brake actuating components.

Brake Controls

The trailer brake lever (hand control valve) is used for applying the trailer brakes without applying the truck or tractor service brakes. It is usually mounted on the right-hand control panel. See Fig.269,Trailer Brake Lever. The valve can be partially or fully applied, but in any partially ON position it will be overridden by a full application of the service brake pedal.

Moving the lever down applies the trailer brakes, while moving it up releases the trailer brakes. The lever will automatically return to the up position when it is released.

WARNING:

Do not use the trailer service brakes for parking; they are not designed for this purpose. If air bleeds out of the trailer air tank during parking, the vehicle could roll, causing serious personal injury or property damage.

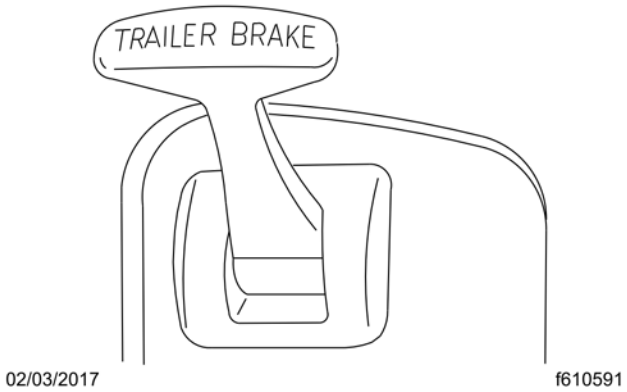

Fig 271, Trailer Brake Lever

The red octagonal-shaped knob in the control panel actuates the trailer air supply valve. See Fig.270,Brake Valve Knobs. After the vehicle's air hoses are connected to a trailer and the pressure in both air systems is at least 65 psi (448 kPa), the trailer air supply valve must be pushed in. It should stay in to charge the trailer air supply system and to release the trailer spring parking brakes.

Pull the trailer air supply valve out before disconnecting a trailer or when operating a vehicle without a trailer.

If pressure in both air systems drops to 20 to 45 psi (138 to 310 kPa), the red trailer air supply valve and yellow parking brake valve automatically pop out, applying both the tractor and trailer spring parking brakes. If the trailer is not equipped with spring parking brakes, the trailer service brakes are applied.

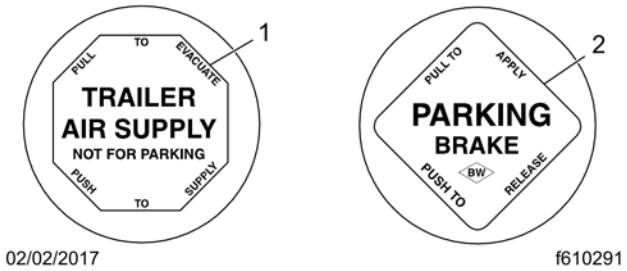

1. Trailer Air-Supply-Valve Knob
2. Parking-Brake-Valve Knob

Fig 272, Brake Valve Knobs

The yellow diamond-shaped knob in the control panel actuates the parking brake valve. See Fig.270,Brake Valve Knobs. Pulling out the parking brake valve applies both the tractor and trailer spring parking brakes and automatically causes the trailer air supply valve to pop out. Pushing in the parking brake valve releases the tractor parking brakes.

NOTICE:

Do not use the spring parking brakes if the service brakes are hot, such as after descending a steep grade. To do so could damage the brakes. Allow hot brakes to cool before using the spring parking brakes.

Do not use the spring parking brakes during freezing temperatures if the service brakes are wet. To do so could cause them to freeze. If the brakes are wet, drive the vehicle in low gear and lightly apply the brakes to heat and dry them.

If the trailer is not equipped with spring parking brakes, pulling out the parking brake valve applies the tractor spring parking brakes and the trailer service brakes. When the tractor and trailer parking brakes (or trailer service brakes) are both applied, the trailer brakes are released by pushing in the trailer air supply valve, leaving the tractor parking brakes applied. Air pressure in the primary or secondary reservoir must be at least 65 psi (447 kPa) before the tractor spring parking brakes, or the trailer service or spring parking brakes, can be released.

Automatic Slack Adjusters

Automatic slack adjusters should never be manually adjusted except during routine maintenance of the foundation brakes (e.g., replacing shoes), during slack adjuster installation, or in an emergency situation.

When the brake pushrod stroke exceeds the legal brake adjustment limit on a vehicle, there is likely a mechanical problem with the foundation brake components or the adjuster is improperly installed.

Visit a repair facility as soon as possible when brakes equipped with automatic slack adjusters are determined to be out of adjustment.

WARNING:

Manually adjusting an automatic slack adjuster to bring the pushrod stroke within legal limits is likely masking a mechanical problem. Adjustment is not a repair. Before adjusting an automatic slack adjuster, troubleshoot the foundation brake system and inspect it for worn or damaged components. Improperly maintaining the vehicle braking system may lead to brake failure, resulting in property damage, personal injury, or death.

14.02 Antilock Braking System (ABS)

The Meritor WABCO Antilock Braking System (ABS) is an electronic wheel speed monitoring and control system that works with the standard air brake system. ABS passively monitors vehicle wheel speed at all times, and controls wheel speed during emergency stops.

NOTICE:

An accumulation of road salt, dirt, or debris on the ABS tone wheels and sensors can cause the ABS warning light to come on. If the ABS light does come on, the tone rings and sensors should be inspected for corrosion and serviced if necessary. The service should include cleaning of the tone rings and sensors. If any tone ring on a vehicle shows severe corrosion, all tone rings on that vehicle should be replaced.

During winter months in areas where corrosive materials are used on the highways, periodically clean the underside of the vehicle, including the tone rings and sensors, to ensure proper ABS function and to protect the components from corrosion. Clean more frequently when unusually corrosive chemicals are being used.

IMPORTANT: For proper ABS system operation, do not change tire sizes. The sizes of the tires installed during production are programmed into the electronic control unit. Installing different-sized tires could result in a reduced braking force, leading to longer stopping distances.

ABS includes signal-generating tone wheels and sensors located in the wheel hubs of each sensed wheel. The sensors transmit vehicle wheel speed information to an electronic control unit, located in the vehicle electronics bay. The control unit's main circuit interprets the speed sensor signals and calculates wheel speed, wheel retardation, and a vehicle reference speed. If the calculations indicate wheel lockup, the main circuit signals the appropriate modulator valve to reduce braking pressure. During emergency braking, the modulator valve alternately reduces, increases, or maintains air pressure supply in the brake chamber to prevent front and rear wheel lockup.

The electronic control unit (ECU) also has a safety circuit that constantly monitors the wheel sensors, traction control valve (if equipped), modulator valves, and the electrical circuitry.

The ABS combines one front-axle control channel with one rear-axle control channel to form one control circuit. For example, the sensor and modulator valve on the left-front axle form a control circuit with the sensor and modulator valve on the right-rear axle. If, during vehicle operation, the safety circuit senses a failure in any part of the ABS, the driver display presents an ABS warning, the tractor warning lamp (TRACTOR ABS) illuminates, and the control circuit where the failure occurred is switched to normal braking action. See Table.36,Brake System Warnings, Indicators, and Messages. The remaining control circuit will retain the ABS effect. Even if the ABS is completely inoperative, normal braking ability is maintained. An exception would be if a modulator valve (or combination modulator valve) is damaged and inoperative. As these components are an integral part of the air brake system, normal braking may be impaired or inoperative.

During emergency or reduced-traction stops, fully depress the brake pedal until the vehicle comes to a safe stop. *Do not pump the brake pedal* . With the brake pedal fully depressed, the ABS will control all wheels to provide steering control and a reduced braking distance.

Although the ABS improves vehicle control during emergency braking situations, the driver still has the responsibility to change driving styles depending on existing traffic and road conditions. For example, the ABS cannot prevent an accident if the driver is speeding or following too closely.

Trailer ABS Compatibility

The ABS is designed to communicate with a trailer ABS, if they are compatible. Compatibility will result in the illumination of the TRAILER ABS lamp during vehicle start-up and fault detection. See Table.36,Brake System Warnings, Indicators, and Messages.

The TRAILER ABS lamp will not illuminate unless a compatible trailer is connected to the tractor. The dash-mounted lamp will operate as follows when a compatible trailer is properly connected to the tractor:

- When the ignition key is turned to the ON position, the TRAILER ABS lamp will illuminate momentarily, then turn off.
- If the lamp illuminates momentarily during vehicle operation, then shuts off, a fault was detected and corrected.
- If the lamp illuminates and stays on during vehicle operation, there is a fault with the trailer ABS. Repair the trailer ABS system immediately to ensure full antilock braking capability.

IMPORTANT: If a compatible trailer is connected, and the lamp is not illuminating momentarily when the ignition key is turned to the ON position, it is possible that the lamp is burnt out.

Automatic Traction Control

Vehicles with electronic engines and ABS may have Automatic Traction Control (ATC). On these vehicles, the ATC system automatically limits wheel spin during reduced-traction situations. (In normal braking applications, the standard air brake system is in effect.)

If a vehicle is equipped with automatic traction control, it means an additional solenoid valve is installed. During reduced-traction situations, the ATC solenoid valve controls air pressure to the modulator valves and they in turn increase, hold, or reduce pressure to the appropriate brake chambers to provide better traction whenever wheel spin occurs.

When the automatic traction control system is in the NORMAL mode, it will apply gentle braking to the spinning wheel, to feed power to the wheel(s) with better traction. If both wheels are spinning, the system will signal the engine to reduce power.

If the system detects wheel spin or a stability event, the wheel spin/stability telltale illuminates and an alert is shown on the driver display. See Table.36,Brake System Warnings, Indicators, and Messages.

Pressing the ATC SPIN switch (see Fig.271,ATC SPIN Switch) shuts ATC off and allows drive wheel spin. An alert is shown on the driver display.

Pressing the switch again, or cycling the ignition key, will cycle the system back to normal operation.

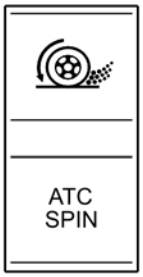

03/02/2016 f611333

Fig 273, ATC SPIN Switch

NOTICE:
The ATC spin feature is intended to be used under specific slippery conditions that require momentary increased wheel spin. Using this option for an extended period of time may damage the vehicle brake system.

After the ignition switch is turned on, the TRACTOR ABS lamp comes on for about three seconds. After three seconds, the warning light goes out if all of the tractor's ABS components are working.

IMPORTANT: If the ABS warning light does not work as described above, or comes on while driving, repair the ABS immediately to ensure full antilock braking capability.

Table 36, Brake System Warnings, Indicators, and Messages

Brake System Warnings, Indicators, and Messages				
Telltale	**Color**	**Description**		**Driver Display**
	Red	Low Brake Air Pressure (EPA10 and Newer)	Indicates air pressure in the primary or secondary reservoir has dropped below approximately 70 psi (483 kPa).	

BRAKE AIR	Red	Low Air Pressure (EPA10 and Newer)	Alternate low brake air pressure telltale. Indicates air pressure in the primary or secondary reservoir has dropped below approximately 70 psi (483 kPa).	06/30/2016 f611429
(P) PARK	Red	Parking Brake (EPA10 and Newer)	Indicates the parking brake is engaged.	N/A
ABS	Amber	Vehicle ABS	Momentary illumination indicates the vehicle ABS is engaged. Solid illumination indicates a problem with the vehicle ABS. Repair the ABS immediately to ensure full braking capability.	N/A
ABS	Amber	Trailer ABS	Momentary illumination indicates the trailer ABS is engaged. Solid illumination indicates a problem with the trailer ABS. Repair the ABS immediately to ensure full braking capability.	N/A
	Amber	Stability Event	Flashing indicates a stability event has been detected, and the ESC system is active. Solid illumination indicates a problem with the stability system. Repair the ESC system immediately to ensure full stability capability. For more information on the ESC system, see 6.01.01 General Information.	N/A
TC	Amber	Wheel Spin Event	Flashing indicates a wheel spin event has been detected, and the ATC system is active.	N/A

		ATC Deactivated	Indicates the ATC SPIN button has been pressed to allow wheel slip.	
	Green	Engine Brake	Indicates the engine brake is enabled.	N/A

Table 36, Brake System Warnings, Indicators, and Messages

14.03 Engine Brake

Each engine manufacturer uses a specific engine brake for their engine. Refer to the engine manufacturer's operation manual for details of their particular engine brake product.

Regardless of the manufacturer, the engine brake is operated with the principles outlined in here.

WARNING:

To avoid injury from loss of vehicle control, do not activate the engine brake system under the following conditions:

- on wet or slippery pavement, unless the vehicle is equipped with antilock braking system (ABS) and you have had prior experience driving under these conditions;
- when driving without a trailer or pulling an empty trailer;
- if the tractor drive wheels begin to lock, or there is fishtail motion after the engine brake is activated.

NOTE: When the engine brake is enabled, the engine brake lamp illuminates in the ICU. See Table.37,Brake System Warnings, Indicators, and Messages.

Whenever vehicle braking is required on good road conditions, the engine brake may be used in conjunction with the service brakes. There is no time limit for operation of the engine brake. However, an engine brake does not provide the precise control of, and is not a substitute for, service brakes.

WARNING:

Usage of the engine brake as the primary braking system can cause unpredictable stopping distances, that could result in personal injury or property damage. Service brakes are the primary vehicle braking system.

Since the engine brake is most effective at rated engine speed, gear selection is very important. Gearing down the vehicle within the limits of the rated engine speed makes the engine brake more effective. Recommended engine braking speed is above 1800 rpm and below the rated speed.

"Control speed" is the speed at which the engine brake performs 100 percent of the required downhill braking, resulting in a constant speed of descent. The control speed varies, depending on vehicle weight and the downhill grade.

For faster descent, select a higher gear than that used for control speed. Service brakes must then be used intermittently to prevent engine overspeed and to maintain desired vehicle speed.

For slower descent, select a lower gear, being careful not to overspeed the engine. Occasional deactivation of the engine brake may be necessary to maintain the designated road speed under these conditions.

If the engine is equipped with both cruise control and an engine brake, the engine brake can operate automatically while cruise control is activated. The maximum amount of braking is selected with the engine brake control. When the vehicle returns to the set cruise speed, the engine brake will turn off.

The engine brake will only operate when the accelerator and clutch pedals are fully released.

ABS has the ability to turn the engine brake off if wheel slip is detected. The engine brake will automatically turn back on once wheel slip is no longer detected.

Engine Brake Operation

NOTICE:
Do not allow the engine to exceed its governed speed, or serious engine damage could result.

NOTE: Depending on the brake type, the engine brake may be disabled when engine temperature falls below a set level.

The engine brake control is located on the right-hand steering column lever. At the top position, the engine brake is off, and at the three lower positions, the engine brake is on and the intensity (low, medium, high) increases with each step down. See Fig.272,Engine Brake Positions, Right-Hand Steering Column Lever.

NOTE: The cruise control system and safety systems may activate the engine brake regardless of the lever position.

NOTE: On vehicles equipped with a Detroit automated transmission, setting the engine brake with the cruise control set activates Deceleration Mode. Setting the cruise control while the engine brake is on activates Descent Control Mode. For information on these modes, see "Cruise Control" in 6.01.01 General Information.

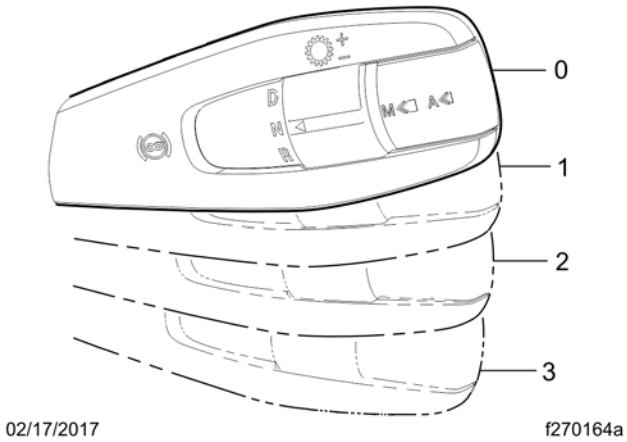

1. Off
2. Low
3. Medium
4. High

Fig 274, Engine Brake Positions, Right-Hand Steering Column Lever

Table 37, Brake System Warnings, Indicators, and Messages

Brake System Warnings, Indicators, and Messages				
Telltale	**Color**	**Description**		**Driver Display**
	Red	Low Brake Air Pressure (EPA10 and Newer)	Indicates air pressure in the primary or secondary reservoir has dropped below approximately 70 psi (483 kPa).	
	Red	Low Air Pressure (EPA10 and Newer)	Alternate low brake air pressure telltale. Indicates air pressure in the primary or secondary reservoir has dropped below approximately 70 psi (483 kPa).	 06/30/2016 f611429
	Red	Parking Brake (EPA10 and Newer)	Indicates the parking brake is engaged.	N/A
	Amber	Vehicle ABS	Momentary illumination indicates the vehicle ABS is engaged. Solid illumination indicates a problem with the vehicle ABS. Repair the ABS immediately to ensure full braking capability.	N/A
	Amber	Trailer ABS	Momentary illumination indicates the trailer ABS is engaged. Solid illumination indicates a problem with the trailer ABS. Repair the ABS immediately to ensure full braking capability.	N/A
	Amber	Stability Event	Flashing indicates a stability event has been detected, and the ESC system is active. Solid illumination indicates a problem with the stability system. Repair the ESC system immediately to ensure full stability capability. For more information on the ESC system, see 6.01.01 General Information.	N/A

	Amber	Wheel Spin Event	Flashing indicates a wheel spin event has been detected, and the ATC system is active.	N/A
		ATC Deactivated	Indicates the ATC SPIN button has been pressed to allow wheel slip.	
	Green	Engine Brake	Indicates the engine brake is enabled.	N/A

Table 37, Brake System Warnings, Indicators, and Messages

14.04 Winch Brake

NOTICE:
Due to the possibility of the winch brake failing and causing the vehicle to unexpectedly roll backwards, no one other than the operator should be in the cab while the winch brake is in use.

A winch brake is an optional accessory. If equipped, vehicles involved in winching applications, such as tow trucks, need the vehicle to remain stationary while applying a heavy pulling force. Park brakes apply pressure to the rear axles and may not be enough to hold the vehicle in position. A winch brake applies approximately 44 psi (303 kPa) to the forward axle to assist in keeping the vehicle stationary.

The winch brake operates under the following conditions:

- the engine is on;
- the park brake is set;
- the air pressure is greater than 100 psi (689 kPa) in both the primary and secondary systems.

To engage the winch brake, toggle up on the winch brake switch. See Fig.273,Winch Brake Switch.

Fig 275, Winch Brake Switch

The icon on the winch brake switch illuminates red and the application air gauge displays approximately 44 psi (303 kPa) while the winch brake is active. If an error occurs while engaging the winch brake, the icon on the switch flashes red and the application air gauge displays 0 psi (0 kPa).

To disengage the winch brake, press on the brake pedal while toggling up on the winch brake switch or changing gears.

15.01 Power Steering System 292

15. Steering System

15.01 Power Steering System

The power steering system includes the power steering gear, hydraulic hoses, power steering pump, reservoir, steering wheel and column, and other components.

The power steering pump, driven by the engine, provides the power assist for the steering system. If the engine is not running, there is no power assist.

WARNING:

Driving the vehicle without the power-assist feature of the steering system requires much greater effort, especially in sharp turns or at low speeds, doing so could result in an accident and possible injury.

If the power-assist feature does not work due to hydraulic fluid loss, steering pump damage, or another cause, bring the vehicle to a safe stop. Do not drive the vehicle until the cause of the problem has been corrected.

NOTICE:

Never steam clean or high-pressure wash the steering gear. Internal damage to gear seals, and ultimately the steering gear, can result.

Drivers should carefully use the power available with a power steering system. If the front tires become lodged in a deep hole or rut, drive the vehicle out instead of using the steering system to lift the tires out of the hole.

NOTICE:

Avoid turning the tires when they are against a curb, as this places a heavy load on steering components and could damage them.

16.01 Hold Function 295
16.02 Automated/Automatic Transmission Shift Control 296
16.02.01 Direction Switch 296
16.02.02 Mode Switch 299
16.02.03 Gear Switch 299
16.02.04 Engine Brake 302
16.02.05 Power Up and Shift into Gear 302
16.02.06 Gear Display 302
16.02.07 Selected Gear (Detroit and Eaton Transmissions) 303
16.02.08 Suggested Shift (Detroit and Eaton Transmissions) 303
16.03 Detroit™ Automated Transmission (DT12) 303
16.03.01 Driving Modes 303
16.03.02 Vocational Driving Modes 304
16.03.03 eCoast 306
16.03.04 Creep Mode 308
16.03.05 Clutch Abuse Protection 308
16.03.06 Engine Overspeed Alerts 309
16.03.07 Cruise Descent Control Mode 309
16.03.08 Hill Descent Upshift Feature 311
16.03.09 Low Transmission Air Warning 311
16.03.10 Auto Neutral Feature 312
16.04 Eaton Automated Transmissions 313
16.04.01 Automatic Mode (A) 313
16.04.02 Manual Mode (M) 314
16.04.03 Low (L) 315
16.04.04 Clutch Abuse Protection 315
16.04.05 Creep Mode 315
16.04.06 Engine Overspeed Protection 316
16.04.07 Shuttle Shifting 316
16.04.08 Auto Start Gear Selection and Override 316
16.04.09 Skip Shifting 316

16.04.10 Auto Neutral 316
16.04.11 Automatic Traction Control 316
16.04.12 Load-Based Shifting 316
16.04.13 Coasting 317
16.04.14 Transmission Low Air Warning 317
16.04.15 Transmission Prognostics 318
16.05 Allison Automatic Transmissions 318
16.05.01 General Information, Allison Transmissions 318
16.05.02 Operation Tips, Allison Transmissions 320
16.05.03 Automatic Mode (A) 320
16.05.04 Manual Mode (M) 321
16.05.05 Low (L) 321
16.05.06 Transmission Prognostics 322

16. Automated and Automatic Transmissions

16.01 Hold Function

The hold function eases the strain of driving in stop-and-go traffic by allowing the driver to "hold" the brake without constantly applying pressure to the brake pedal. The hold function is an extension of hill start aid (HSA).

To activate the hold function, bring the vehicle to a complete stop, then press the brake pedal further toward the floor. The HOLD telltale, shown in Fig.274,Brake Hold Active Telltale illuminates on the driver display to indicate the function is active and the vehicle's brake lights come on. The driver can then take their foot off the brake pedal without the service brakes releasing.

If the brake pedal is pressed down farther, air is added to the chamber, continuing the brake hold.

Fig 276, Brake Hold Active Telltale

To release the brake hold, do one of the following:

- Press the accelerator pedal.
- Engage the park brake.
- Press the brake pedal to full stroke and immediately release the brake pedal.

The hold function is deactivated when the HSA OFF switch is pressed to disable HSA.

The hold function cannot be engaged if any of the following are true:

- The anti-lock braking system was active in bringing the vehicle to a stop.
- The anti-lock braking system is in a fault state.
- The vehicle is in reverse gear.

If the hold function is active for four minutes, the window shown in Fig.275,Engage Park Brake Message - ICC5 appears on the ICU warning the driver to engage the park brake. An audible alarm activates at the same time and repeats every minute until the park brake is set.

Fig 277, Engage Park Brake Message - ICC5

The same warnings are triggered if the hold function is active and:

- The ignition is turned off without the park brake being set.
- The brakes are not strong enough to hold the vehicle in place and it starts rolling.

If a door is opened without the park brake being set when the hold function is active, the horn sounds and a visual warning activates on the driver display. If the seat occupancy sensor registers an empty seat under the same conditions, the same warnings are triggered. Warnings cease when the condition that triggered the warning is corrected.

16.02 Automated/Automatic Transmission Shift Control

16.02.01 Direction Switch

Vehicles with automated or automatic transmissions use the multifunction stalk switch control shown in Fig. 276,Automated/Automatic Transmission Shift Control and Fig.277,Engine Brake Positions. This control can be used to request manual shifts, change driving mode, and set engine brake levels. See Table.38,Functionality, Automated/Automatic Transmission Shift Control for an overview of control functionality.

Direction Switch

Use the direction switch to request drive (D), neutral (N), or reverse (R). See Fig. 276,Automated/Automatic Transmission Shift Control, ref. A.

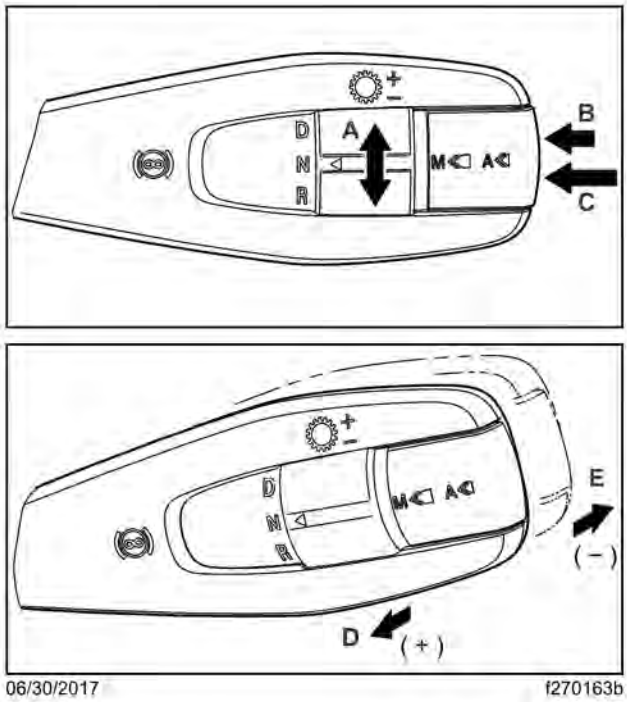

See Table for a description of control functionality.

A. Rotate for drive (D), neutral (N), or reverse (R).
B. Short press for automatic mode or switch between available modes.
C. Long press for manual mode.
D. Pull for upshift (+) request.
E. Push for downshift (-) request.

Fig 278, Automated/Automatic Transmission Shift Control

See Table for a description of control functionality.

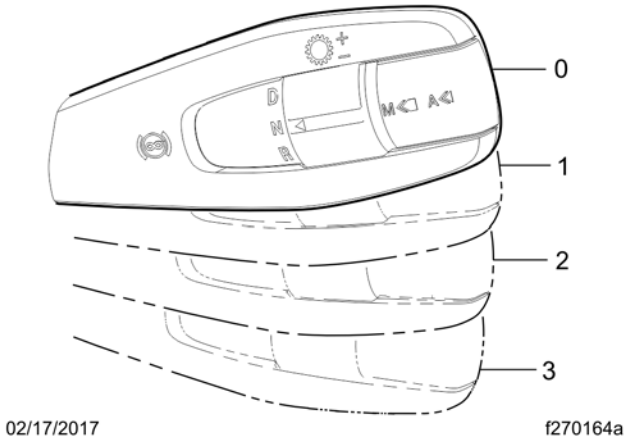

1. Off
2. Low
3. Medium
4. High

Fig 279, Engine Brake Positions

Table 38, Functionality, Automated/Automatic Transmission Shift Control

Functionality, Automated/Automatic Transmission Shift Control		
Function/Switch	Action/Position	Request
Direction	All Transmissions	
	D	Forward gears
	N	Neutral
	R	Reverse gears
Mode	Short press	**Detroit and Eaton:** Activate the automatic drive mode, or switch between available modes **Allison:** Switch between available shift modes.
	Long press	**Detroit and Eaton:** Activate the manual drive mode (if available) **Allison:** Switch between automatic and manual drive mode.
Gear(Detroit Automated Transmissions)	Detroit Automated Transmissions	
	Short pull on the lever	Upshift, single gear
	Pull on the lever in quick repetitions	Upshift, multiple gears
	Short push on the lever	Downshift, single gear
	Push on the lever in quick repetitions	Downshift, multiple gears
Gear (Eaton Automated Transmissions)	Eaton Automated Transmissions	

	Short pull on the lever	Upshift, single gear
	Pull on the lever in quick repetitions	Upshift, multiple gears
	Short push on the lever	Downshift, single gear
	Push on the lever in quick repetitions	Downshift, multiple gears
	While in automatic drive mode, long push on the lever	Downshift to low mode
	While in low mode, pull on the lever	Exits low mode and returns to automatic drive mode
	While in reverse mode, push on the lever	Selects deep reverse gear
	While in deep reverse gear, pull on the lever	Upshifts to standard reverse gear
Gear (Allison Automatic Transmissions)	Allison Automatic Transmissions	
	Short pull on the lever	Upshift, single gear
	Pull on the lever in quick repetitions	Upshift, multiple gears
	Short push on the lever	Downshift, single gear
	Push on the lever in quick repetitions	Downshift, multiple gears
	While in automatic drive mode, long push on the lever	Downshift to low mode
	While in low mode, pull on the lever	Exits low mode and returns to automatic drive mode
	While in reverse mode, push on the lever	Selects deep reverse gear (only on 7-speed 4000 Series transmissions)
	While in deep reverse gear (only on 7-speed 4000 Series transmissions), pull on the lever	Upshifts to standard reverse gear
Engine Brake*	Engine Brake Functions	
	Lever at position 0 (top)	Engine brake off
	Lever at position 1	Low intensity
	Lever at position 2	Medium intensity
	Lever at position 3 (bottom)	High intensity

Table 38, Functionality, Automated/Automatic Transmission Shift Control

* For functions with cruise control active, see 6.02.02 Multipurpose Camera 2 (MPC2).

16.02.02 Mode Switch

The driving mode can be changed using the Mode switch on the shift control. See Fig. 278,Automated/Automatic Transmission Shift Control, ref. B and C.

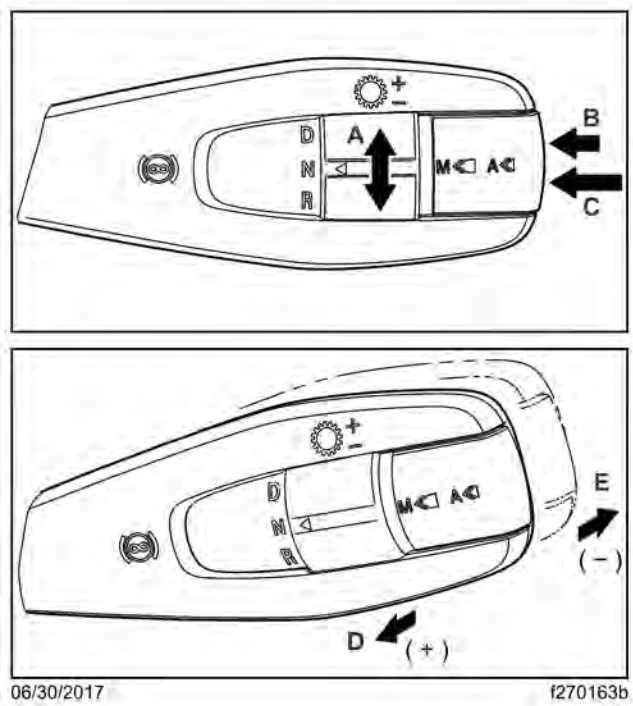

See Table for a description of control functionality.

A. Rotate for drive (D), neutral (N), or reverse (R).
B. Short press for automatic mode or switch between available modes.
C. Long press for manual mode.
D. Pull for upshift (+) request.
E. Push for downshift (-) request.

Fig 280, Automated/Automatic Transmission Shift Control

See Table for a description of control functionality.

16.02.03 Gear Switch

For automated and automatic transmissions, gear shifts can be requested manually; push the lever away to request a downshift, or pull the lever toward you to request an upshift, as shown in Fig. 279,Automated/Automatic Transmission Shift Control, ref. D and E. See Table.39,Functionality, Automated/Automatic Transmission Shift Control for more information about upshift and downshift requests.

Table 39, Functionality, Automated/Automatic Transmission Shift Control

Functionality, Automated/Automatic Transmission Shift Control		
Function/Switch	Action/Position	Request
Direction	All Transmissions	
	D	Forward gears
	N	Neutral

	R	Reverse gears
Mode	Short press	**Detroit and Eaton:** Activate the automatic drive mode, or switch between available modes **Allison:** Switch between available shift modes.
	Long press	**Detroit and Eaton:** Activate the manual drive mode (if available) **Allison:** Switch between automatic and manual drive mode.
Gear(Detroit Automated Transmissions)	Detroit Automated Transmissions	
	Short pull on the lever	Upshift, single gear
	Pull on the lever in quick repetitions	Upshift, multiple gears
	Short push on the lever	Downshift, single gear
	Push on the lever in quick repetitions	Downshift, multiple gears
Gear (Eaton Automated Transmissions)	Eaton Automated Transmissions	
	Short pull on the lever	Upshift, single gear
	Pull on the lever in quick repetitions	Upshift, multiple gears
	Short push on the lever	Downshift, single gear
	Push on the lever in quick repetitions	Downshift, multiple gears
	While in automatic drive mode, long push on the lever	Downshift to low mode
	While in low mode, pull on the lever	Exits low mode and returns to automatic drive mode
	While in reverse mode, push on the lever	Selects deep reverse gear
	While in deep reverse gear, pull on the lever	Upshifts to standard reverse gear
Gear (Allison Automatic Transmissions)	Allison Automatic Transmissions	
	Short pull on the lever	Upshift, single gear
	Pull on the lever in quick repetitions	Upshift, multiple gears
	Short push on the lever	Downshift, single gear
	Push on the lever in quick repetitions	Downshift, multiple gears
	While in automatic drive mode, long push on the lever	Downshift to low mode

	While in low mode, pull on the lever	Exits low mode and returns to automatic drive mode
	While in reverse mode, push on the lever	Selects deep reverse gear (only on 7-speed 4000 Series transmissions)
	While in deep reverse gear (only on 7-speed 4000 Series transmissions), pull on the lever	Upshifts to standard reverse gear
Engine Brake*	Engine Brake Functions	
	Lever at position 0 (top)	Engine brake off
	Lever at position 1	Low intensity
	Lever at position 2	Medium intensity
	Lever at position 3 (bottom)	High intensity

Table 39, Functionality, Automated/Automatic Transmission Shift Control

* For functions with cruise control active, see 6.02.02 Multipurpose Camera 2 (MPC2).

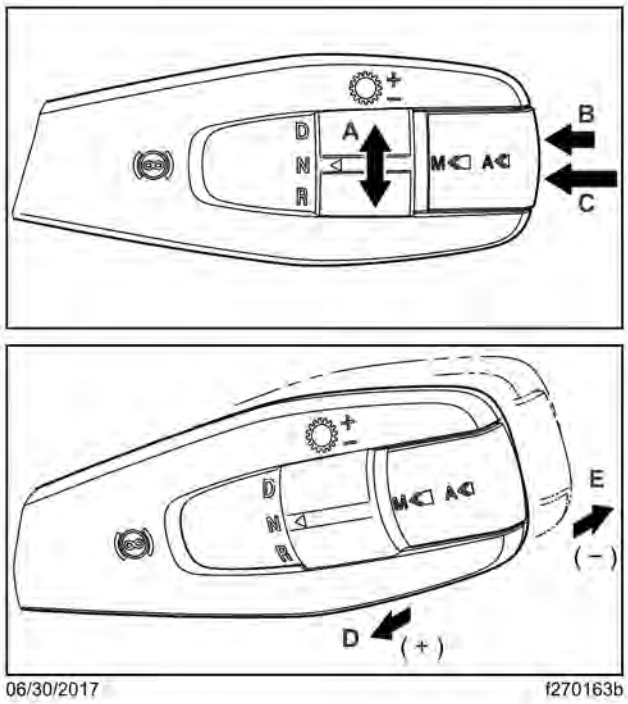

See Table for a description of control functionality.

A. Rotate for drive (D), neutral (N), or reverse (R).
B. Short press for automatic mode or switch between available modes.
C. Long press for manual mode.
D. Pull for upshift (+) request.
E. Push for downshift (-) request.

Fig 281, Automated/Automatic Transmission Shift Control

See Table for a description of control functionality.

16.02.04 Engine Brake

The engine brake is controlled by the lever position, shown in Fig.280,Engine Brake Positions. At the top position, the engine brake is off, and at the three lower positions, the engine brake is on and the intensity (low, medium, high) increases with each step down. For more information about using the engine brake, see .

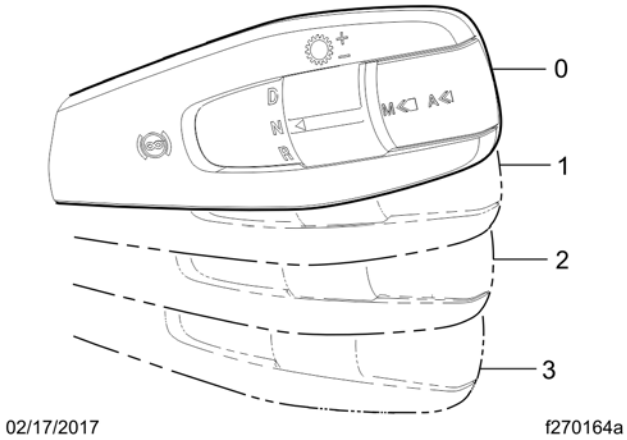

1. Off
2. Low
3. Medium
4. High

Fig 282, Engine Brake Positions

NOTE: Using the engine brake with cruise control can be used to activate Descent Control Mode or Deceleration Mode. For more information, see ‘Cruise Control’ in 6.02.02 Multipurpose Camera 2 (MPC2).

16.02.05 Power Up and Shift into Gear

1. With the parking brake set and Neutral (N) selected on the shift control, turn the ignition switch to the ON position.
2. Start the engine.
3. Apply the service brake.
4. Select the desired starting gear.
5. Release the parking brake.
6. Release the service brake and apply the accelerator.

16.02.06 Gear Display

The current transmission gear and driving mode are displayed in the static menu at the bottom of the driver display screen. See Fig.281,Typical Gear Display (Detroit and Eaton).

1. Suggested Shift
2. Current Gear
3. Driving Mode

Fig 283, Typical Gear Display (Detroit and Eaton)

16.02.07 Selected Gear (Detroit and Eaton Transmissions)

If the selected gear is different than the current gear for longer than a half second, the current gear display will flash and the selected gear value will be shown. Once the current gear and selected gear match, the selected gear display disappears and the current gear display stops flashing.

16.02.08 Suggested Shift (Detroit and Eaton Transmissions)

In Manual mode only (if available), a suggested shift is displayed to indicate the most economical gear available. The suggested shift is the number of up or down arrows from the current gear with a maximum of three up or down arrows.

16.03 Detroit™ Automated Transmission (DT12)

16.03.01 Driving Modes

Detroit transmissions have twelve forward gears and up to four reverse gears that can be shifted automatically or manually. Shifting and clutch actuation are computer controlled, and there is no clutch pedal needed to operate the vehicle. Automatic shifts are selected for fuel economy or engine power. Manual shifts can be requested with the shift control and the transmission ECU grants them when conditions permit. In all cases, shifts depend on the following factors: engine speed, accelerator pedal position, service brake usage, engine brake operation, vehicle load status, and road conditions.

NOTE: To avoid potential engine stall risk or unexpected shifting, use the interaxle differential lock when the vehicle is operated in slippery conditions. See the **Drive Axles** chapter for information about the interaxle differential lock.

There are three driving modes: Manual, Automatic Economy, and Automatic Performance. To activate the manual drive mode, press and hold the mode switch briefly. Press the switch quickly to activate the automatic drive mode or change between modes. See Fig. 282,Automated/Automatic Transmission Shift Control.

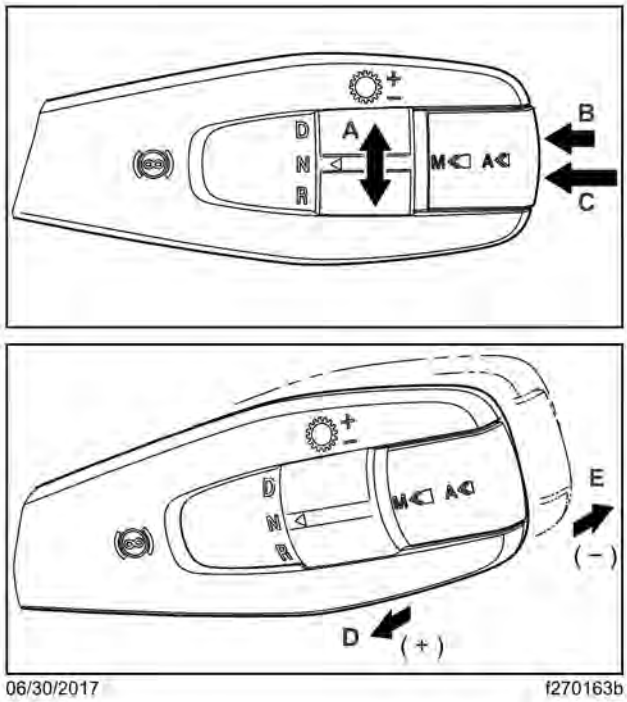

See Table for a description of control functionality.

A. Rotate for drive (D), neutral (N), or reverse (R).
B. Short press for automatic mode or switch between available modes.
C. Long press for manual mode.
D. Pull for upshift (+) request.
E. Push for downshift (-) request.

Fig 284, Automated/Automatic Transmission Shift Control

See Table for a description of control functionality.

In Automatic Economy mode, gear shifts are designed for saving fuel. In Automatic Performance mode, gear shifts are designed for higher performance and are made at higher engine speeds. In manual mode, gear shifts are requested manually.

NOTE: In Automatic Performance mode, the transmission will automatically change to Automatic Economy mode if it hasn't received a request for more power in several minutes, unless current road conditions require higher engine performance.

16.03.02 Vocational Driving Modes

The DT12 transmission can be equipped with a number of vocational modes, including Off-Road, Paver, and Rock Free.

Off-Road Mode

Off-Road mode is for extreme road conditions and features fewer shifts for improved traction and better driver control, later upshifts on partial throttle to hold gears longer, and earlier downshifting during service braking.

If equipped, this mode can be accessed by short presses on the mode switch on the shifter stalk. See Fig. 285,Automated/Automatic Transmission Shift Control.

The ICUC will display "offroad" on the Home screen when this option is selected. See Fig.283,Off-Road Mode Notice.

1. Transmission Mode

Fig 285, Off-Road Mode Notice

Creep mode is disabled in Off-Road mode to protect clutch life.

Paver Mode

When paving a road, the paving machine pushes the dump truck before it as the truck supplies asphalt to the machine. Paver Mode allows the dump truck to shift from Neutral to Drive without depressing the brake pedal; depressing the brake pedal causes the paver to stop and a bump to form in the road.

Paver mode can be accessed by either pushing down or pulling up on the shifter stalk and rotating the direction switch from N to D.

Rock Free Mode

Rock Free mode allows the driver to free a stuck vehicle by pressing and releasing the accelerator pedal and causing the vehicle to rock. Rock Free mode causes faster and more aggressive clutch opening and closure, which creates increased momentum and traction compared to moving from D to R. It also removes stress on the drive line caused by moving from D to R.

To operate Rock Free mode:

1. Stop the vehicle and press the Rock Free switch on the dash. See Fig. 285,Automated/Automatic Transmission Shift Control.
2. Press the accelerator to engage the clutch and gain momentum.
3. Remove foot from the accelerator to disengage the clutch.
4. Repeat engaging and disengaging the clutch to cause a rocking motion.

Fig 286, Rock Free Dash Switch

Rock Free mode can be disengaged manually by pressing the Rock Free dashboard switch.

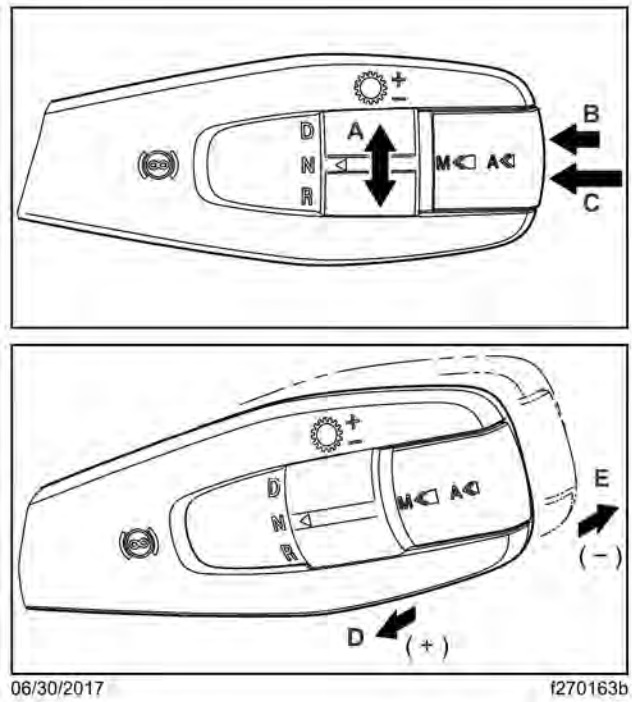

See Table for a description of control functionality.

A. Rotate for drive (D), neutral (N), or reverse (R).
B. Short press for automatic mode or switch between available modes.
C. Long press for manual mode.
D. Pull for upshift (+) request.
E. Push for downshift (-) request.

Fig 287, Automated/Automatic Transmission Shift Control

See Table for a description of control functionality.

16.03.03 eCoast

control automatically shifts the transmission to neutral to coast at speeds of approximately 50 mph (80 km/h) and above. However, the vehicle can coast down to 45 mph (72 km/h). An "E" shows in the gear display when eCoast is in effect. See Fig.286,eCoast Display.

Fig 288, eCoast Display

NOTE: Upshift and downshift arrows are not shown when "E" is shown in the gear display.

To turn eCoast on or off, navigate to the transmission settings screen. See Fig.287,eCoast and Creep Mode On/Off Screen.

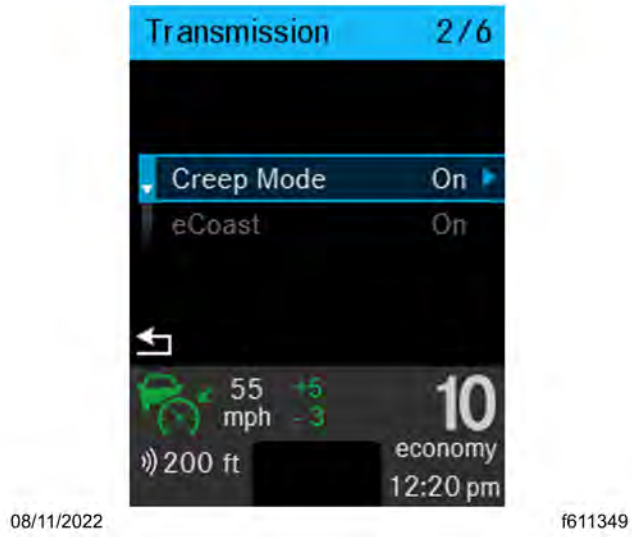

Fig 289, eCoast and Creep Mode On/Off Screen

The eCoast function is not active when any of the following occur:

- the accelerator pedal is pressed.
- vehicle acceleration rate is exceeded.
- the service brake pedal is pressed.
- the engine brake is in use.

- cruise control brakes or accelerates.
- vehicle speed exceeds the cruise control set speed by more than approximately 4 mph (6 km/h).
- the speed limiter is active and the maximum speed set is exceeded.
- diesel particulate filter (DPF) regeneration occurs.

NOTE: eCoast availability and the On/Off screen are customer-selectable parameters. To enable or disable eCoast, see an authorized Freightliner service facility.

16.03.04 Creep Mode

Creep mode allows the vehicle to be maneuvered at very slow speeds. To activate Creep mode for the first time within the current driving cycle, press the accelerator pedal to launch the vehicle, thereby modulating the clutch and allowing it to slip. Following this and for the duration of the current driving cycle, Creep mode is active.

Once the vehicle is stopped via the service brakes, the vehicle will begin to creep again, without the accelerator pedal actuation, as soon as the service brakes are released.

To begin using Creep mode (once active) from a parked position, shift from neutral to either drive or reverse, release the service brakes, and briefly depress the accelerator pedal. The vehicle's urge to move can then be felt.

If creep is active and no acceleration is achieved, then Creep mode will abort. A display message notifies the operator when Creep mode is about to be aborted.

IMPORTANT: When slowing down from higher speeds in drive or reverse, remember that Creep mode will be in effect at lower speeds. Use the service brakes to stop the vehicle.

To turn Creep Mode on or off, navigate to the transmission settings screen (if available). See Fig. 288,eCoast and Creep Mode On/Off Screen.

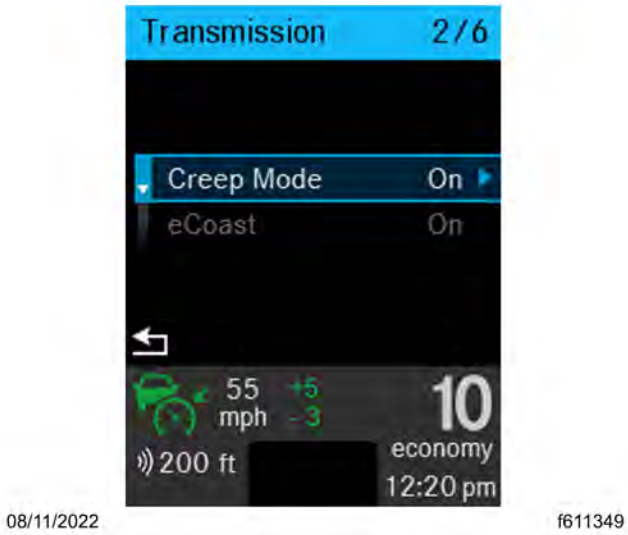

Fig 290, eCoast and Creep Mode On/Off Screen

NOTE: Creep mode availability and the On/Off screen are customer-selectable parameters. To enable or disable creep mode, see an authorized Freightliner service facility.

16.03.05 Clutch Abuse Protection

A vehicle equipped with a Detroit transmission does not have a clutch pedal, but still has a clutch that is operated automatically and can be damaged by abusive driver actions. To protect the clutch, the vehicle has a clutch abuse protection system

that alerts the driver and restricts functionality when needed. Extended periods in creep mode, slipping the clutch (using the accelerator pedal to hold the vehicle on a hill, for example), and high clutch temperatures can activate the clutch abuse protection system. A display message notifies the operator when the protections are needed.

NOTICE:
To hold the vehicle stationary on an uphill slope, use the service brakes, not the accelerator pedal. Using the accelerator pedal can overheat and damage the clutch. To start moving, use the accelerator pedal and release the brakes as the vehicle begins to move.

There are three clutch abuse protection levels. At each, the driver is alerted and functionality is modified; see Table 40, Clutch Abuse Alerts and Protections.

- To avoid clutch overheating, follow these tips:
- To hold the vehicle stationary on an uphill slope, use the service brakes, not the accelerator pedal.
- To start moving on an uphill slope, use the accelerator pedal and release the brakes as the vehicle begins to move.
- When hooking up to a trailer, ensure the trailer is high enough to back under, and use first gear reverse.
- Avoid starting in higher gears, and start in first gear when a trailer is attached.
- Ensure trailer brakes have had time to completely release prior to starting.
- Do not use creep mode for an extended period. Stop or adjust the vehicle speed when warned to deactivate creep mode.

Table 40, Clutch Abuse Alerts and Protections

Alert Level	Alert	Protections		
		Highest Start Gear	Creep Mode	Clutch Function
1	Heavy clutch load message	1	No restriction	Normal function
2	Heavy clutch load message	1	Disabled	Normal function
3	Clutch overload message and buzzer	1	Disabled	If the accelerator pedal is depressed, the clutch closes at fixed rate. If the accelerator pedal is released, the clutch opens at fixed rate.

Table 40, Clutch Abuse Alerts and Protections

16.03.06 Engine Overspeed Alerts

To help protect the engine, the system has display messages to notify the operator when the engine has exceeded certain thresholds and needs to be slowed down before significant engine damage occurs. There are two warnings, one at about 2300 rpm and another at 2500 rpm, indicated with messages and a fault code.

16.03.07 Cruise Descent Control Mode

The Cruise Descent Control mode helps control the vehicle and engine speed when descending a grade.

NOTE: Before engaging Cruise Descent Control, determine an appropriate speed for the vehicle load and grade of the road.

To activate the Cruise Descent Control mode, manually set the engine brakes with the shifter stalk and, while the engine brakes are actively working, set cruise to the desired descent speed. A Cruise Descent Control mode engaged icon will appear on the ICUC screen showing it is active. See Fig.289,Cruise Descent Control Active.

1. Icon Showing Cruise Descent Control Mode Engaged

Fig 291, Cruise Descent Control Active

The Cruise Descent Control mode will attempt to manage the vehicle's speed by varying the engine brake level.

The driver should be ready to intervene by applying the service brakes if the grade is too steep and the vehicle is traveling too fast. Applying the service brake to slow the vehicle will not cancel cruise control. Once the service brake is released, the vehicle speed becomes the new Cruise Descent Control set speed. A pop-up will appear on the instrument cluster screen to notify the driver of the new speed. See Fig.290,New Descent Mode Set Speed Pop-Up.

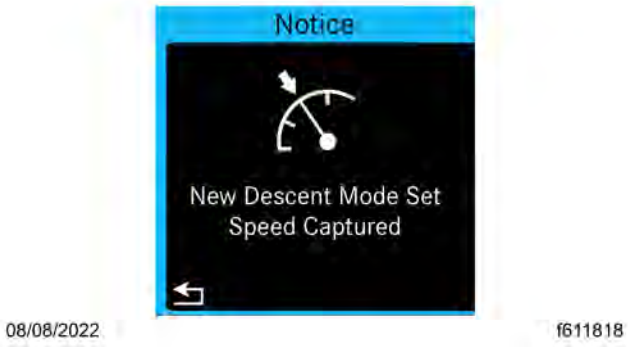

Fig 292, New Descent Mode Set Speed Pop-Up

When the vehicle's descent is complete, return the engine brake stalk to the OFF/Auto position. At this point the Cruise Descent Control set speed will become the new cruise speed.

16.03.08 Hill Descent Upshift Feature

NOTE: It is critical that the driver maintains complete control over the vehicle at all times.The proper speed, and gear if in manual mode, should be selected before the crest of any hill to ensure a safe descent. The driver should apply engine and service brakes appropriately during any descent.

If the feature is enabled, the Detroit™ automated transmission (DT12) is capable of upshifting automatically when descending grades. When the vehicle is descending without engine or service brake application, the DT12 will upshift at 2000 rpm. If the engine or service brake is applied during descent, the DT12 will upshift at 2400 rpm.

16.03.09 Low Transmission Air Warning

CAUTION:
If the yellow "Caution: Transmission Air Supply Low" popup appears while the vehicle is in operation, slow down, safely pull the vehicle off the road, then correct the problem.

Pneumatic controls are used to shift the transmission. If there is inadequate air pressure, a warning is displayed and the quality of gear shifts may be degraded. See Fig.291,Low Transmission Air Pressure Pop-up. Wait for air pressure to build before operating the vehicle.

Fig 293, Low Transmission Air Pressure Pop-up

CAUTION:
If the red "Warning: Transmission Will Not Shift" popup appears while the vehicle is in operation, choose the safest location available to pull the vehicle off the road. Prepare for the vehicle to be immobile if the problem cannot be resolved.

If a severe loss of air pressure occurs, a red warning pop-up will appear and the transmission will not shift. See Fig. 292,No Transmission Air Pressure Pop-up.

Fig 294, No Transmission Air Pressure Pop-up

Table 41, Clutch Abuse Alerts and Protections

Clutch Abuse Alerts and Protections				
Alert Level	**Alert**	**Protections**		
		Highest Start Gear	**Creep Mode**	**Clutch Function**
1	Heavy clutch load message	1	No restriction	Normal function
2	Heavy clutch load message	1	Disabled	Normal function
3	Clutch overload message and buzzer	1	Disabled	If the accelerator pedal is depressed, the clutch closes at fixed rate. If the accelerator pedal is released, the clutch opens at fixed rate.

Table 41, Clutch Abuse Alerts and Protections

16.03.10 Auto Neutral Feature

WARNING:
Do not leave the driver's seat without placing the shift stalk lever in the neutral position and applying the parking brake. Failure to do so could cause property damage and personal injury.

The auto neutral feature allows the transmission to shift out of gear, and gives visual and audible warnings to indicate pending and completed shifts. After being stopped with the engine idling, and the direction switch in drive or reverse, the warning buzzer sounds and the gear position display will show a flashing N, indicating an impending shift to neutral. Once neutral is achieved, a second short activation of the warning buzzer indicates the transmission is now in neutral.

WARNING:
If the transmission does not completely switch to neutral before engine shutdown, the engine will not restart until the transmission can complete the shift to neutral.

If the engine is turned off while the transmission is in gear, the display will flash 'Shift Into Neutral', and a long activation of the warning buzzer indicates the transmission has tried to shift into neutral during the shutdown process. It is possible the transmission was not able to achieve a neutral gear position, and the driver should turn the ignition back on to confirm the transmission is not still in gear. See Table.42, **Control Options for Auto Neutral Activation** for conditions and indicators that the driver may experience.

Table 42, Control Options for Auto Neutral Activation

Control Options for Auto Neutral Activation			
Ignition Key Position	ON with Engine Idling		Recently Switched OFF
Park Brake Position	ON	OFF	ON or OFF
Process Indicators			
Gear Display	Fast flashing 'N' (short duration)	Flashing 'N' (long duration)	Shift into neutral
Activation Delay	Five seconds	Ten minutes	Zero seconds
Buzzer Activation Length	Short activation	Short activation	Long activation
Transmission Response			
Actual Gear Position	Neutral, at second buzzer	Neutral, at second buzzer	Unknown (in gear or neutral)

Table 42, Control Options for Auto Neutral Activation

Table 15.3, Control Options for Auto Neutral Activation

16.04 Eaton Automated Transmissions

16.04.01 Automatic Mode (A)

Eaton automated transmissions use shift selection software and electric clutch actuation; a clutch pedal is not needed to operate the vehicle. These transmissions use the multi-function stalk switch, shown in Fig. 293,Automated/Automatic Transmission Shift Control, to select mode, direction, neutral, low, and to make manual shifts. To know what gear the transmission is in, see the driver display. Forward shifts can be made either manually or automatically.

In automatic drive mode, upshifts and downshifts are made by the transmission without driver intervention.

Use the mode switch on the shift control to select the automatic mode (A). Rotate the D/N/R switch to drive (D), and press down on the throttle pedal. The transmission will shift automatically.

NOTE: If attempting to select a non-neutral mode without applying the service brakes, the transmission will not shift into gear. To shift into gear, select neutral, apply the service brakes, and select the desired mode again.

In drive, the start gear is automatically selected. The selected start gear can vary depending on several vehicle inputs such as load, grade, and axle/transmission ratio. The start gear can be changed using the shift control, provided the selected gear would allow the vehicle to launch without damaging the transmission. If the start gear is changed using the shift control, it will be the default until the vehicle is powered down or the selection is changed again manually.

IMPORTANT: Prior to ascending a steep grade, either reduce the default start gear by one (using the shift control) or apply full throttle for the duration of the grade so the vehicle maintains the proper engine and vehicle speed during the entire grade.

In drive, the transmission automatically performs upshifts and downshifts. However, when the transmission is near the shift point, the shift can be forced using the upshift or downshift function of the shift control.

NOTE: The transmission may deny a shift while ascending or descending a grade if the load of the vehicle and grade of the terrain in combination with the drivetrain ratio and engine torque fall outside of the acceptable range to perform a shift. If the shift is denied, a tone will sound.

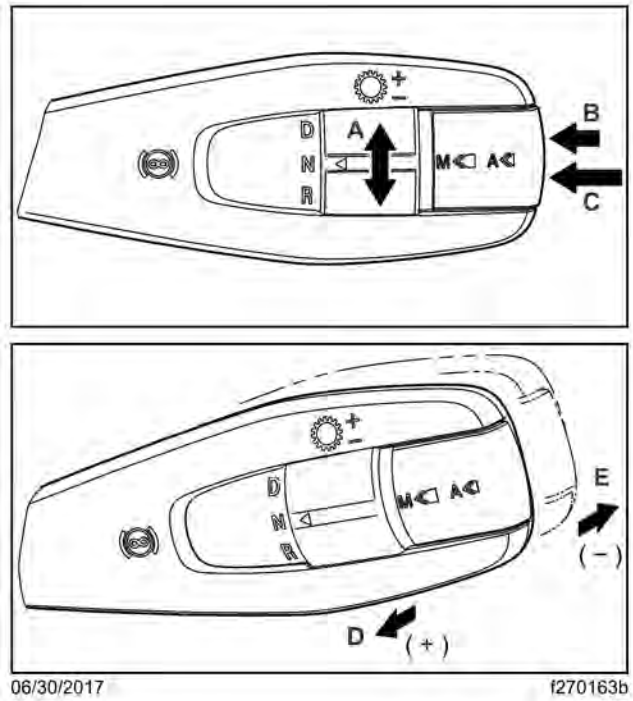

See Table for a description of control functionality.

A. Rotate for drive (D), neutral (N), or reverse (R).
B. Short press for automatic mode or switch between available modes.
C. Long press for manual mode.
D. Pull for upshift (+) request.
E. Push for downshift (-) request.

Fig 295, Automated/Automatic Transmission Shift Control

See Table for a description of control functionality.

16.04.02 Manual Mode (M)

In manual mode, the driver requests upshifts and downshifts instead of letting the Eaton transmission select them automatically. Manual shifting may be helpful when traversing a work site, railroad tracks, or steep grades, for example.

Use the mode switch on the shift control to select the manual mode (M). To drive forward, rotate the D/N/R switch to drive (D), and press down on the throttle pedal. To shift up, pull the lever up (towards you); to shift down, push the lever down (away from you). The system holds the current gear unless a shift is requested or if the system initiates a manual mode override.

NOTE: The transmission may deny a shift while ascending or descending a grade if the load of the vehicle and grade of the terrain in combination with the drivetrain ratio and engine torque fall outside of the acceptable range to perform a shift. If the shift is denied, a tone will sound.

NOTE: If attempting to select a non-neutral mode without applying the service brakes, the transmission will not shift into gear. To shift into gear, select neutral, apply the service brakes, and select the desired mode again.

Manual Mode Override

The system is equipped with a manual mode override function. If the vehicle is being ‘back driven’ (for example, descending a grade and the engine speed is excessively high), the system will upshift automatically. Also, if the start gear is changed and it causes the engine to lug at takeoff, the system will override the current position and select the best available gear.

16.04.03 Low (L)

Use low when wanting to maximize engine braking and minimize the use of the brake pedal—for example, when driving down long grades or when coming to a stop. To select low, push down on the multi-function stalk switch, and hold in the down-shift position for half a second or more. The lowest available start gear will be selected (the starting gear cannot be changed in low).

If low is selected while moving, the transmission will not upshift (unless the system initiates a low override). The system will downshift at the earliest opportunity to provide maximum engine braking.

NOTE: If attempting to select a non-neutral mode without applying the service brakes, the transmission will not shift into gear. To shift into gear, select neutral, apply the service brakes, and select the desired mode again.

Low Override

The system is equipped with a low override function. If the vehicle is being ‘back driven’ (for example, descending a grade and the engine speed is excessively high), the system will upshift automatically. Also, if the start gear is changed and it causes the engine to lug at takeoff, the system will override the current position and downshift.

16.04.04 Clutch Abuse Protection

Although a vehicle equipped with an Eaton automated transmission uses an automated clutch, the clutch can still overheat and slip with improper use. The clutch abuse protection feature helps protect the clutch if the automated clutch starts to overheat. When the clutch abuse protection feature initiates and sounds a warning tone, full clutch actuation must be completed quickly. If it is not completed quickly enough, the system will either open the clutch (if the throttle pedal is not being pressed) or close the clutch (if the throttle pedal is being pressed). If the abuse continues, the system will open the clutch and take away throttle control briefly to allow the clutch to cool down.

To protect the clutch:

- Select the lowest possible start gear for the application.
- Use creep mode when appropriate.
- Use the service brakes and the Hill Start Aid when launching on a grade.
- Minimize the time it takes to engage the clutch from rest.
- Do not use the throttle to hold the vehicle on a grade; use the service brakes.
- Do not use the throttle to stop roll back on an incline after Hill Start Aid disengages; use the service brakes, and then relaunch.
- Do not continually start and stop, especially when loaded; use a lower gear or creep mode.

16.04.05 Creep Mode

The Creep Mode function allows the vehicle to maintain a constant speed at engine idle without the driver holding the throttle pedal position. This mode is useful for very low-speed maneuvering and applications where steady vehicle speed is required.

The vehicle speed is determined by the selected gear ratio operating at governed low engine idle speed. Eaton allows you to continue in creep mode in any of their selectable start gears: 1st through 5th.

The transmission will downshift or exit Creep Mode to prevent stalling if the engine lugs due to load conditions.

By default, Creep Mode can be activated while in Manual Mode or Low. Eaton's ServiceRanger diagnostic software can be used to enable Creep Mode in Automatic Mode and/or Reverse.

Engaging Creep Mode

To engage Creep Mode:

1. Select Low, Manual, or Automatic Mode, and the desired gear (while stopped or moving).
2. Release the brake pedal. The vehicle will continue moving at governed low engine idle speed.

Exiting Creep Mode

To exit Creep Mode, apply the brake or throttle pedal.

NOTE: The transmission will exit Creep Mode if the engine lugs 150 rpm below the governed low engine idle speed. In this case, a lower gear should be selected if available.

16.04.06 Engine Overspeed Protection

The system will upshift if necessary to prevent engine overspeed in drive, manual, and low.

16.04.07 Shuttle Shifting

Shuttle shifting from reverse to any forward mode is only allowed if the vehicle speed is approximately zero.

16.04.08 Auto Start Gear Selection and Override

The transmission uses various inputs to automatically select the best start gear in drive and manual. This selection can be changed using the shift control; however, if the selection requested could cause damage or engine lugging, the request will be denied and a tone will sound.

16.04.09 Skip Shifting

When appropriate, the transmission may skip shift in drive. When prevailing conditions like load and grade allow, skip shifts can be performed in manual mode using the SmartShift control.

16.04.10 Auto Neutral

An Eaton automated transmission system will automatically shift to neutral if the vehicle is left in drive and the parking brake is set. ‘AN’ will show on the gear display. To re-engage the transmission, select neutral and then either drive or reverse on the shift control (it will re-engage regardless of whether the parking brake is released).

16.04.11 Automatic Traction Control

An Eaton automated transmission system requires the automatic Traction Control (ATC) option to be enabled when driving in soft soil/sand to prevent wheel slippage and shifting issues.

With the ATC enabled, the system will engage the brakes on the wheel or side that the wheel slip is occurring to help the vehicle gain traction. The point at which the traction control will actuate the braking system increases with throttle: low throttle allows the system to brake the wheels earlier; heavy/full throttle raises the point of the acceptable wheel slip.

Adhere to the following points when driving with ATC enabled:

- If using automatic mode in soft soil and/or sand, maintain the engine speed between 1000 and 1300 rpm to prevent unnecessary upshifting.
- If using manual mode in soft soil and/or sand, do not attempt an upshift and try to maintain the current gear.
- If the vehicle comes to a stop in the sand it may be necessary to back up prior to attempting forward movement.

To disable the ATC, depress the ATC switch. For more information, see 5.01 Ignition Switch. This mode allows for the drive axle wheels to spin.

16.04.12 Load-Based Shifting

An Eaton automated transmission system is adaptive and will change the shift points based on grade, engine rpm, throttle position, and vehicle load. After changing loads or powering up, the system needs to relearn these inputs for the first few shifts to make the proper adjustments.

16.04.13 Coasting

When coasting to a stop on level terrain, the transmission system may not downshift into the lower gears. It will select a gear after the throttle is applied.

16.04.14 Transmission Low Air Warning

CAUTION:

If the yellow ‘Caution: Transmission Air Supply Low’ popup appears while the vehicle is in operation, slow down, safely pull the vehicle off the road, then correct the problem.

Pneumatic controls are used to shift the transmission. If there is inadequate air pressure, a yellow caution pop-up will appear and the quality of gear shifts may be degraded. See Fig.294,Low Transmission Air Pressure Pop-up Wait for air pressure to build before operating the vehicle.

CAUTION:

If the red ‘Warning: Transmission Will Not Shift’ popup appears while the vehicle is in operation, choose the safest location available to pull the vehicle off the road. Prepare for the vehicle to be immobile if the problem cannot be resolved.

If a severe loss of air pressure occurs, a red warning pop-up will appear and the transmission will not shift. See Fig. 295,No Transmission Air Pressure Pop-up

Fig 296, Low Transmission Air Pressure Pop-up

Fig 297, No Transmission Air Pressure Pop-up

16.04.15 Transmission Prognostics

The Eaton Ultrashift clutch requires the application of grease for maintenance.

The Eaton transmission prognostics display can be found by navigating to the maintenance screens in the driver display. The screen will state if the Grease Interval is OK or if grease needs to be added. See Fig. 296,Eaton Transmission Prognostics.

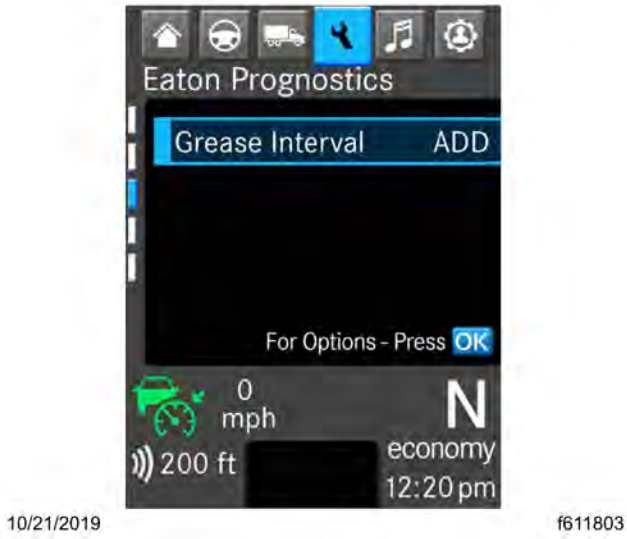

Fig 298, Eaton Transmission Prognostics

If the system status cannot be read, the message "SNA" displays.

16.05 Allison Automatic Transmissions

16.05.01 General Information, Allison Transmissions

Refer to the Allison website for additional information: see www.allisontransmission.com.

Allison transmissions have electronic shift controls that can be programmed to allow the use of different numbers of geared speeds. For instance, the transmission can be programmed to operate as a 4-speed, 5-speed, or 6-speed unit in the 'primary' shift mode. If needed, a 'secondary' shift mode can be programmed to provide another shift configuration to optimize

vehicle use under different operating conditions. To activate a secondary shift mode, or other special functions programmed into the electronic control unit (ECU), briefly depress the mode switch on the multi-function stalk switch control; see Fig. 297,Automated/Automatic Transmission Shift Control, item 3.

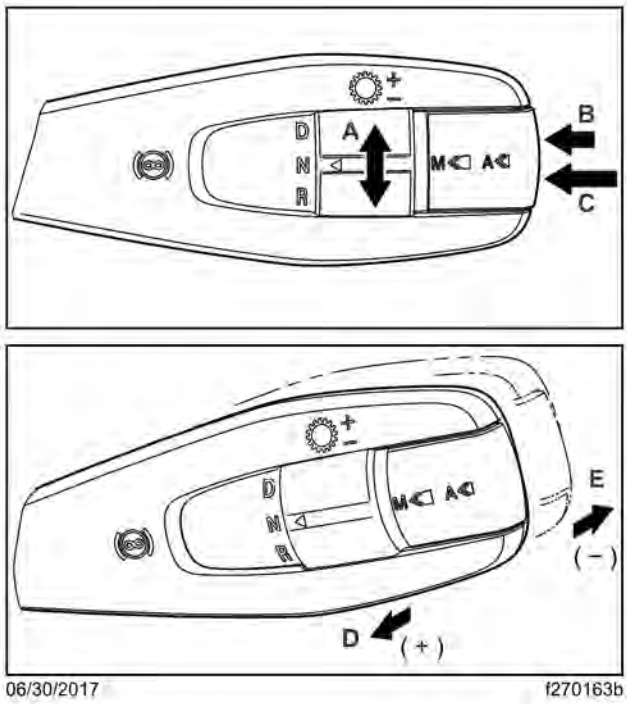

NOTE: See Table for a description of control functionality.

A. Rotate for drive (D), neutral (N), or reverse (R).
B. Short press for automatic mode or switch between available modes.
C. Long press for manual mode.
D. Pull for upshift (+) request.
E. Push for downshift (-) request.

Fig 299, Automated/Automatic Transmission Shift Control

These transmissions use the multi-function stalk switch to select mode, direction, neutral, low, and to preselect lower ranges. The current gear, highest available gear, and mode are shown in the driver display; see Fig. 298,Allison Gear Display in Automatic Mode. Forward shifts can be made either automatically or by using Manual mode.

1. Current Gear
2. Highest Gear Available
3. Mode

Fig 300, Allison Gear Display in Automatic Mode

16.05.02 Operation Tips, Allison Transmissions

Refer to the Allison website for additional information: see www.allisontransmission.com.

WARNING:

Never shift from neutral (N) to drive (D) or reverse (R) at engine speeds above idle. The vehicle will lurch forward or backward, which could cause property damage and personal injury.

NOTICE:

The engine should never be operated for more than thirty seconds at full throttle with the transmission in gear and the output stalled. Prolonged operation of this type will overheat the transmission fluid and will result in severe damage to the transmission.

NOTICE:

Do not allow the vehicle to coast in neutral. This can result in severe transmission damage. Also, no engine braking is available.

The following tips highlight important operation principles.

- Use reverse (R) to back the vehicle. Completely stop the vehicle before shifting from a forward gear to reverse, or from reverse to forward.
- Select drive (D) for all normal driving conditions. The vehicle will start out in 1st gear (unless the transmission is programmed with 2nd gear start), and as speed increases, the transmission will upshift through each gear automatically. As the vehicle slows down, the transmission will downshift to the correct gear automatically.
- The pressure of your foot on the accelerator pedal influences the automatic shifting. When the pedal is fully depressed, the transmission will automatically upshift at higher engine speeds. A partially-depressed position of the pedal will cause the upshifts to occur at a lower engine speed.
- Occasionally the road, load, or traffic conditions make it desirable to restrict the automatic shifting to a lower range. The lower the gear range, the greater the engine braking power. When in Manual mode, push or pull on the multifunction stalk switch to reach the desired gear. In the lower gear ranges, the transmission will not upshift above the highest gear selected unless the hold override upshift speed is exceeded.
- Use neutral (N) and apply the parking brake when the vehicle is parked with the engine running.

16.05.03 Automatic Mode (A)

Refer to the Allison website for additional information: see www.allisontransmission.com.

In automatic drive mode, upshifts and downshifts are made by the transmission without driver intervention.

Automatic mode is the default start mode. If in manual mode, a short push on the shift control mode switch activates the automatic mode (A). Rotate the D/N/R switch to Drive (D), and press down on the throttle pedal. The transmission will shift automatically.

NOTE: If attempting to select a non-neutral mode without applying the service brakes, the transmission will not shift into gear. To shift into gear, select neutral (N), apply the service brakes, and select the desired mode again.

In drive (D), the start gear is automatically selected. The transmission automatically performs upshifts and downshifts.

16.05.04 Manual Mode (M)

Refer to the Allison website for additional information: see www.allisontransmission.com.

In manual mode, the driver selects the maximum allowed range. This may be helpful when traversing a work site, railroad tracks, or steep grades, for example.

When in automatic mode and with the D/N/R switch set to drive (D), a long push on the shift control mode switch activates the manual mode (M). To increase selected range, pull the lever up (towards you); to decrease the selected range, push the lever down (away from you). The transmission will not upshift above the selected range unless the hold override upshift speed is exceeded.

See Fig. 299,Allison Gear Display in Manual Mode for an example of the driver display with the transmission in manual mode.

1. Current Gear
2. Selected Gear

Fig 301, Allison Gear Display in Manual Mode

NOTE: The transmission may deny a downshift if the engine speed would fall outside of the acceptable range.

NOTE: If attempting to select a non-Neutral mode without applying the service brakes, the transmission will not shift into gear. To shift into gear, select Neutral (N), apply the service brakes, and select the desired mode again.

16.05.05 Low (L)

Refer to the Allison website for additional information: see www.allisontransmission.com.

Use low when wanting to maximize engine braking and minimize the use of the brake pedal—for example, when driving down long grades or when coming to a stop. To select low, push down on the multi-function stalk switch, and hold in the down-shift position for half a second or more. The lowest available start gear will be selected (the starting gear cannot be changed in low).

If low is selected while moving, the transmission will not upshift (unless the system initiates a low override). The system will downshift at the earliest opportunity to provide maximum engine braking.

In the driver display, the low gear is shown as '1.' See Fig. 300,Allison Gear Display in Low Gear.

1. Low (displayed as '1')
2. Highest Gear Available in Low

Fig 302, Allison Gear Display in Low Gear

NOTE: If attempting to select a non-neutral mode without applying the service brakes, the transmission will not shift into gear. To shift into gear, select neutral, apply the service brakes, and select the desired mode again.

16.05.06 Transmission Prognostics

Refer to the Allison website for additional information: see www.allisontransmission.com.

The Allison transmission prognostics display can be found by navigating to the maintenance screens in the driver display. The prognostics screen displays information on the transmission health status (oil filter status, oil level, and oil life). See Fig. 301,Allison Transmission Prognostics. If transmission health falls below acceptable limits, a message will be shown on the driver display.

NOTE: For a valid oil level measurement, the vehicle must be stopped on a level surface with the transmission in neutral (N).

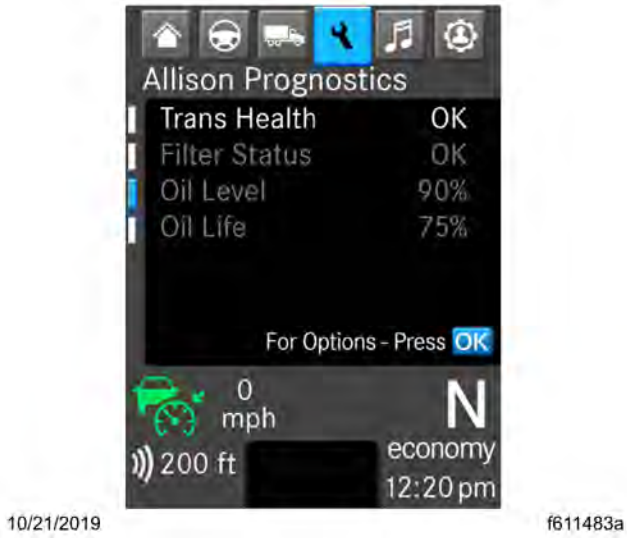

Fig 303, Allison Transmission Prognostics

17.01 Eaton® Fuller® Manual Transmissions 324
17.01.01 General Information 324
17.01.02 Transmission Operation Tips 324
17.02 Clutch 324
17.02.01 General Information 324
17.02.02 Clutch Operation 324
17.02.03 Clutch Adjustment 326

17. Manual Transmissions and Clutch

17.01 Eaton® Fuller® Manual Transmissions

17.01.01 General Information

A vehicle may be equipped with an Eaton 10-, 13-, or 18-speed manual transmission. Vehicles with Eaton manual transmissions have clutch brakes and a hydraulic clutch actuation system.

The transmission shift pattern is printed on a decal attached to the driver-side sun visor or to the dash below the center dash panel. The shift pattern may also be printed on the shift knob.

NOTE: For additional information, go to the Eaton website,**www.roadranger.com**.

17.01.02 Transmission Operation Tips

Follow these important operation principles:

- For all conditions, use the highest gear that is still low enough to start the vehicle moving with the engine at or near idle speed, and without slipping the clutch excessively.
- When operating on-highway with no load or under ideal conditions, use 1st gear to start the vehicle moving forward.
- When operating off-road or under adverse conditions, use low gear to start the vehicle moving forward.
- Use the clutch brake to stop gear rotation when shifting into low or reverse while the vehicle is stationary. The clutch brake is actuated by depressing the clutch pedal all the way to the floor.
- Partially disengage the clutch to break engine torque during normal gear shifts.
- Double-clutch between all upshifts and downshifts that require movement of the shift knob. Splitting of gears does not require movement of the shift knob.
- Never push the range-preselection lever down into low range while operating in high range, except when downshifting from 5th gear to 4th gear.
- Do not shift from high range to low range at high vehicle speeds.
- Never make a range shift or a splitter shift while the vehicle is in reverse.
- Never move the range-preselection lever with the transmission in neutral while the vehicle is moving.
- Skip ratios while shifting *only* when operating conditions permit, depending on the load, grade, and road speed.
- Never coast with the transmission in neutral.

17.02 Clutch

17.02.01 General Information

The hydraulic clutch control system consists of a pedal unit and a secondary cylinder connected by a hydraulic hose. The components of the system have been specially designed to use DOT 4 brake fluid. The hydraulic system is self-adjusting.

Typical operation will not break down the clutch friction surfaces. Heat and wear are almost nonexistent when a clutch is fully engaged. However, during the moment of engagement, when the clutch is picking up the load, considerable heat is generated. If a clutch slips excessively, high temperatures develop quickly between the flywheel, driven discs, and pressure plates. An improperly adjusted or slipping clutch can generate temperatures high enough to cause the friction-facing material to char and burn, destroying the clutch.

To ensure long service life of the clutch, start in the right gear and be alert to clutch malfunctions.

17.02.02 Clutch Operation

Clutch Break-In

With a new or newly installed clutch, the clutch may slip for a short time while the friction surfaces break-in. However, allowing the clutch to slip for more than two seconds can severely damage the clutch disc, pressure plate, and the flywheel.

During initial operation of a new vehicle or a vehicle with a new clutch, check for clutch slippage during acceleration. If the clutch slips, decelerate until the clutch does not slip. Allow the clutch to cool 15 to 30 seconds, and then gradually accelerate again. If the clutch continues to slip, repeat the procedure. If necessary, repeat the procedure up to five times. If the clutch slips after five attempts, stop the vehicle. Allow the clutch to cool for at least one hour. Notify your Freightliner dealer of the problem.

NOTICE:

Do not allow sustained slippage of the clutch; this could severely damage the clutch disc, pressure plate, or flywheel. Damage caused by clutch slippage due to improper break-in is not warrantable.

Using the Clutch Brake

The clutch brake is applied by depressing the clutch pedal past the fully released clutch position, almost to the floor plate. The last part of the clutch pedal travel will compress the clutch brake plates together, stopping the transmission input shaft. The purpose of the clutch brake is to stop the transmission gears from rotating in order to quickly engage a transmission gear after idling in neutral.

NOTICE:

Never apply the clutch brake when the vehicle is moving. If the clutch brake is applied when the vehicle is moving, the clutch brake will try to stop or decelerate the vehicle, causing rapid wear of the clutch brake friction discs. Considerable heat will be generated, causing damage to the release bearings and the transmission front bearings.

Using the Clutch

Use the clutch pedal only when starting the engine, launching the vehicle from a stop, or shifting. To launch a stationary vehicle, depress the clutch pedal all the way to the floor plate (see Clutch Brake above) and shift from neutral to a low gear. Slowly raise your foot until the clutch starts to engage. In this position the clutch is starting to connect the transmission input shaft to the flywheel and is causing the most heat and wear. Slightly increase the engine speed and smoothly allow the clutch pedal to return to the rest position. Do not allow the clutch to remain in the partially-engaged position any longer than necessary to obtain a smooth start.

Double-clutch to shift gears while the vehicle is moving. Depress the clutch pedal most of the way in, but not all the way to the floor plate. Depressing the clutch pedal to the floor plate will engage the clutch brake. Shift the transmission into neutral and fully release the clutch pedal. When upshifting, wait for the engine speed to decrease to the road speed. When downshifting, increase the engine speed to match the road speed. Fully release the clutch pedal after completing the shift.

NOTICE:

Riding the clutch while driving is damaging to the clutch because partial clutch engagement causes slippage and heat. Resting your foot on the clutch pedal will also put a constant thrust load on the release bearing, thinning the bearing lubricant and increasing the wear on the

Holding the Vehicle on an Incline

Always use the vehicle service brakes to prevent the vehicle from rolling backwards while stopped on a hill. Slipping the clutch on a hill to maintain the vehicle position will quickly damage the clutch assembly.

Coasting

Coasting with the clutch pedal depressed and the transmission in a low gear can cause high driven disc speed. The clutch speed can be much higher under these conditions than when the engine is driving the clutch. This condition creates a hazardous situation due to the lack of vehicle control and due to the high clutch disc speed. Engaging the clutch under these conditions can cause component damage because of the shock loads to the clutch and drivetrain.

WARNING:

Always shift into the gear that is correct for the traveling speed of the vehicle and engage the clutch. Coasting with the clutch disengaged can prevent engagement of the correct transmission gear which can cause loss of vehicle control, possibly resulting in personal injury or property damage.

High clutch disc speeds while coasting can also cause the clutch facing to be thrown off the disc. Flying debris from the clutch can cause injury to persons in the cab.

17.02.03 Clutch Adjustment

Eaton Fuller Solo clutches are adjustment-free. As the clutch wears, its wear-adjusting technology monitors clutch components and makes any necessary adjustments. The wear adjusting technology comes from two sliding cams, which rotate to maintain the proper adjustment. Atop the upper cam, a wear indicating tab mirrors the cam’s movement, letting you know when it’s time to replace the clutch.

18.01 Interaxle Lock, Tandem Axles 328
18.01.01 Interaxle Lock, Tandem Axles 328
18.01.02 Interaxle Lock Switch 328
18.01.03 Interaxle Lock Operation 329
18.02 Driver-Controlled Differential Lock (DCDL) 330
18.02.01 General Information 330
18.02.02 Differential Lock Switch 330
18.02.03 Operation of the Driver-Controlled Differential Lock (DCDL) 331
18.02.04 Single Drive Axles with Traction Equalizer 332
18.03 Lift Axles 332

18. Drive Axles

18.01 Interaxle Lock, Tandem Axles

18.01.01 Interaxle Lock, Tandem Axles

The interaxle lock (axle lock, interaxle differential lockout) feature causes the drive axle shafts to rotate together, and is recommended for use under adverse road conditions where greater traction is needed.

When engaged, the interaxle lock essentially makes the driveshaft a solid connection between the drive axles. Power entering the forward axle is transmitted straight through to the rearmost axle(s). Driveline torque is now delivered equally and the drive axles, and wheels, turn together at the same speed. The interaxle lock increases drivetrain and tire wear and should be used only when improved traction is required.

A status screen showing engaged locks is found in the vehicle operations menus on the driver display. See Fig. 302, **Interaxle and Differential Locks Status Screen**.

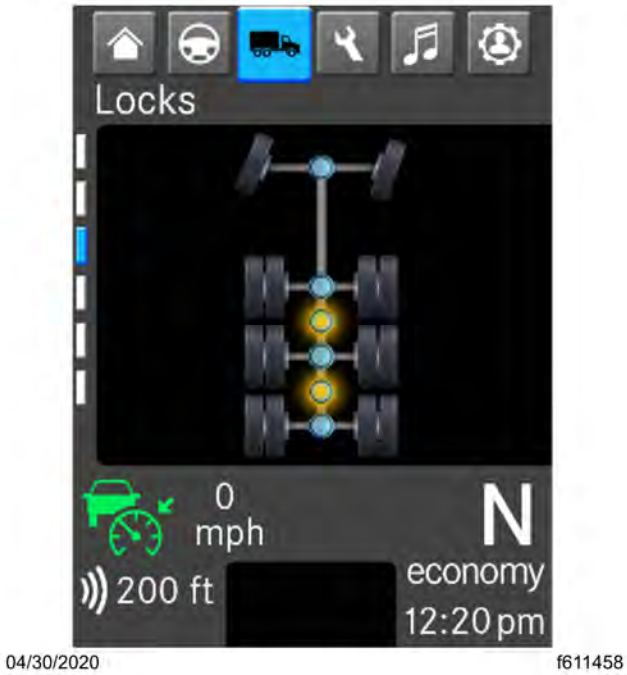

Fig 304, Interaxle and Differential Locks Status Screen

18.01.02 Interaxle Lock Switch

An interaxle lock switch allows the driver to lock the drive axles together, shown in Fig. 303, **Interaxle Lock Switches**. Toggle the interaxle switch up to engage the lock. If the vehicle is equipped with Detroit axles, the switch illumination indicates the lock is engaged.

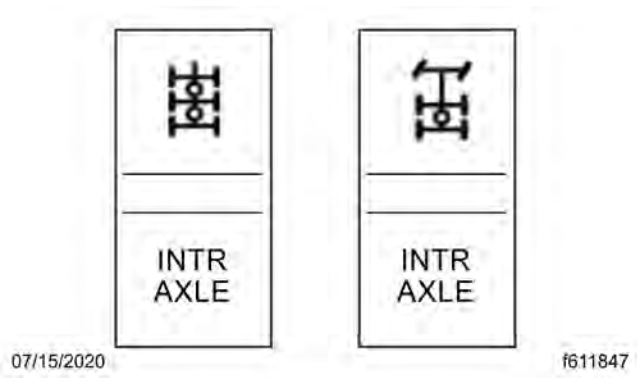

Fig 305, Interaxle Lock Switches

18.01.03 Interaxle Lock Operation

NOTICE:

Engage the interaxle lock only when the vehicle is moving at less than 30 mph (48 km/h). Engaging the interaxle lock at speeds above 30 mph (48 km/h) can cause axle damage.

An interaxle lock should not be engaged on a vehicle with obviously spinning wheels. Engagement at high speed or power can damage the axle(s).

IMPORTANT: If equipped with the optional automatic disengagment feature, the interaxle lock will not engage above 30 mph speed (48 km/h) and will automatically disengage at 50 mph (79 km/h). The parameters of this feature are not modifiable.

NOTE: If the interaxle lock is engaged when the engine is turned off, the interaxle lock will disengage.

1. With the engine running, toggle up on the interaxle lock switch to engage the interaxle lock. Do not wait until traction is lost and the tires are spinning before engaging the interaxle lock.
2. If the vehicle is moving, briefly let up on the accelerator until the interaxle lock engages. The indicator light on the interaxle lock switch will illuminate red when the lock is engaged. Depending on the vehicle configuration, a buzzer may also sound.

NOTICE:

Do not operate the vehicle continuously with the interaxle locked during extended good road conditions. To do so could result in damage to the axle gearing and excessive driveline and tire wear.

NOTE: Both the switch light and inter-axle indicators on the screen will flash if there is a delay in engaging or disengaging the locks.

3. Proceed over poor road conditions with caution.
4. Toggle down on the interaxle lock switch to disengage the interaxle lock after leaving poor road conditions.

5. If the vehicle is moving, briefly let up on the accelerator to allow the interaxle lock to disengage, then resume driving at normal speed. Once the interaxle lock disengages, the indicator light in both the switch and on the ICU display screen will turn off.

18.02 Driver-Controlled Differential Lock (DCDL)

18.02.01 General Information

The driver-controlled differential lock (DCDL) feature (side-to-side wheel lock, traction control, or traction equalizer) is available on vehicles with single or tandem-drive axles.

The DCDL provides maximum traction for slippery conditions by forcing the wheels on each drive axle governed by the switch to rotate together. When the DCDL is engaged, the clutch collar completely locks the differential case, gearing, and axle shafts together, maximizing the traction of both wheels. Use the DCDL if the interaxle lock does not provide sufficient traction.

A status screen showing engaged locks is found in the vehicle operations menus on the driver display. See Fig. 304, **Interaxle and Differential Locks Status Screen**.

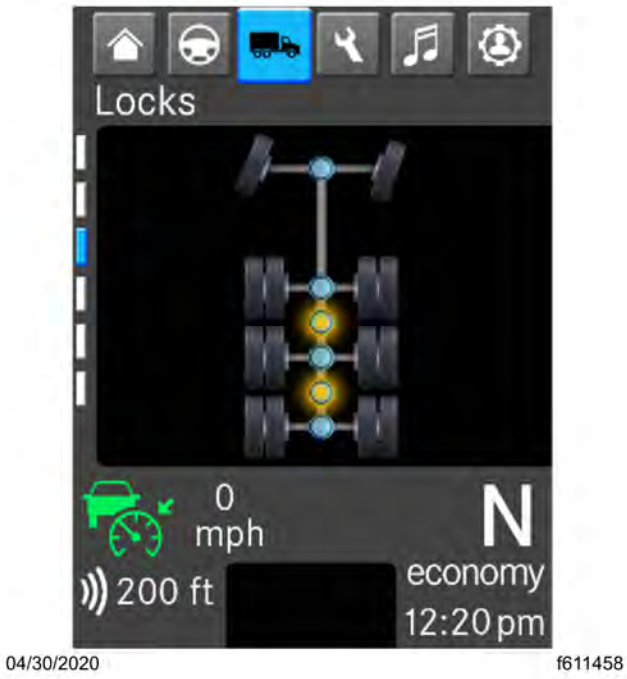

Fig 306, Interaxle and Differential Locks Status Screen

18.02.02 Differential Lock Switch

Each differential lock is controlled by a switch on the dash. See Fig.305, **Example Differential Lock Switches** for examples of different switches.

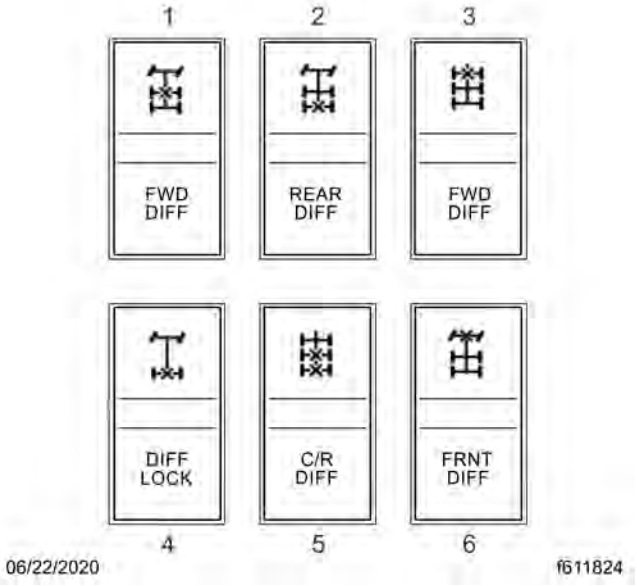

1. Forward Drive Axle Differential Lock Switch
2. Rear Drive Axle Differential Lock Switch
3. Forward Drive Axle Differential Lock Switch
4. Differential Lock Switch, 4X2
5. Center and Rear Differential Lock Switch
6. Front Differential Lock Switch

Fig 307, Example Differential Lock Switches

18.02.03 Operation of the Driver-Controlled Differential Lock (DCDL)

NOTICE:
Engage the driver-controlled differential lock (DCDL) only when the vehicle is stopped or moving at less than 5 mph (8 km/h). Engaging the DCDL at speeds above 5 mph (8 km/h) can cause internal axle damage.

IMPORTANT: If equipped with the optional automatic disengagement feature, the DCDL will not engage at speeds above 5 mph (8 km/h) and will automatically disengage at 25 mph (40 km/h). The parameters of this feature are not modifiable.

NOTE: On some vehicles, the differential lock system is connected through the low speed range of the transmission. If this system is used, the transmission must be in the low speed range for the wheels to fully lock. In addition, shifting out of low speed range will also disengage the differential lock.

NOTE: If the DCDL is engaged when the engine is shut down, the DCDL will disengage.

1. With the engine running, toggle up on the differential lock switch to engage the driver-controlled differential lock.
2. If the vehicle is moving, briefly let up on the accelerator to relieve torque on the gearing, allowing the differential to fully lock. The differential lock switch will illuminate red when the lock is engaged. Depending on the vehicle configuration, a buzzer may also sound.

WARNING:
Be especially careful when driving under slippery conditions with the differential locked. Though forward traction is improved, the vehicle can still slip sideways, causing possible loss of vehicle control, personal injury, and property damage.

3. Drive cautiously and do not exceed 25 mph (40 km/h). When the differential is fully locked, the turning radius will increase because the vehicle understeers. See Fig.306,Turning Radii.

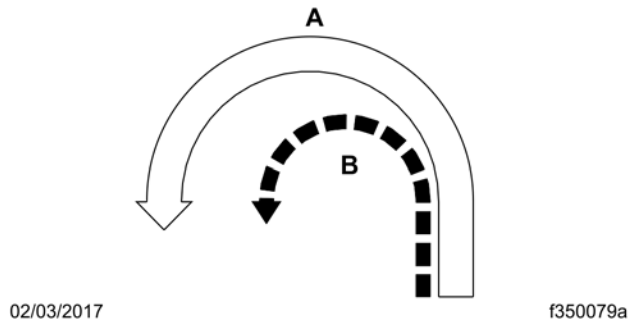

A. Turning Radius When the DCDL is Engaged (understeer condition)
B. Turning Radius When the DCDL is Disengaged

Fig 308, Turning Radii

4. Toggle down on the differential lock switch to disengage the DCDL after leaving poor road conditions.
5. If the vehicle is moving, briefly let up on the accelerator to allow the wheels to fully unlock, then resume driving at normal speed.

18.02.04 Single Drive Axles with Traction Equalizer

Some single drive axles are equipped with a traction equalizer that is a load-sensing, self-actuating feature. A traction equalizer provides normal differential action where traction is good. When one wheel begins to spin faster than the other, clutch plates in the differential housing automatically engage, delivering power to both wheels. There is no operator control with this feature.

NOTICE:
Tire sizes on both rear wheels should be the same on axles equipped with a traction equalizer. If not, excessive wear may occur in the traction equalizer.

18.03 Lift Axles

Lift axles are axles that can be lifted off the ground to reduce tire wear, rolling resistance, and toll charges when not required to distribute chassis load to meet the gross axle weight rating (GAWR) and bridge law requirements.

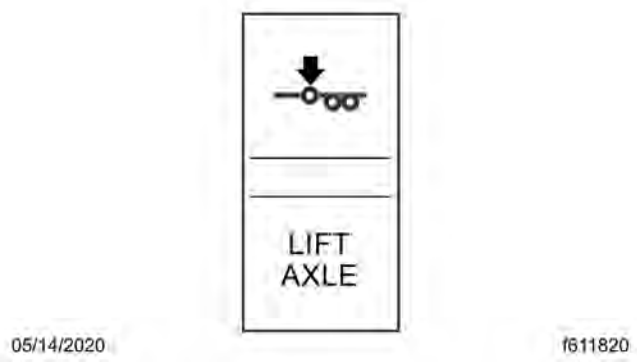

Fig 309, Lift Axle Dash Switch

A manually controlled lift axle can be lowered by toggling up on the LIFT AXLE switch. See Fig. 307,Lift Axle Dash Switch. The axle can be raised by toggling down on the LIFT AXLE switch. The switch will illuminate green when the axle is in the lowered position.

There are three types of axles that are manually lowered and raised using the LIFT AXLE switch:

- Steerable lift axle: will raise when the vehicle is put in reverse.
- Non-steerable lift axle: will maintain position when the vehicle is put in reverse.
- Lock-straight lift axle: will raise when the vehicle is put in reverse; the wheels lock in place when the lift axle is up.

There are also auto-deploying lift axles which automatically raise and lower given specific conditions:

- Reverse Autolift: the retractable axle might rise or stay in the fully-up position when the transmission is shifted into reverse.
- OptiMAAX: the retractable axle might move to or stay in the fully-down position on a loaded vehicle following a system malfunction, loss of power, or a perceived tampering attempt. The retractable axle will also lower to the fully-down position when payload reaches a certain weight.

19.01 Fifth Wheel Lubrication 336
19.02 Fifth Wheel Coupling 337
19.02.01 General Information 337
19.02.02 Trailer Auxiliary Switch 337
19.02.03 Fontaine Fifth Wheel Coupling 337
19.02.04 Holland Fifth Wheels Coupling 341
19.02.05 Jost Fifth Wheel Coupling 347
19.03 Fifth Wheel Uncoupling 351
19.03.01 Manual Uncoupling 351
19.03.02 Air-Actuated Uncoupling 354
19.03.03 Preparing the Trailer for Uncoupling 355
19.03.04 Air-Activated Kingpin Unlock 355
19.04 Fifth Wheel Slide 357
19.04.01 Fifth Wheel Slide 357
19.04.02 Air Slide Operation 358

19. Fifth Wheels

19.01 Fifth Wheel Lubrication

WARNING:
A standard fifth wheel plate must be kept lubricated to prevent binding between the tractor and trailer. A binding fifth wheel could cause erratic steering and loss of vehicle control, possibly resulting in personal injury or death.

The standard fifth wheel plate must be kept well lubricated with chassis grease to prevent friction and binding between the tractor fifth wheel plate and the trailer.

For lubrication instructions, see **Group 31** of the *49X Maintenance Manual* .

For a low-lube fifth wheel plate, inspect the condition of the low-lube pads. There should be no damaged or missing pieces. Slight puckering at the outside edges is normal.

For no-lube fifth wheel plates, inspect the condition of the no-lube pads. If any of the following conditions are present, replace the lube plates.

- Plates severely chipped, cracked, gouged, or bent.
- More than 20% of the lube plate coating missing from one or both plates due to normal wear.
- A straight edge laid across the lube plate contacts parts of the surrounding fifth wheel as shown in Fig. 308,No-Lube Plate Wear Inspection.

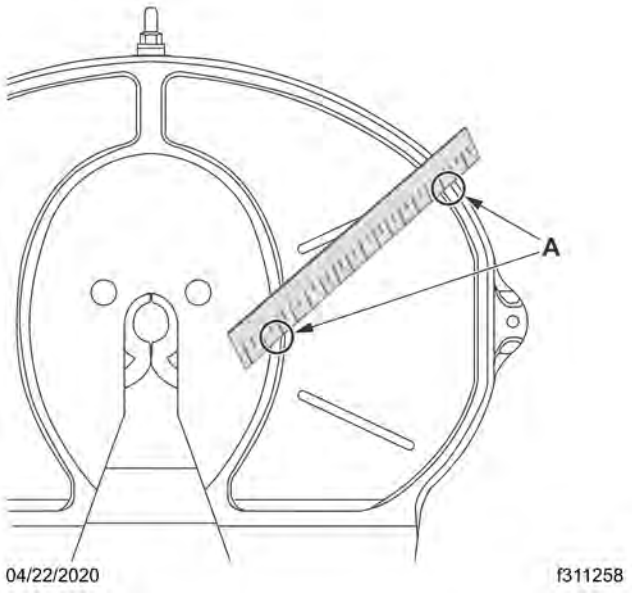

Fig 310, No-Lube Plate Wear Inspection

19.02 Fifth Wheel Coupling

19.02.01 General Information

WARNING:

Do not use any fifth wheel that fails to operate properly. Doing so may cause loss of vehicle control, possibly resulting in severe personal injury or death.

Fifth wheel coupling is activated with the lock control handle located on either the right or left side of the fifth wheel. Coupling has successfully occurred when the kingpin is in the fifth wheel jaws and the control handle has moved to the locked position.

Due to the number of options available, your vehicle may be equipped with a fifth wheel not described in this manual. In this situation, please reference the vendor literature on the fifth wheel installed.

19.02.02 Trailer Auxiliary Switch

The trailer auxiliary switch energizes an optional circuit that allows the trailer electrical system to draw power.

Press the top of the switch to activate the trailer auxiliary function. Press the bottom of the switch to turn trailer auxiliary function off. See Fig.309,Trailer Auxiliary Switch.

Fig 311, Trailer Auxiliary Switch

19.02.03 Fontaine Fifth Wheel Coupling

1. Chock the front and rear of the trailer tires to prevent the trailer from moving.
2. If equipped with a standard fifth wheel, check the surface of the fifth wheel for a liberal coating of grease.
3. Ensure the fifth wheel jaws are fully open and the lock control handle is fully extended as shown in Fig. 310,Fontaine Fifth Wheel Lock Handle Positions.

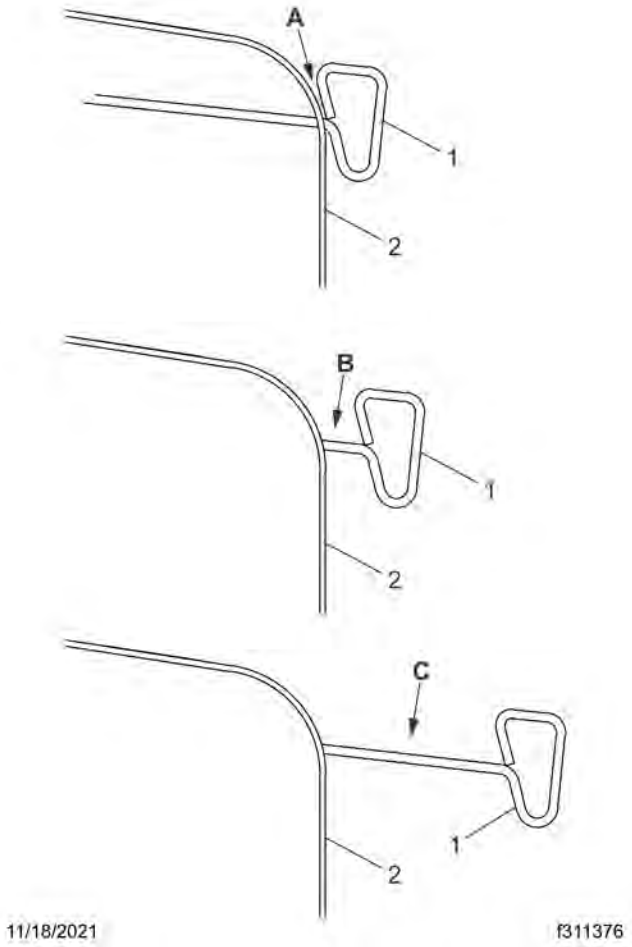

A. The base of the pull handle within 1 inch of the fifth wheel indicates the fifth wheel jaws are locked.
B. A gap of more than 1 inch between the pull handle and fifth wheel indicates the fifth wheel jaws are partially open.
C. A fully extended pull handle indicates the fifth wheel jaws are open.
1. Pull Handle
2. Fifth Wheel

Fig 312, Fontaine Fifth Wheel Lock Handle Positions

4. If the vehicle is equipped with a standard fifth wheel, inspect the trailer kingpin plate to verify it is large enough to completely cover the fifth wheel and that it is properly greased.
5. Make sure the fifth wheel top plate is tilted down and the ramps are as low as possible.
6. Position the tractor so the kingpin is in a position to enter the throat of the fifth wheel.

WARNING:

When coupling, always inflate the tractor suspension air bags prior to coupling.

Inflating the tractor suspension air bags while positioned underneath the trailer may result in damage to and incorrect coupling of the fifth wheel, possibly resulting in serious personal injury or death.

NOTICE:

Attempting to couple at the wrong height may cause improper coupling, which could result in damage to the fifth wheel or kingpin.

7. Adjust the trailer height if required.

   For a **standard fifth wheel plate** , the trailer should contact the fifth wheel at the top of the approach ramps as shown in Fig.311,Trailer Connection Point, Standard Fifth Wheel.

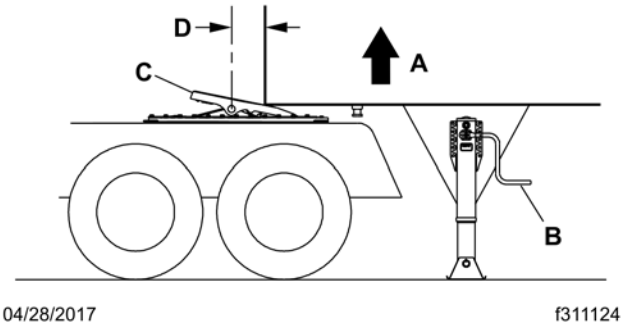

A. The fifth wheel must lift the trailer.
B. Adjust the trailer height if necessary.
C. Tilt the ramps down.
D. The trailer should contact the fifth wheel 4-6 inches behind the pivot point.

Fig 313, Trailer Connection Point, Standard Fifth Wheel

8. With the fifth wheel opening aligned with the trailer kingpin, back the tractor slowly toward the trailer. To prevent the trailer from slamming into the kingpin, **stop** after sliding under the trailer. Then resume backing up slowly until the fifth wheel locks.
9. Apply the tractor parking brakes.

10. Perform a coupling inspection.

    10.a Verify that there is no gap between the bottom of the trailer and the fifth wheel as shown in Fig. 312,Coupling Inspection View.

    10.b Make sure the jaw and wedge of the fifth wheel are locked in place behind the kingpin as shown in Fig. 312,Coupling Inspection View.

    10.c Check that the lock control handle is fully retracted as shown in Fig. 310,Fontaine Fifth Wheel Lock Handle Positions; the gap between the back of the pull handle and the skirt of the fifth wheel should be *less than* one inch as shown in Fig.313,Fontaine Fifth Wheel Handle Retracted.

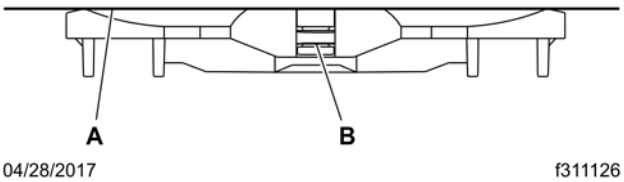

A. Check that there is no gap between the trailer and fifth wheel.

B. Verify the kingpin is locked in the fifth wheel jaws.

Fig 314, Coupling Inspection View

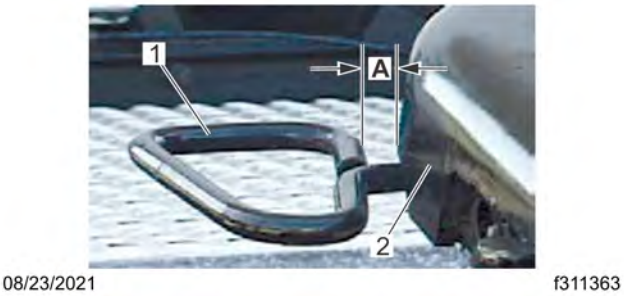

A. Make sure there is less than a one inch gap between the back of the pull hand and the fifth wheel skirt.

1. Pull Handle
2. Skirt of Fifth Wheel

Fig 315, Fontaine Fifth Wheel Handle Retracted

WARNING:

Incorrect fifth wheel locking could cause the trailer to disconnect, possibly resulting in serious personal injury or death.

11. Release the tractor parking brakes.

    Test for kingpin lockup by slowly inching the tractor forward, pulling on the trailer against the chocks.

12. After lockup is completed and verified, connect the tractor-to-trailer air system lines and the electrical cable to the trailer. Take care to prevent dirt or foreign material from entering the air system lines.

NOTICE:

Always make sure the connection hanger keeps the trailer air hoses and electrical cables positioned so that they do not rub on anything. Rubbing may wear through hoses or cables, resulting in air leaks, or exposed or broken wires, potentially affecting trailer brake or electrical systems.

13. Charge the air brake system with air, checking that the air connections do not leak.
14. Fully retract the landing gear legs and secure the crank handle.
15. Remove the chocks.

19.02.04 Holland Fifth Wheels Coupling

1. Chock the front and rear of the trailer tires to prevent the trailer from moving.
2. If equipped with a **standard fifth wheel** , check the surface of the fifth wheel for a liberal coating of grease.

   If equipped with a **no- or low-lube fifth wheel plate** ensure there are no sharp edges, nuts, bolts, gouges, or large holes along the leading edge of the trailer or in the path of the fifth wheel as shown in Fig.314,Path of a Fifth Wheel, and that any upper coupler residual grease is free of coarse grit.

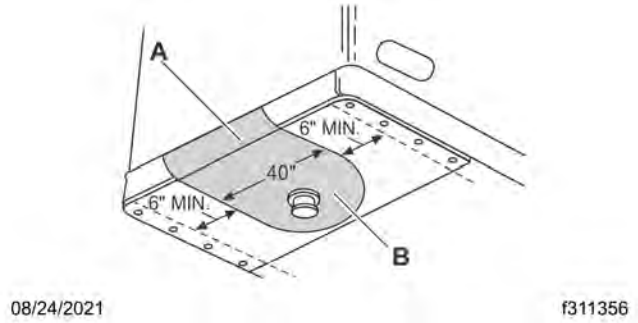

A. Keep the direct path of the fifth wheel and six inches to either side free of large holes and gouges.

B. Keep bolts and nuts clear of the bolster plate.

Fig 316, Path of a Fifth Wheel

3. Ensure the fifth wheel jaw is fully open and the release handle is in the unlocked position.

   3.a To unlock a **Holland FW35/33/31** fifth wheel, pull out the release handle as shown in Fig. 315,FW35 Holland Lock Open and Closed.

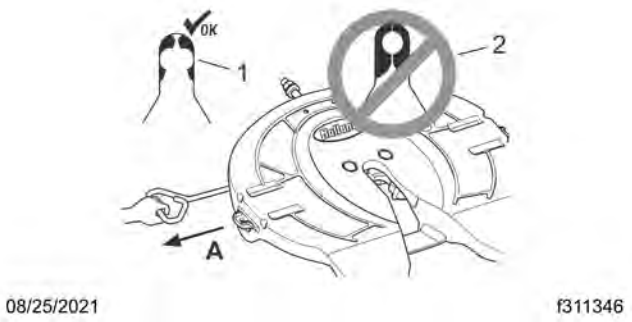

A. Pull the release handle to open the lock.
1. Lock Open
2. Lock Closed

Fig 317, FW35 Holland Lock Open and Closed

3.b To unlock a **Holland FW17 or FWAL:**

- Slide the release handle forward to move the front notch on the locking plate clear of the bracket.
- Pull the release handle completely out.
- Slide the release handle forward again to hook the rear notch on the locking plate onto the bracket as shown in Fig.316,Unlocking a Holland FW17 or FWAL.

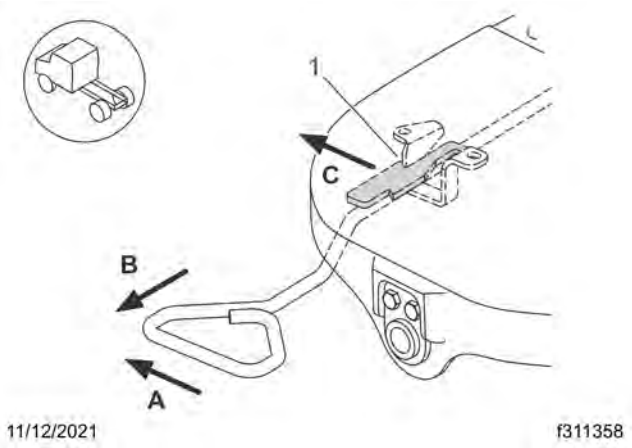

1. Locking Plate Rear Notch

Fig 318, Unlocking a Holland FW17 or FWAL

4. Make sure the fifth wheel top plate is tilted rearwards with the ramps down and resting on the tilt stops.
5. Position the tractor so that the center of the fifth wheel is in line with the trailer kingpin as shown in Fig. 317,Positioning the Tractor. The kingpin should be in a position to enter the throat of the locking mechanism.

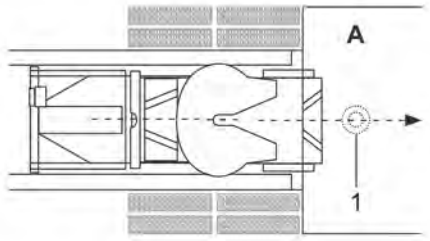

08/24/2021 f311347

A. Line up the fifth wheel throat with the trailer kingpin.
1. Kingpin

Fig 319, Positioning the Tractor

NOTICE:
Attempting to couple at the wrong height may cause improper coupling, which could result in damage to the fifth wheel or kingpin.

6. Adjust the trailer height if required.

   For a **standard fifth wheel plate** , the trailer should contact the fifth wheel approximately 4 to 8 inches (10 to 20 cm) behind the fifth wheel pivot as shown in Fig.324,Trailer Connection Point, Standard Fifth Wheel.

   For a **no- or low-lube fifth wheel plate** , the fifth wheel must slide freely under the trailer; the trailer should contact the fifth wheel at the pivot point shown in Fig.318,Trailer Connection Point, No- and Low-Lube Fifth Wheel.

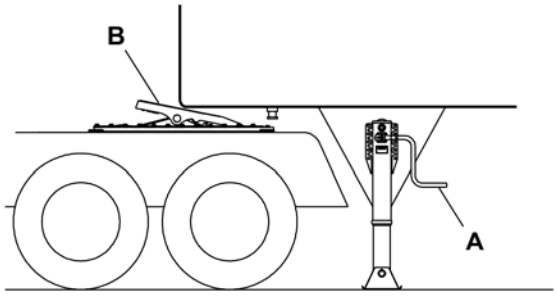

04/28/2017 f311125

A. Adjust the trailer height as needed.
B. Verify that the pivot point allows the fifth wheel to slide under the trailer.

Fig 320, Trailer Connection Point, No- and Low-Lube Fifth Wheel

7. With the fifth wheel lock opening aligned with the trailer kingpin, back the tractor slowly toward the trailer. After sliding under the trailer, **stop** to prevent from hitting the kingpin, then resume backing up slowly until the fifth wheel locks.

   On a **standard fifth wheel** , the fifth wheel must lift the trailer.

   On a **no- or low-lube fifth wheel** , do **not** lift the trailer. Lifting the trailer with a no- or low-lube fifth wheel may damage the fifth wheel plate.

8. Apply the tractor parking brakes.

WARNING:
A visual inspection is required by law.
Some improper couplings can pass a pull test. Sound is not reliable.
Get out of the cab and look.
Incorrect coupling could cause the trailer to disconnect, possibly resulting in serious personal injury or death.

9. Perform a coupling inspection.
   9.a Verifying a **Holland FW35/33/31** fifth wheel is locked:

- Verify that there is no gap between the bottom of the trailer and the fifth wheel as shown in Fig. 319,No Gap Between Fifth Wheel and Trailer.

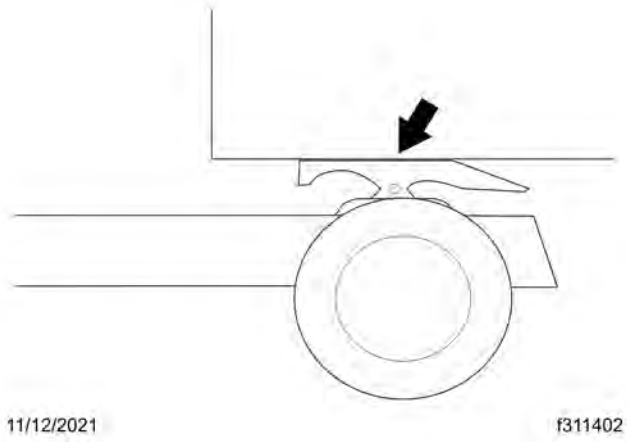

Fig 321, No Gap Between Fifth Wheel and Trailer

- Verify that the kingpin is securely locked as shown in Fig. 320, **Kingpin Locked in Holland FW35/33/31 Fifth Wheel Jaws**.

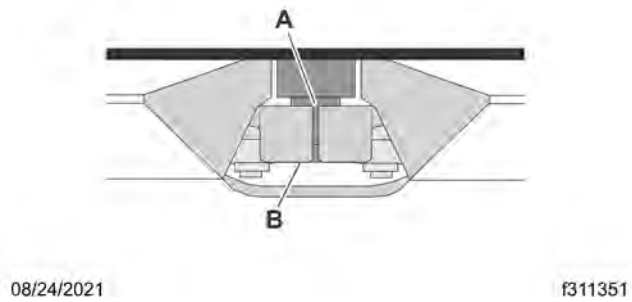

A. Verify there is a 1/4 inch (6.35 mm) or less gap.

B. Verify that the locks are completely closed around the kingpin.

Fig 322, Kingpin Locked in Holland FW35/33/31 Fifth Wheel Jaws

- Verify that the nut and washer are snug against the fifth wheel as shown in Fig. 321,Nut and Washer Snug Against Locked Holland FW35/33/31.

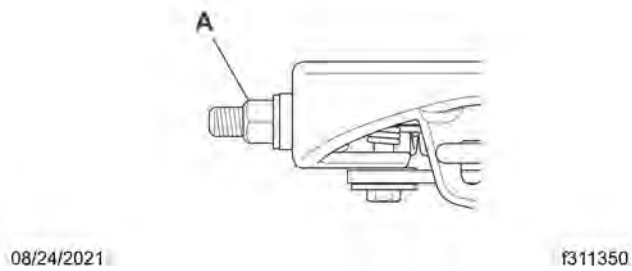

A. Verify the nut and washer are snug against the fifth wheel

Fig 323, Nut and Washer Snug Against Locked Holland FW35/33/31

9.a Verifying a **Holland FW17 or FWAL** is locked:

- Verify that there is no gap between the bottom of the trailer and the fifth wheel as shown in Fig. 319,No Gap Between Fifth Wheel and Trailer
- Verify that the kingpin is securely locked as shown in Fig. 322,Holland FW17 or FWAL Lock Closed Around Kingpin.

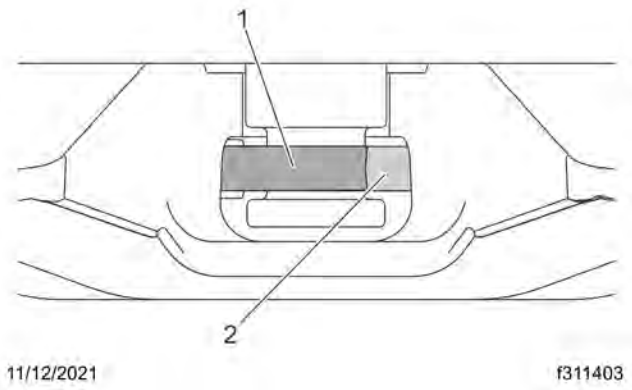

1. Lock Completely Closed Around Kingpin
2. Lock Retainer Securing Lock

Fig 324, Holland FW17 or FWAL Lock Closed Around Kingpin

- Verify that the handle is fully retracted as shown in Fig.323,Holland FW17 or FWAL Handle Fully Retracted.

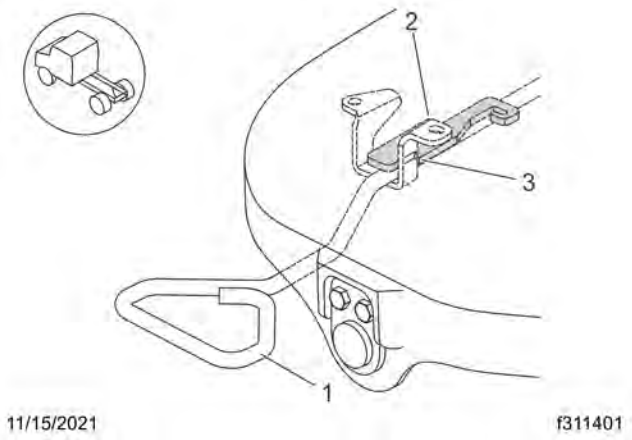

1. Handle
2. Locking Plate Rear Notch (behind top of bracket)
3. Locking Plate Front Notch (behind arm of bracket)

Fig 325, Holland FW17 or FWAL Handle Fully Retracted

10. Release the tractor parking brakes.

    Test for kingpin lockup by slowly inching the tractor forward, pulling on the trailer against the chocks.

11. After lockup is completed, connect the tractor-to-trailer air system lines and the electrical cable to the trailer. Take care to prevent dirt or foreign material from entering the air system lines.

NOTICE:

Always make sure the connection hanger keeps the trailer air hoses and electrical cables positioned so that they do not rub on anything. Rubbing may wear through hoses or cables, resulting in air leaks, or exposed or broken wires, potentially affecting trailer brake or electrical systems.

12. Charge the air brake system with air, checking that the air connections do not leak.

WARNING:

Incorrect fifth wheel lock adjustment could cause the trailer to disconnect, possibly resulting in serious personal injury or death.

13. With the trailer wheels chocked and the brakes set, check for clearance between the kingpin and the fifth wheel jaws by moving the tractor forward and backward against the locked kingpin. If slack is present, uncouple the trailer and have the fifth wheel inspected and adjusted by a certified technician.

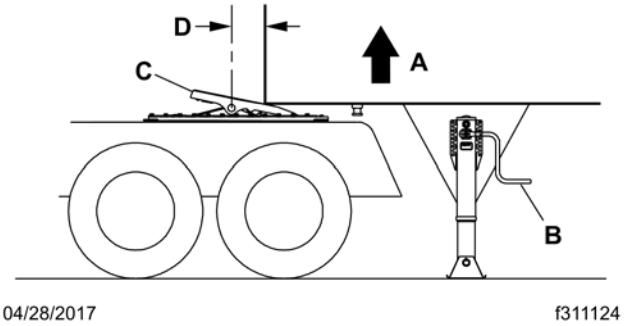

A. The fifth wheel must lift the trailer.
B. Adjust the trailer height if necessary.
C. Tilt the ramps down.
D. The trailer should contact the fifth wheel 4-6 inches behind the pivot point.

Fig 326, Trailer Connection Point, Standard Fifth Wheel

19.02.05 Jost Fifth Wheel Coupling

1. Chock the front and rear of the trailer tires to prevent the trailer from moving.
2. Tilt the fifth wheel ramps down.
3. Unlock the fifth wheel jaws.

   Lift the release handle up into the wide slot and then pull the release handle out while moving it forward as shown in Fig.325,Unlocking the Jost Fifth Wheel. Lock the handle into the open position on the notch provided.

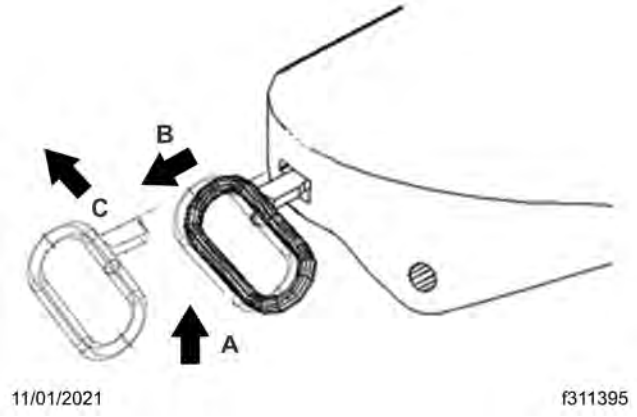

A. Lift the release handle up into the wide slot.
B. Pull the handle out.
C. While pulling the handle out, move it forward.

Fig 327, Unlocking the Jost Fifth Wheel

4. Back the vehicle close to the trailer, centering the kingpin on the fifth wheel throat as shown in Fig. 329,Positioning the Tractor.

NOTICE:
Attempting to couple at the wrong height may cause improper coupling, which could result in damage to the fifth wheel or kingpin.

5. Adjust the trailer height (if required).

   For a **standard fifth wheel plate** , the trailer should contact the fifth wheel approximately 4 to 6 inches (10 to 20 cm) behind the pivot point as shown in Fig.328,Trailer Connection Point, Standard Fifth Wheel.

   For a **no- or low-lube fifth wheel plate** , the trailer should contact the fifth wheel at the pivot point as shown in Fig. 330,Trailer Connection Point, No- and Low-Lube Fifth Wheel, allowing the fifth wheel to slide freely under the trailer.

6. Back the tractor slowly toward the trailer.

   On a **standard fifth wheel** , the fifth wheel must lift the trailer.

   On a **no- or low-lube fifth wheel** , do **not** lift the trailer. Lifting the trailer with a no- or low-lube fifth wheel may damage the fifth wheel plate.

   After lifting or sliding under the trailer, **stop** . This is to prevent hitting the kingpin too hard. Then resume backing up slowly until the fifth wheel locks.

7. Apply the tractor parking brake, then perform a physical check for positive kingpin lockup.

   Depending on the fifth wheel model, the handle should be fully retracted with the handle inside the narrow slot as shown in Fig.326,Locked Jost Fifth Wheel. or the release handle should abut the casting as shown in Fig. 327,Jost Release Handle Locked.

   There should be no gap between the trailer and the fifth wheel.

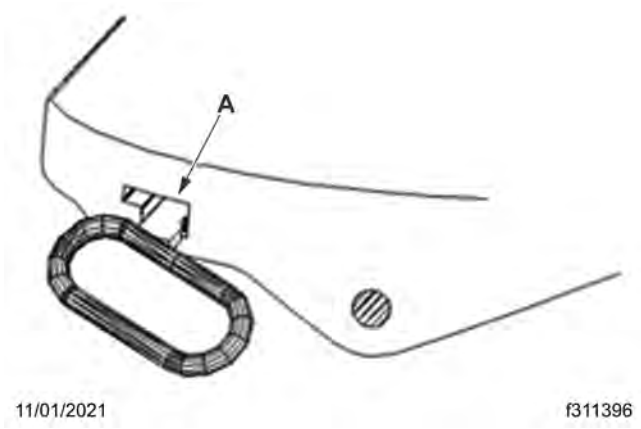

A. Verify the handle is inside the narrow slot.

Fig 328, Locked Jost Fifth Wheel

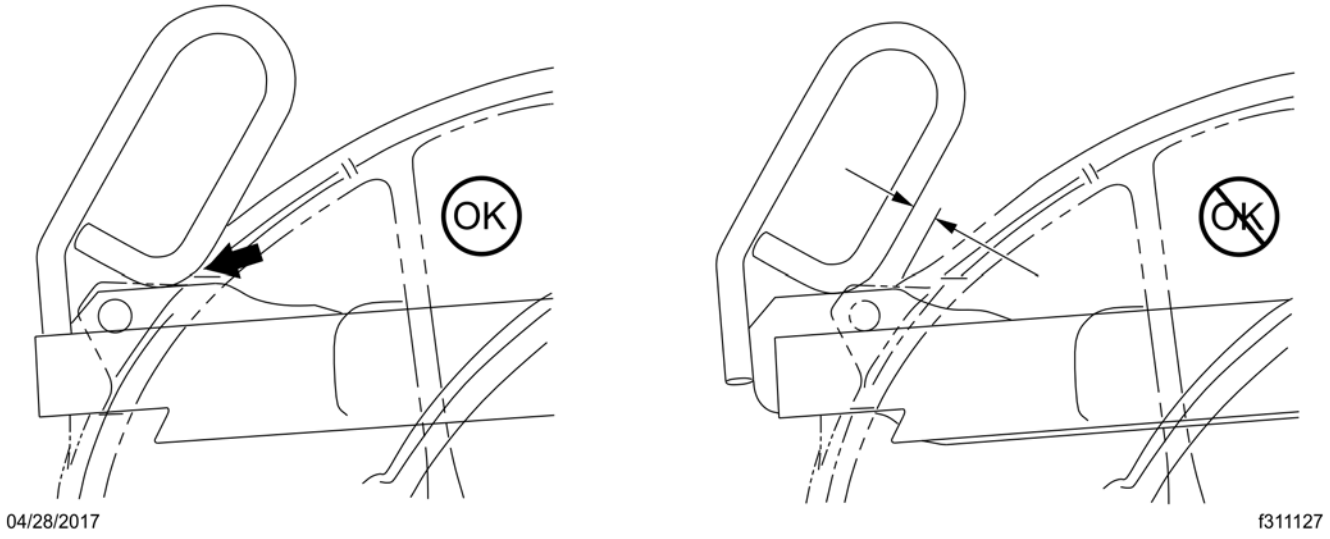

Fig 329, Jost Release Handle Locked

8. Release the tractor parking brakes and test for kingpin lockup by slowly moving the tractor forward, pulling the trailer against the chocks.
9. After lockup is verified, connect the tractor-to-trailer air system lines and the electrical cable to the trailer. Take care to prevent dirt or foreign material from entering the air system lines.

NOTICE:
Always make sure the connection hanger keeps the trailer air hoses and electrical cables positioned so that they do not rub on anything. Rubbing may wear through hoses or cables, resulting in air leaks, or exposed or broken wires, potentially affecting trailer brake or electrical systems.

10. Charge the air brake system with air, checking that the air connections do not leak.
11. Fully retract the landing gear legs and secure the crank handle.
12. Remove the chocks.

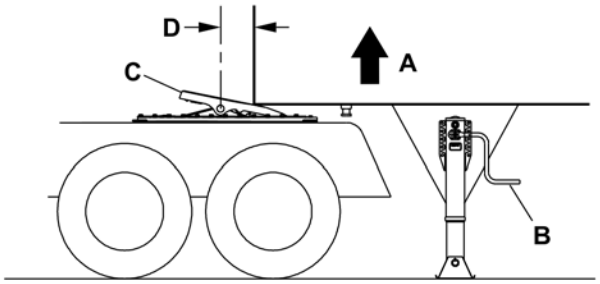

04/28/2017 f311124

A. The fifth wheel must lift the trailer.
B. Adjust the trailer height if necessary.
C. Tilt the ramps down.
D. The trailer should contact the fifth wheel 4-6 inches behind the pivot point.

Fig 330, Trailer Connection Point, Standard Fifth Wheel

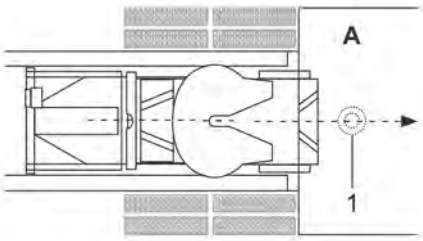

08/24/2021 f311347

A. Line up the fifth wheel throat with the trailer kingpin.
1. Kingpin

Fig 331, Positioning the Tractor

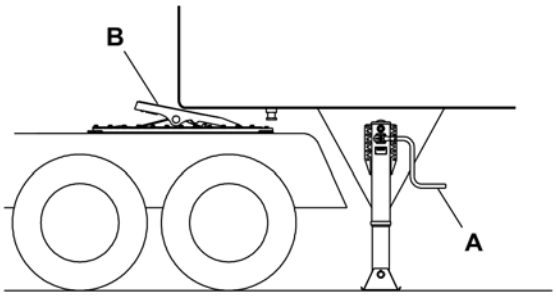

A. Adjust the trailer height as needed.

B. Verify that the pivot point allows the fifth wheel to slide under the trailer.

Fig 332, Trailer Connection Point, No- and Low-Lube Fifth Wheel

19.03 Fifth Wheel Uncoupling

19.03.01 Manual Uncoupling

1. Slowly back the tractor tightly against the trailer to relieve pressure on the fifth wheel lock.
2. Apply the tractor and trailer parking brakes.
3. Chock the trailer rear wheels.
4. Lower the trailer landing gear until the weight is removed from the fifth wheel.
5. Disconnect the tractor-to-trailer air system lines and electrical cable. Plug the air lines to prevent dirt or foreign material from entering the lines.
6. Verify that both the yellow parking-brake and red trailer-air-supply knobs are out, the tractor and trailer parking brakes are set, and that the trailer is prepared for uncoupling.
7. Release the kingpin locking mechanism following the instructions for each manufacturer below.

   7.a **Fontaine:** Lift the safety latch and pull the lock control handle to the unlocked position as shown in Fig. 332,Fontaine Fifth Wheel Lock Handle Positions.

   7.b **Holland FW35/33/31:** Pull the release handle as shown in Fig.333,FW35 Holland Lock Open and Closed.

   7.c **Holland FW17 and FWAL:** Slide the handle forward to move the front notch on the locking plate clear of the bracket.

   Pull the handle completely out.

   Slide the handle forward again to hook the rear notch on the locking plate onto the bracket as shown in Fig. 334,Unlocking a Holland FW17 or FWAL.

   7.d **Jost:** Depending on the fifth wheel either:

   Lift the release handle up into the wide slot and then pull the release handle out while moving it forward as shown in Fig.335,Unlocking the Jost Fifth Wheel. Then lock the handle into the open position on the notch provided.

   Or, in the event of a failure in the air release system, pull the handle directly out and hook it open on the notch as shown in Fig.331,Jost Release Handle Unlocked.

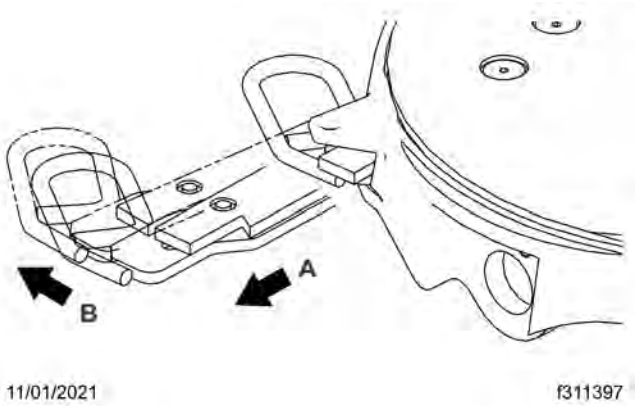

A. Pull the retractable handle out.

B. Hook the handle open using the notch.

Fig 333, Jost Release Handle Unlocked

8. Release the tractor parking brake then drive forward slowly, allowing the trailer to slide down the fifth wheel and off the ramps.

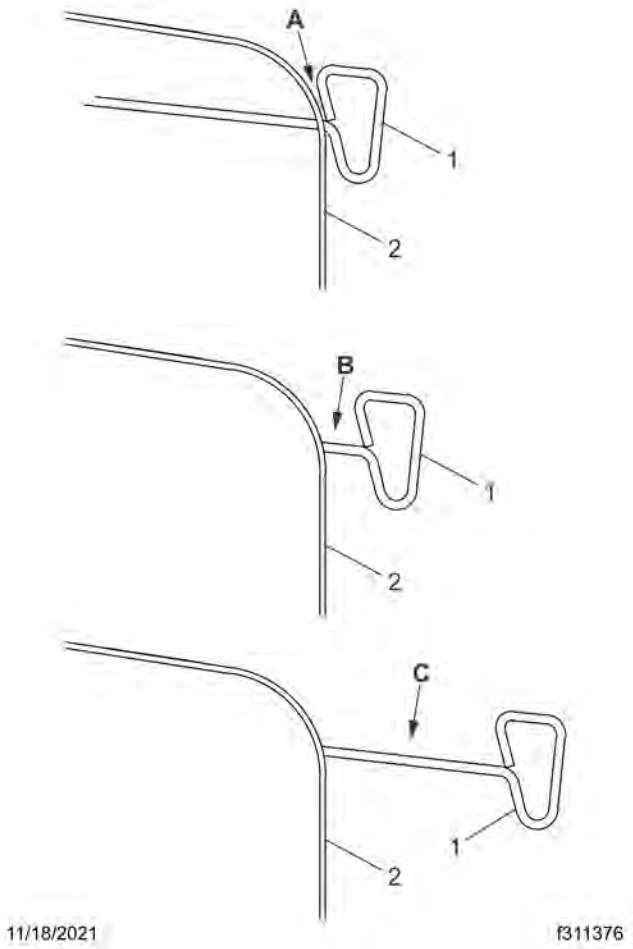

A. The base of the pull handle within 1 inch of the fifth wheel indicates the fifth wheel jaws are locked.
B. A gap of more than 1 inch between the pull handle and fifth wheel indicates the fifth wheel jaws are partially open.
C. A fully extended pull handle indicates the fifth wheel jaws are open.
1. Pull Handle
2. Fifth Wheel

Fig 334, Fontaine Fifth Wheel Lock Handle Positions

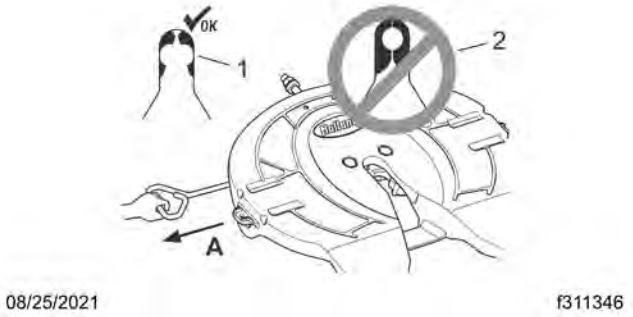

A. Pull the release handle to open the lock.
1. Lock Open
2. Lock Closed

Fig 335, FW35 Holland Lock Open and Closed

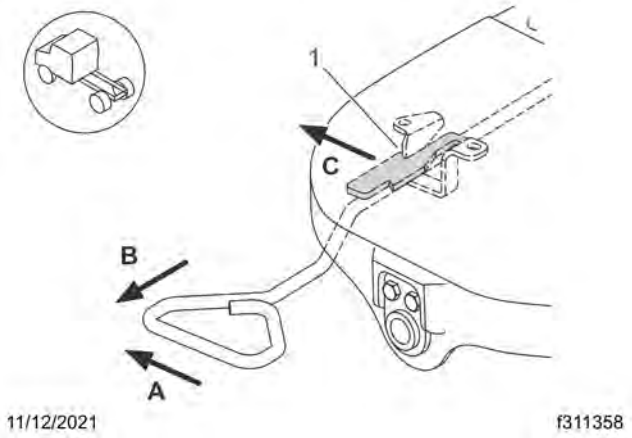

1. Locking Plate Rear Notch

Fig 336, Unlocking a Holland FW17 or FWAL

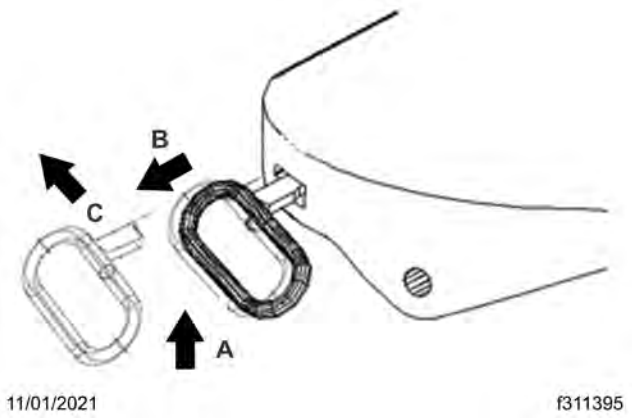

A. Lift the release handle up into the wide slot.
B. Pull the handle out.
C. While pulling the handle out, move it forward.

Fig 337, Unlocking the Jost Fifth Wheel

19.03.02 Air-Actuated Uncoupling

A dash-mounted kingpin release switch (if so equipped) may be used to uncouple the trailer. See Fig. 336,Kingpin Release Switch.

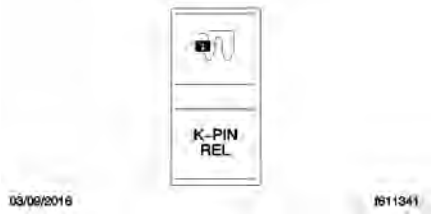

Fig 338, Kingpin Release Switch

NOTE: In the event of an air system failure, air-actuated kingpins can be manually released following the instructions for manual uncoupling. If there is an issue, see Fig.337,Kingpin Release Not Confirmed Popup, ICUC should appear on the driver's display screen.

Fig 339, Kingpin Release Not Confirmed Popup, ICUC

WARNING:

Once the kingpin release switch has been pushed, the kingpin lock is released. The vehicle MUST NOT be driven with the trailer until the trailer has been uncoupled and coupled again. Failure to do so may result in separation of the trailer from the tractor, possibly causing serious personal injury or death.

19.03.03 Preparing the Trailer for Uncoupling

Before using the air valve to unlock a fifth wheel kingpin, prepare the trailer as follows.

1. Slowly back the tractor tightly against the trailer to relieve pressure on the fifth wheel locks.
2. Apply the tractor and trailer parking brakes.
3. Chock the trailer rear wheels.
4. Lower the trailer landing gear until the weight is removed from the fifth wheel.
5. Disconnect the tractor-to-trailer air lines and electrical cable. Plug the air lines to prevent dirt or foreign material from entering the lines.

19.03.04 Air-Activated Kingpin Unlock

NOTE: The kingpin release will not activate if the vehicle is moving, the parking brake is not set, or if the switch is pushed for less than 3 seconds. Unless all of these conditions are met, the trailer will not be uncoupled.

If the kingpin release switch is pressed for less than 3 seconds, see Fig. 338,Kingpin Release Not Activated Popup, ICUC. will appear on the driver display. Press the back arrow to dismiss the popup.

Fig 340, Kingpin Release Not Activated Popup, ICUC

1. Verify that both the yellow parking-brake and red trailer-air supply knobs are out, the tractor and trailer parking brakes are set, and that the trailer is prepared for uncoupling.
2. Push and hold the kingpin release switch, shown in Fig.340,Kingpin Release Switch, for a minimum of 3 seconds. The system will apply air for 20 to 30 seconds to ensure the kingpin unlocks. When the kingpin is unlocked, a notification is displayed as shown in Fig.339,Kingpin Release Alert Screen, ICUC.
3. Release the tractor parking brake.
4. Drive out from under the trailer.

Fig 341, Kingpin Release Alert Screen, ICUC

Fig 342, Kingpin Release Switch

19.04 Fifth Wheel Slide

19.04.01 Fifth Wheel Slide

WARNING:

Adjust the fifth wheel slide correctly. Do not overload any tractor axle by incorrectly loading the trailer.

Incorrect slide adjustment or improper axle loading could cause erratic steering and loss of vehicle control, possibly resulting in serious personal injury or death.

On sliding fifth wheel assemblies, the fifth-wheel plate is attached to rails that allow forward and rearward movement of the fifth wheel to optimally distribute the load across the axles. Slots are evenly spaced along the slide rails, and retractable wedges are positioned through the slots to hold the fifth wheel in the desired position.

The amount of load distribution on the front steering axle and rear drive axle(s) will have a direct effect on the steering control of the vehicle. Determine the front and rear axle weights by weighing the vehicle on scales designed for this purpose.

The maximum axle weight ratings are shown on the Federal Motor Vehicle Safety Standard (FMVSS) label or Canadian Motor Vehicle Safety Standard (CMVSS) label; see the 'Vehicle Identification' chapter for the location of these labels on your vehicle. The desired load on the axle is no less than 80 percent of the maximum axle weight rating, but in no instances should the axle load exceed the maximum axle weight rating given on the FMVSS or CMVSS label.

Fifth Wheel Slide Control Switch

NOTICE:

Do not activate the fifth wheel slide control valve while the vehicle is in motion. To do so could cause damage to the fifth wheel member, the kingpin, the cab or trailer, and ultimately to the drivetrain.

The fifth wheel air slide switch operates an air cylinder that locks and unlocks the slide. See Fig. 341, **Fifth Wheel Slide Control Switch**.

Fig 343, Fifth Wheel Slide Control Switch

Moving the air slide control valve switch to the lock position deactivates the control valve and locks the fifth wheel to the baseplate. Moving the switch to the SLIDE position activates the control valve and unlocks the fifth wheel slide mechanism, allowing changes to the total length of the tractor-trailer and changes to axle loads to comply with varying jurisdictional laws.

19.04.02 Air Slide Operation

1. Set the air-slide switch to SLIDE.

   Ensure the locking plungers have released.

   For **Fontaine** fifth wheels, see Fig.342,Locked Fontaine Air-Operated Sliding Fifth Wheel and Fig. 343,Unlocked Fontaine Air-Operated Sliding Fifth Wheel for depictions of the locked and unlocked states.

   For **Holland** fifth wheels, the locking plungers retract as shown in Fig. 344, **Holland Air-Operated Sliding Fifth Wheel**.

   For **Jost** fifth wheels, the mechanism activates as shown in Fig.345,Jost Sliding Fifth Wheel.

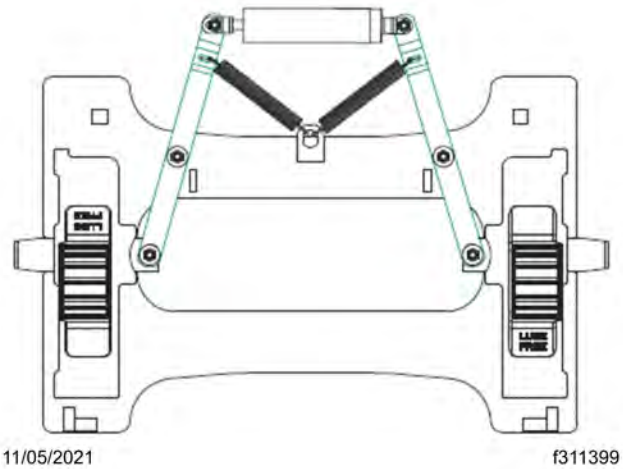

Fig 344, Locked Fontaine Air-Operated Sliding Fifth Wheel

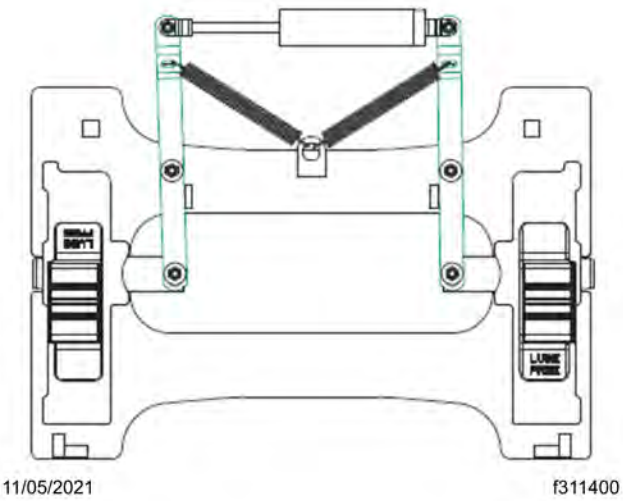

Fig 345, Unlocked Fontaine Air-Operated Sliding Fifth Wheel

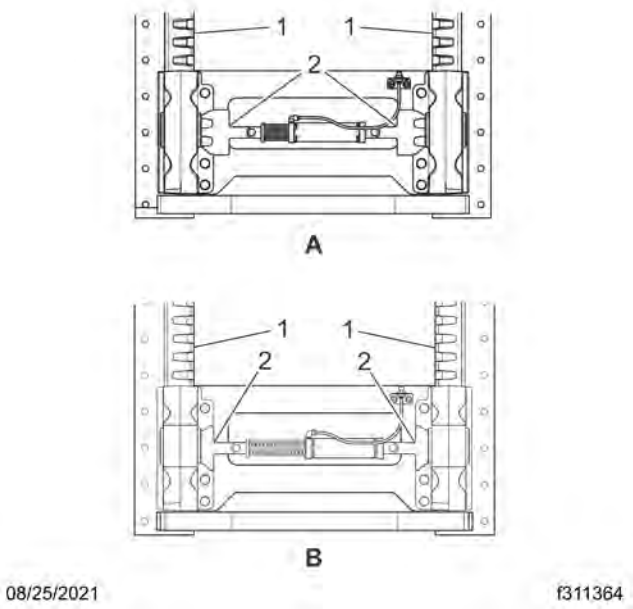

Fig 346, Holland Air-Operated Sliding Fifth Wheel

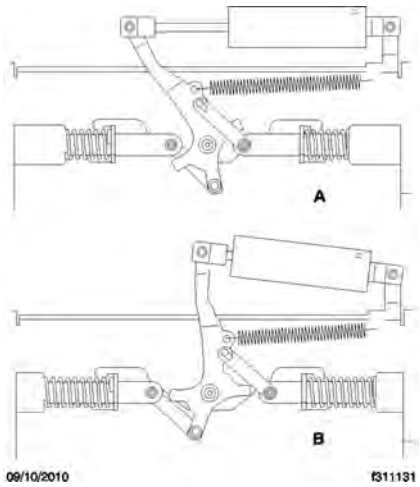

Fig 347, Jost Sliding Fifth Wheel

2. Lower the trailer landing gear just enough to remove the weight from the tractor.
3. Pull the red trailer-air-supply knob to set the trailer-parking brakes.
4. Slowly move the tractor forward or backward until the fifth wheel is in the desired location.

NOTE: Ensure the trailer landing gear does not come in contact with the tractor frame or other components, and that the front of the trailer will not come in contact with the rear of the cab or other components if they extend beyond the rear of the cab.

5. Apply the tractor parking brakes.

WARNING:
Check that the locking wedges have seated in the slots. Failure to achieve complete lockup may allow disengagement of the tractor from the trailer, possibly resulting in serious personal injury or death.

6. Set the air-slide switch to LOCK. Visually inspect the locking wedges or plungers to make sure that they are fully inserted in the slide rail slots. The fifth wheel may need to be moved slightly to enable the locking wedges to fully lock.

   Further verify that the plungers have engaged by tugging the tractor forward while the trailer brakes are locked and the wheels are chocked.

20.01 General Information 362
20.02 Trailer Hookup for Premier #2300 and #2400 Air Pintle Hitch 362
20.03 Trailer Release for Premier #2300 and #2400 Air Pintle Hitch 363
20.04 Trailer Hookup for Premier #270 Air Pintle Hitch 363
20.05 Trailer Release for Premier #270 Air Pintle Hitch 364
20.06 Trailer Hookup for Premier #370 Air Pintle Hitch 365
20.07 Trailer Release for Premier #370 Air Pintle Hitch 366

20. Trailer Couplings

20.01 General Information

NOTE: Go to the Premier Manufacturing web site**www.premier-mfg.com**for additional information.

Premier trailer couplings are rigid-type pintle hooks used on tractor applications and are fastened to the rear closing cross-member of the vehicle. They are air-adjusted couplings.

20.02 Trailer Hookup for Premier #2300 and #2400 Air Pintle Hitch

1. Chock the front and rear tires of the trailer.
2. While facing the coupling, push the latch lock toward the mounting plate as far as it will go. Hold it in this position as you pull the top of the latch outwards as far as it will go. Then slowly release the latch lock until it has rotated into the latch. Release the latch. See Fig.346,Premier #2300 Air Pintle Hitch (#2400 similar) for part names.

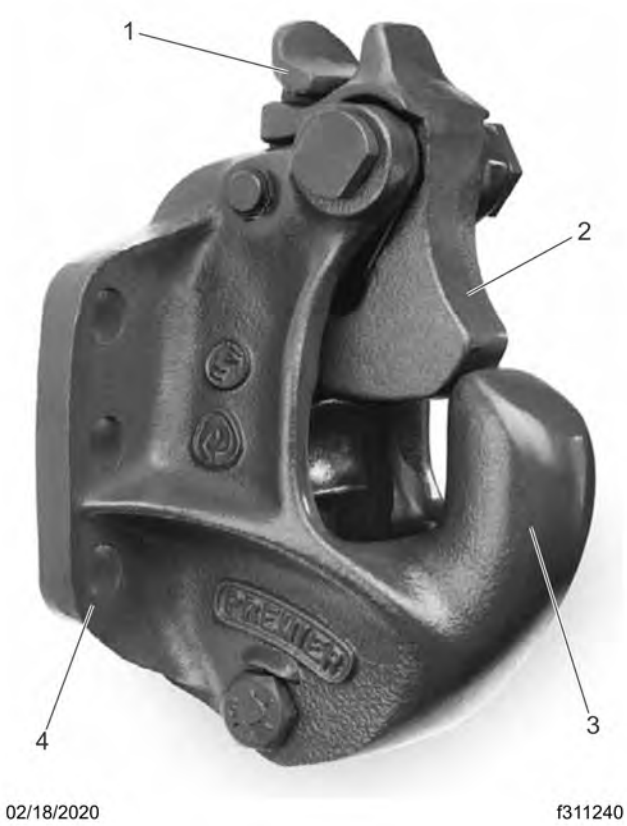

1. Latch Lock
2. Latch
3. Pintle Hook
4. Mounting Plate

Fig 348, Premier #2300 Air Pintle Hitch (#2400 similar)

3. Back up the vehicle until the drawbar eye is over the pintle hook.
4. Lower the trailer, until the drawbar eye rests on the pintle hook.
5. Pull the top of the latch toward the pintle as far as it will go and push the latch lock back toward the mounting plate as far as it will go. Holding the latch lock, slowly release the latch, then release the latch lock, making sure it seats in the slot on the top of the latch.

NOTICE:
Always make sure the connection hanger keeps the trailer air hoses and electrical cables positioned so that they do not rub on anything. Rubbing may wear through hoses or cables, resulting in air leaks, or exposed or broken wires, potentially affecting trailer brake or electrical systems.

NOTE: to test for proper latching, apply some force on the front of the latch down near the top of the pintle. The latch should **not** open. If the latch does not stay closed, do not use until it has been repaired or replaced.

6. Connect the trailer electrical and air lines.

20.03 Trailer Release for Premier #2300 and #2400 Air Pintle Hitch

1. Apply the tractor and trailer parking brakes.

WARNING:
Do not use the trailer air supply for parking trailers not equipped with spring parking brakes. This applies the trailer service brakes only. As air bleeds from the trailer brake system, brake application is lost. This could allow the unattended vehicle to roll away, possibly resulting in serious personal injury or death.

2. Chock the front and rear tires of the trailer.
3. Disconnect the trailer air and electrical lines. Plug the air lines to keep them free of dirt.
4. Take the weight of the trailer drawbar off the pintle hook.
5. Push the latch lock toward the mounting plate as far as it will go. Hold it in this position as you pull the top of the latch outwards as far as it will go. Then release the latch lock so it rotates into the latch. Release the latch.
6. Slowly drive the vehicle away from the trailer.

20.04 Trailer Hookup for Premier #270 Air Pintle Hitch

1. Chock the front and rear tires of the trailer.
2. Pull the pawl out toward the left as far as it will go and then rotate it upward. Holding the pawl in place, rotate the latch upward near the underside of the pawl, then release the pawl. The underside ledge of the pawl will catch the flat front surface of the latch, interlocking the two into the open position. See Fig.347,Premier #270 Air Pintle Hitch.

1. Pawl
2. Latch
3. Pintle Hook
4. Mounting Plate

Fig 349, Premier #270 Air Pintle Hitch

3. Back up the vehicle until the drawbar eye is over the pintle hook.
4. Lower the trailer, until the drawbar eye rests on the pintle hook.
5. Rotate the handle of the pawl upward, releasing the latch. The latch should rotate downward by itself until stopped by the pintle. Then allow the pawl to rotate downward until it engages the latch at its matching machined face.

NOTICE:

Always make sure the connection hanger keeps the trailer air hoses and electrical cables positioned so that they do not rub on anything. Rubbing may wear through hoses or cables, resulting in air leaks, or exposed or broken wires, potentially affecting trailer brake or electrical systems.

NOTE: There are two tests for proper latching. First, attempt to rotate the pawl directly up. The pawl should **not** open. Second, apply an upward force to the bottom of the latch. There should only be minimal movement and the latch should **not** open. If the pawl or latch does not stay closed, do not use until it has been repaired or replaced.

6. Connect the trailer electrical and air lines.

20.05 Trailer Release for Premier #270 Air Pintle Hitch

1. Apply the tractor and trailer parking brakes.

WARNING:
Do not use the trailer air supply for parking trailers not equipped with spring parking brakes. This applies the trailer service brakes only. As air bleeds from the trailer brake system, brake application is lost. This could allow the unattended vehicle to roll away, possibly resulting in serious personal injury or death.

2. Chock the front and rear tires of the trailer.
3. Disconnect the trailer air and electrical lines. Plug the air lines to keep them free of dirt.
4. Take the weight of the trailer drawbar off the pintle hook.
5. Pull the pawl out toward the left as far as it will go and then rotate it upward. Holding the pawl in place, rotate the latch upward near the underside of the pawl, then release the pawl. The underside ledge of the pawl will catch the flat front surface of the latch, interlocking the two into the open position.
6. Slowly drive the vehicle away from the trailer.

20.06 Trailer Hookup for Premier #370 Air Pintle Hitch

1. Chock the front and rear tires of the trailer.
2. Rotate the locking pawl toward the mounting plate as far as it will go. Holding the locking pawl in this position, rotate the pawl up until it stops on the locking pawl. Holding the pawl in this position, rotate the latch upward until it stops in the fully open position. Holding the latch open, slowly release the pawl. The underside ledge of the pawl will catch the flat front surface of the latch, interlocking the two into the open position. See Fig.348,Premier #370 Air Pintle Hitch.

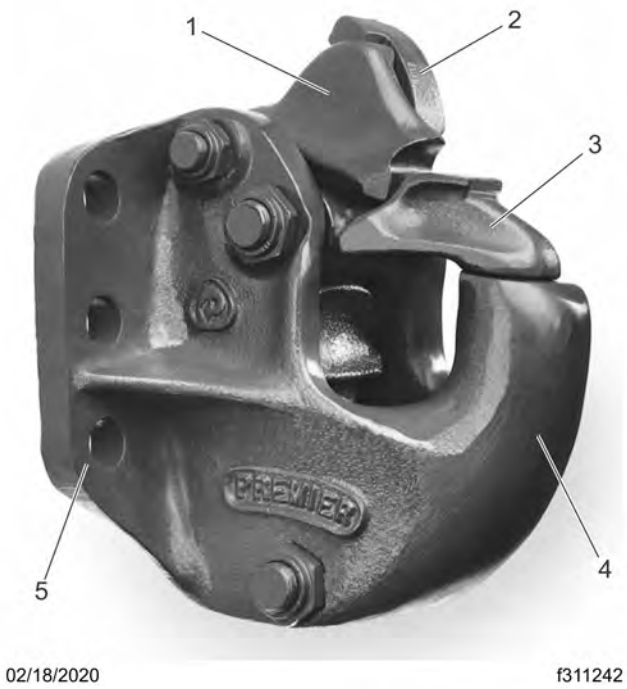

1. Pawl
2. Locking Pawl
3. Latch
4. Mounting Plate

Fig 350, Premier #370 Air Pintle Hitch

3. Back up the vehicle until the drawbar eye is over the pintle hook.
4. Lower the trailer, until the drawbar eye rests on the pintle hook.
5. Rotate the pawl toward the mounting plate to the fully open position, releasing the latch. The latch should rotate downward by itself until stopped by the pintle. Release the pawl to rotate down and engage the latch at its matching machined face. The locking pawl will rotate down into the recessed pocket of the pawl.

NOTICE:

Always make sure the connection hanger keeps the trailer air hoses and electrical cables positioned so that they do not rub on anything. Rubbing may wear through hoses or cables, resulting in air leaks, or exposed or broken wires, potentially affecting trailer brake or electrical systems.

NOTE: Verify proper latching by applying upward force to the bottom of the latch. There should only be minimal movement and the latch should **not** open. If the pawl or latch does not stay closed, do not use until it has been repaired or replaced.

6. Connect the trailer electrical and air lines.

20.07 Trailer Release for Premier #370 Air Pintle Hitch

1. Apply the tractor and trailer parking brakes.

WARNING:

Do not use the trailer air supply for parking trailers not equipped with spring parking brakes. This applies the trailer service brakes only. As air bleeds from the trailer brake system, brake application is lost. This could allow the unattended vehicle to roll away, possibly resulting in serious personal injury or death.

2. Chock the front and rear tires of the trailer.
3. Disconnect the trailer air and electrical lines. Plug the air lines to keep them free of dirt.
4. Take the weight of the trailer drawbar off the pintle hook.
5. Rotate the locking pawl toward the mounting plate as far as it will go. Holding the locking pawl in this position, rotate the pawl up until it stops on the locking pawl. Holding the pawl in this position, rotate the latch upward until it stops in the fully open position. Holding the latch open, slowly release the pawl. The underside ledge of the pawl will catch the flat front surface of the latch, interlocking the two into the open position.
6. Slowly drive the vehicle away from the trailer.

21.01 Headlights 370
21.02 Headlight Aim Check 371
21.02.01 Headlight Aiming, Preliminary Checks 371
21.02.02 Headlight Aim Check 371
21.03 Adjustment of the Headlight Aim 373
21.04 Replacement of the LED Headlamp 375
21.05 Headlight Defogging and Deicing 376

21. Headlights

21.01 Headlights

Each light-emitting diode (LED) headlamp assembly houses a high and low beam headlamp, a turn signal/accent lamp, and a de-icing lens heating system that includes an internal thermometer.

Neither the lamps nor the internal thermometer can be replaced; the LED headlight must be replaced as an assembly.

Headlight aiming should be checked every time a headlamp assembly is replaced or the hood is removed, installed, or adjusted.

If the headlights need to be cleaned, use a soft cloth, water, and mild, non-caustic soap or detergent.

Heated Headlamps

Activation of the LED headlights heated lens system depends on a number of conditions. See Table.43,LED Heated Lens System Activation Conditions.

If the ambient outside temperature is less than 41°F (5°C) when the ignition is turned on, and the battery voltage is above 13V, the heated lenses will turn on for five minutes.

The heated lenses can also be activated by pressing the mirror heat switch or, if equipped, the heated windshield switch.If the engine is running and the ambient outside temperature is less than 68°F (20°C) when one of these switches is pressed, the heated lens system will start cycling: twenty minutes on, twenty minutes off.

If the temperature reaches or exceeds 68°F (20°C) after one of these switches is pressed, the heated lens system turns off. It starts cycling on and off again if the temperature drops below 68°F (20°C) and all other activation conditions are met. Pressing either switch does not turn the LED heated lens system off. Turning the ignition off turns off the LED heated lens system.

Table 43, LED Heated Lens System Activation Conditions

LED Heated Lens System Activation Conditions					
Heated Item	**Conditions**				**Behavior**
	Switch	**Outside Temperature**	**Battery Voltage**	**Engine Speed**	
LED Heated Lens System	Ignition On	Less than 41°F (5° C)	Above 13V	N/A	Turns on for 5 minutes then turns off.
Mirror Heat	Mirror Heat Switch ON	Less than 28°F (-2° C)	Above 13V	Greater than 450 rpm	Cycles on and off in 20 minute increments as long as all conditions are met.
LED Heated Lens System	Mirror Heat Switch ON	Less than 68°F (20° C)	Above 13V	Greater than 450 rpm	Cycles on and off in 20 minute increments as long as all conditions are met.
Windshield Heat*	Heated Windshield Switch ON*	Less than 28°F (-2° C)	Above 13V	Greater than 450 rpm	Turns on and stays on as long as all conditions are met.
LED Heated Lens System*	Heated Windshield Switch ON*	Less than 68°F (20° C)	Above 13V	Greater than 450 rpm	Cycles on and off in 20 minute increments as long as all conditions are met.

Table 43, LED Heated Lens System Activation Conditions

* When the heated windshield feature is available.

21.02 Headlight Aim Check

21.02.01 Headlight Aiming, Preliminary Checks

Before checking or adjusting the aim of the headlights, do the following.

- Check that the hood is closed and latched.
- Remove any large amounts of mud or ice from the underside of the fenders.
- Check the springs for sagging or broken leaves.
- Check the suspension for proper functioning of the leveling mechanism. On cabs with air suspensions, make sure the height is properly adjusted.
- Check for damage to the hood and hinge assembly. Repair as necessary.
- With the vehicle unloaded, check that the tires are inflated to the recommended air pressure.
- Clean the headlight lenses.

21.02.02 Headlight Aim Check

1. Park the vehicle on a level surface, 25 ft (7.6 m) away from, and perpendicular to, a vertical screen or wall. Shut down the engine and set the parking brake. Chock the tires
2. Each headlight has a height adjusting dot on the lens in front of the low beam lamp. See Fig. 349,Measuring From the Ground to the Height Adjusting Dot. Measure the distance from the ground to the height adjusting dot on each headlight and make a note of these measurements.

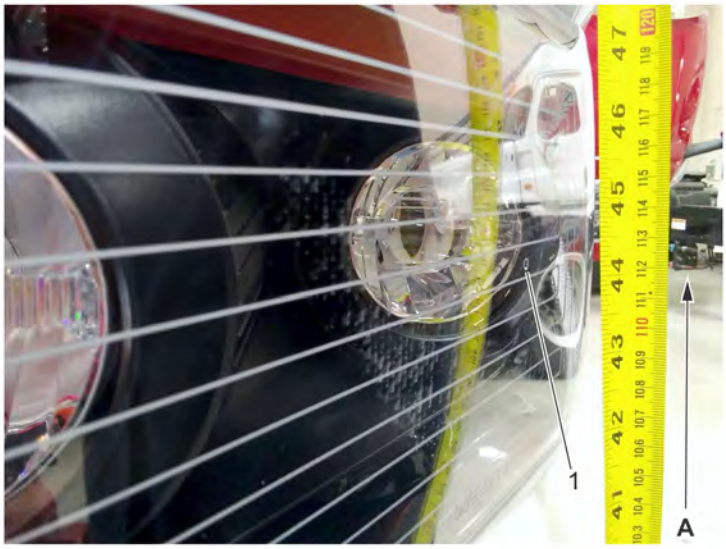

06/08/2020 f547195a

A. Measure the distance from the ground to the height adjusting dot.

1. Height Adjusting Dot in Front of the Low Beam Lamp

Fig 351, Measuring From the Ground to the Height Adjusting Dot

3. On the screen or wall, mark the locations of each headlight bulb center using the measurements made in step 2. See Fig.350,Headlight Aiming Screen/Wall, items 2 and 3.

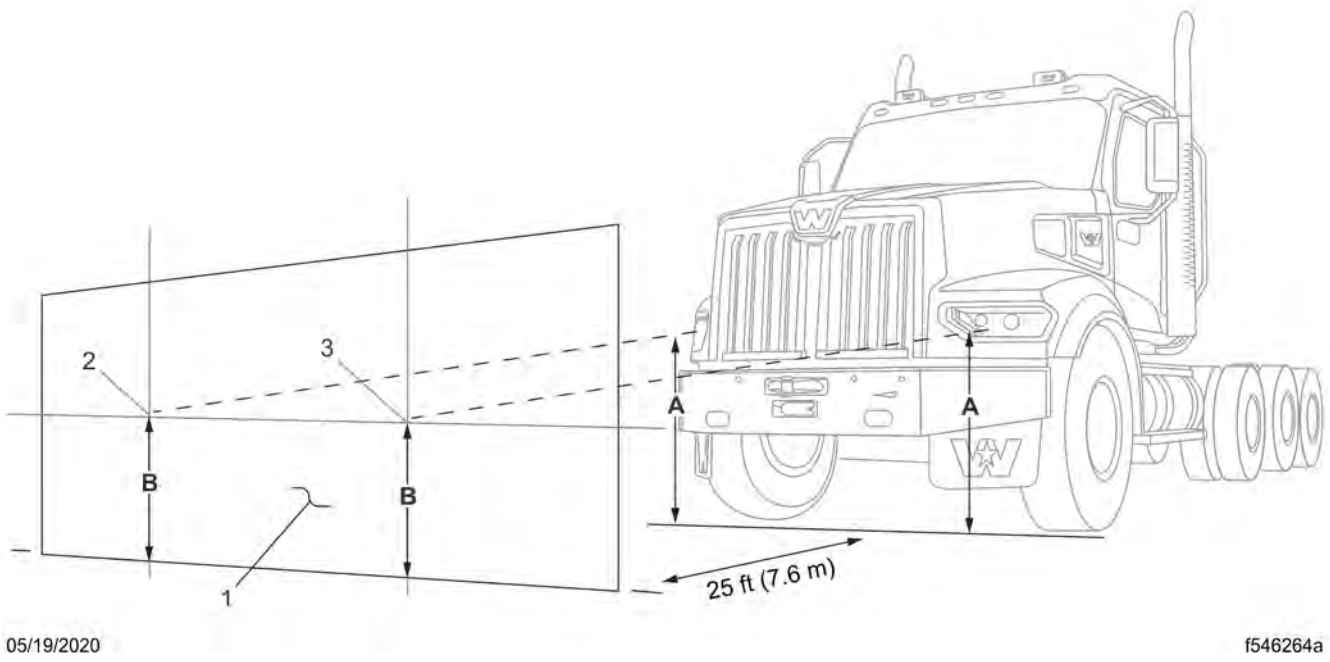

Fig 352, Headlight Aiming Screen/Wall

4. Turn on the low-beam headlights.
5. Check the vertical adjustment of the low beams. The center of each beam projection should fall on or near the marks made during step 3. See Fig.351,Vertical Low-Beam Headlight Variation Limits.

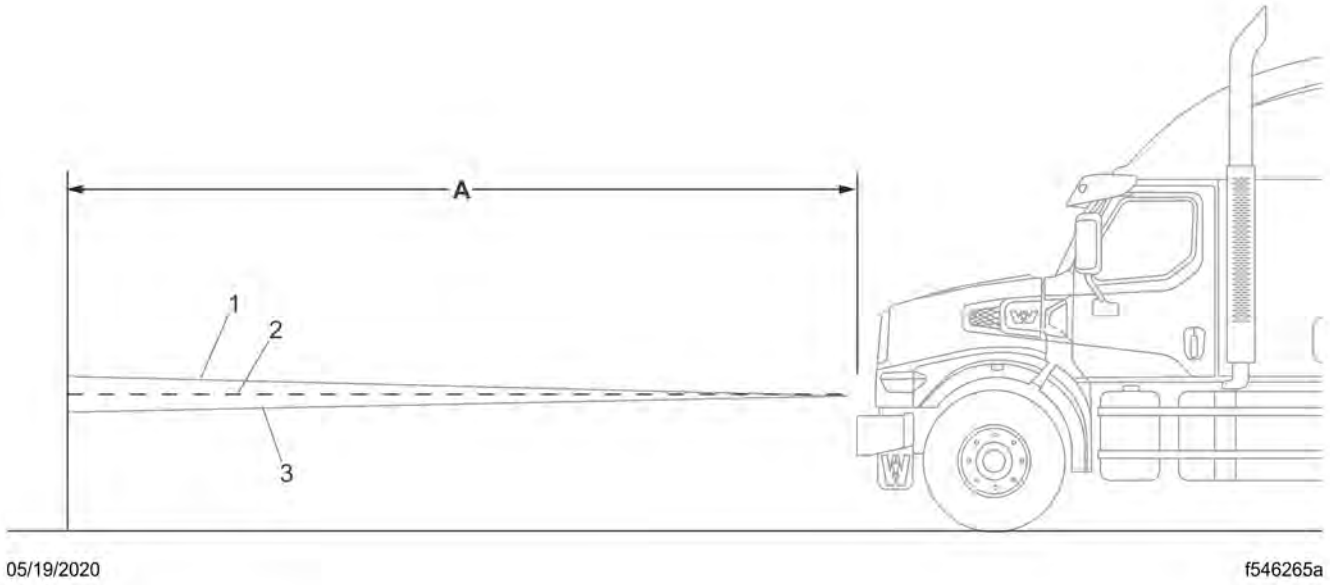

A. Measurement
1. Low-Beam Angle Upper Limit
2. Ideal Low-Beam Projection
3. Low-Beam Angle Lower Limit

Fig 353, Vertical Low-Beam Headlight Variation Limits

6. Use Table.44,Vertical Low-Beam Headlight Variation Limits to determine the maximum vertical distance allowable between the marks on the wall and the center of each low-beam projection.

   If the distance between either projection center and the mark made on the wall or screen is greater than the maximum distance given in Table.44,Vertical Low-Beam Headlight Variation Limits, adjust the vertical positioning of that headlight.

Table 44, Vertical Low-Beam Headlight Variation Limits

Vertical Low-Beam Headlight Variation Limits			
Distance Between Ground and Headlight inches (mm)	**Desired Variation, shown in Fig. 351,Vertical Low-Beam Headlight Variation Limits, Item 2**	**Upper Limit, shown in Fig. 351,Vertical Low-Beam Headlight Variation Limits, Item 1 inches (mm)**	**Lower Limit, shown in Fig. 351,Vertical Low-Beam Headlight Variation Limits, Item 3 inches (mm)**
22–36 (560–900)	0	3.9 (100)	3.9 (100)
36–48 (900–1200)	2 (50) down	2 (50)	6 (150)
48–54 (1200–1400)	4 (101.6) down	1.6 (40)	6.5 (165)

Table 44, Vertical Low-Beam Headlight Variation Limits

21.03 Adjustment of the Headlight Aim

NOTICE:
Do not use power tools to adjust headlight aim. Doing so will strip or break the adjusting screw.

The adjusting screw is located on the bottom of the headlight assembly and is accessible from inside the wheel well when the hood is closed. See Fig. 352,Headlight Adjusting Opening (shown with hood open).

Fig 354, Headlight Adjusting Opening (shown with hood open)

1. Access the headlight adjusting opening.
2. Remove the plug.
3. Use a 6mm Allen key to the adjust the screw (see Fig.353,Headlight Adjusting Screw (shown with hood open)) until the beam standard meets the acceptable standard. Adjusting the screw clockwise raises the beam and adjusting it counterclockwise lowers it.

Fig 355, Headlight Adjusting Screw (shown with hood open)

21.04 Replacement of the LED Headlamp

Light-emitting diode (LED) headlights must be replaced as an assembly. No part of the assembly can be individually replaced.

1. Unlatch and open the hood.
2. Remove the four nuts holding the headlight assembly in place. See Fig. 354,Remove the Headlight Assembly Fasteners.

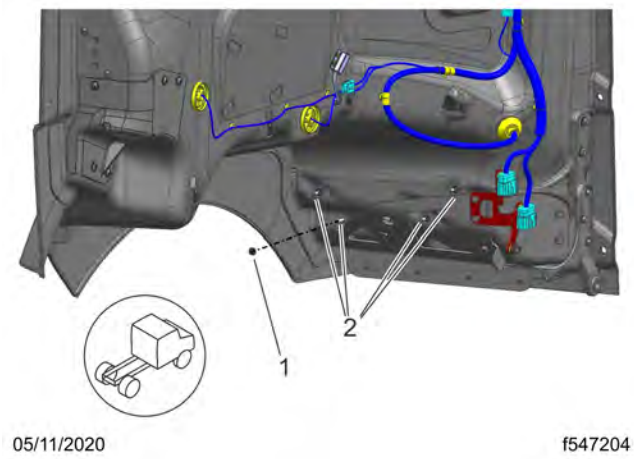

1. Nut
2. Fasteners

Fig 356, Remove the Headlight Assembly Fasteners

NOTE: Do not disconnect the electrical connector before removing the headlight assembly.

3. Remove the headlight assembly. See Fig.355,Headlight Assembly Removed and Disconnected.

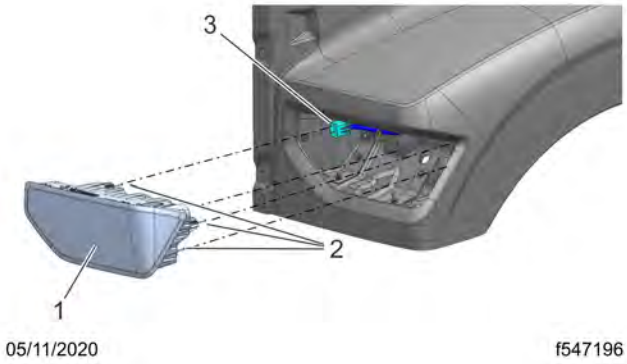

1. Headlight Assembly
2. Four Integral Fasteners
3. Electrical Connector

Fig 357, Headlight Assembly Removed and Disconnected

NOTE: Headlamp connectors have been redesigned to be more resistant to leaks and may be more difficult to disconnect.

4. Squeeze the connector lock and slide the red locking tab down to disconnect the electrical connector. Discard the headlamp assembly.
5. Connect the electrical connector to the new headlight assembly and slide the red locking tab up.
6. Position the new headlamp assembly in the vehicle hood. Tighten the bolts to 66 lbf·in (745±100 N·cm)
7. Close and latch the hood.
8. Clean the headlight lens.
9. Check the headlight aim.

21.05 Headlight Defogging and Deicing

With input from temperature sensors, the headlights will defog and deice automatically. Headlight defogging occurs automatically between 41 to 68°F (5 to 20°C) and initializes when the truck is keyed on. Headlight deicing occurs automatically at 41°F (5°C) or lower to melt ice and prevent headlights from icing again.

22.01 Cab Washing and Polishing....378
22.02 Care of Fiberglass Parts....378
22.03 Care of Chrome Parts....378
22.04 Care of Exterior Lights....379
22.05 Dashboard and Instrument Panel Care....379
22.06 Vinyl Upholstery Cleaning....379
22.06.01 General Information....379
22.06.02 Ordinary Dirt....379
22.06.03 Chewing Gum....379
22.06.04 Tars, Asphalts, and Creosote....380
22.06.05 Paint, Shoe Heel Marks....380
22.06.06 Sulfide Stains....380
22.06.07 Nail Polish and Nail Polish Remover....380
22.06.08 Shoe Polish....380
22.06.09 Ball Point Ink....380
22.06.10 Miscellaneous....380
22.07 Leather Upholstery Cleaning....380
22.07.01 Leather Cleaning....380
22.07.02 Grease and Oil-Based Stains....380
22.07.03 Sugar and Water-Based Stains....380
22.07.04 Chewing Gum or Wax....380
22.07.05 Mold or Mildew....381

22. Vehicle Appearance and Care

22.01 Cab Washing and Polishing

IMPORTANT: Carefully read all instructions before using or applying any cleaner or product on the vehicle or components. Failure to follow manufacturers' recommendations can result in damage to the finish.

WARNING:

Do not power wash or steam clean the engine bay in the area of vehicle electrical components, unless specified by vehicle manuals or service literature. Power washing and steam cleaning can cause corrosion, permanently damaging these components, which could result in fire, personal injury, or property damage.

To protect the finish of your new vehicle, follow these guidelines carefully.

- During the first 30 days, rinse your vehicle frequently with water. If the vehicle is dirty, use a mild liquid soap. Do not use detergent.
- During the first 30 days, do not use anything abrasive on your vehicle. Brushes, chemicals, and cleaners may scratch the finish.
- During the first 120 days, do not wax your vehicle.

To extend the life of your vehicle's finish, follow these guidelines.

- Avoid washing your vehicle in the hot sun.
- Always use water. After the cab is completely washed, dry it with a towel or chamois.
- Do not dust painted surfaces with a dry cloth, as this will scratch the paint.
- Do not remove ice or snow from a painted surface with a scraper of any sort.
- To prevent damage to the finish, wax it regularly. Before waxing, if the finish has become dull, remove oxidized paint using a cleaner specifically designed for this purpose. Remove all road tar and tree sap before waxing. Western Star recommends that a quality brand of cleaner or cleaner-polish and polishing wax be used.
- Do not let diesel fuel or antifreeze stand on a painted surface. If either should occur, rinse the surface off with water.
- To prevent rust, have any nicks or other damage on the finish touched up as soon as possible.
- Park your vehicle in a sheltered area whenever possible.

To prevent delamination and deterioration of labels and stickers on the cab, follow these guidlines carefully:

- Do not pressure wash the label or sticker or surfaces near it.
- Do not use strong alkaline soaps on or near the label or sticker.

22.02 Care of Fiberglass Parts

Wash unpainted fiberglass air fairings and shields monthly with a mild detergent, such as dishwashing liquid. Avoid strong alkaline cleansers.

Apply a wax specifically designed for fiberglass.

22.03 Care of Chrome Parts

To prevent rust, keep chrome parts clean and protected at all times. This is especially important during winter driving and in coastal areas where there is exposure to salt air.

When cleaning chrome parts, use clean water and a soft cloth or sponge. A mild detergent may also be used.

Sponge gently, then rinse. If necessary, use a nonabrasive chrome cleaner to remove stubborn rust or other material. Do not use steel wool.

To help protect the chrome after cleaning, apply a coat of polishing wax to the surface. Never use wax on parts that are exposed to high heat, such as exhaust pipes.

22.04 Care of Exterior Lights

Clean the headlight lenses by hand only, using a flannel cloth with mild, non-caustic soap or detergent, and water.

NOTICE:

Do not use a power buffer, paper towels, chemical solvents, or abrasive cleaners on the headlight lens, all of which can remove the UV coating from the surface, and result in yellowing of the lens.

22.05 Dashboard and Instrument Panel Care

NOTICE:

When cleaning the dashboard, instrument panel, or gauge lens covers, do not use Armor-All Protectant®, STP Son-of-a-Gun®, window cleaner, or other equivalent treatments. These cleaners contain vinyl plasticizers which can cause stress crazing in the interior plastic panels and can result in cracking of the panels. Some cleaners can also have an adverse effect on the clear plastic of instrument panels and gauge lens covers, resulting in a foggy or cloudy appearance. This type of damage is not covered by vehicle warranty.

To clean the dashboard, instrument panel, and gauge lens covers, use a cloth dampened with warm soapy water. Make certain to wring the cloth out well before cleaning, as excess water will damage the electrical components.

22.06 Vinyl Upholstery Cleaning

22.06.01 General Information

To prevent soiling, frequent vacuuming or light brushing to remove dust and dirt is recommended. Harsh cleaning agents can cause permanent damage to vinyl upholstery. To preserve the upholstery and prevent damage, carefully review the following sections for recommended cleaning procedures. Waxing or refinishing improves soil resistance and cleanability for all vinyls. Any hard wax, such as that used on automobiles, may be used.

22.06.02 Ordinary Dirt

Wash the upholstery with warm water and mild soap, such as saddle or oil soap. Apply soapy water to a large area and allow to soak for a few minutes, then rub briskly with a cloth to remove the dirt. This can be repeated several times, as necessary.

If dirt is deeply imbedded, use a soft bristle brush after applying the soap.

If dirt is extremely difficult to remove, wall-washing preparations normally found around the home can be used. Powdered cleaners, such as those used for sinks and tiles, are abrasive and must be used with caution as they can scratch the vinyl or give it a permanent dull appearance.

22.06.03 Chewing Gum

Harden the gum with an ice cube wrapped in a plastic bag, then scrape it off with a dull knife. Any remaining traces of gum can be removed with an all-purpose light oil (peanut butter will also work) and wiped off.

22.06.04 Tars, Asphalts, and Creosote

Each of these items stains vinyl after prolonged contact. They should be wiped off immediately and the area carefully cleaned, using a cloth dampened with naphtha.

22.06.05 Paint, Shoe Heel Marks

Paint should be removed immediately. Do not use paint remover or liquid-type brush cleaner on vinyl. An unprinted cloth, dampened with naphtha or turpentine may be used. Use care to prevent contact with parts of the upholstery that are not vinyl.

22.06.06 Sulfide Stains

Sulfide compounds, such as those found in eggs and some canned goods, can stain after prolonged contact with vinyl. These stains can be removed by placing a clean, unprinted piece of cloth over the spotted area and pouring a liberal amount of 6 percent hydrogen peroxide onto the cloth. Allow the saturated cloth to remain on the spot for 30 to 60 minutes. For stubborn spots, allow the hydrogen-peroxide saturated cloth to remain on the area overnight. Use caution to prevent the solution from seeping into the seams, or it will weaken the cotton thread.

22.06.07 Nail Polish and Nail Polish Remover

Prolonged contact with these substances causes permanent damage to vinyl. Careful blotting immediately after contact minimizes damage. Do not spread the liquid during removal.

22.06.08 Shoe Polish

Most shoe polishes contain dyes which penetrate vinyl and stain it permanently. Shoe polish should be wiped off as quickly as possible using naphtha or lighter fluid. If staining occurs, try the procedure used for sulfide stains.

22.06.09 Ball Point Ink

Ball point ink can sometimes be removed if rubbed immediately with a damp cloth, using water or rubbing alcohol. If this does not work, try the procedure used for sulfide stains.

22.06.10 Miscellaneous

If stains do not respond to any of the treatments described above, it is sometimes helpful to expose the vinyl to direct sunlight for up to 30 hours. Mustard, ball point ink, certain shoe polishes, and dyes often bleach out in direct sunlight, leaving the vinyl undamaged.

22.07 Leather Upholstery Cleaning

22.07.01 Leather Cleaning

Use a vacuum with soft brush attachment to remove dust and dirt, especially from crevices. Spot clean with a mild neutral-pH non-detergent liquid soap or a leather cleaner; moisten a micro-fiber cloth with the chosen cleaner and gently scrub the soiled areas. Do not spray the seats. Wipe clear with a clean, dry micro fiber towel. Allow the seat to dry.

22.07.02 Grease and Oil-Based Stains

If still damp, blot the stain then apply a thin layer of absorbent powder such as cornstarch or baking soda. Leave in place for at least ten minutes to soak up the grease or oil. Vacuum up the cornstarch or baking soda.

22.07.03 Sugar and Water-Based Stains

Dabbing from the center to the edges, use a micro fiber cloth to blot the area as dry as possible. If necessary, such as for sticky liquids, wipe the area with a clean dampened cloth and then let air dry. For stubborn stains, rub the area with a cloth dampened with your chosen cleaner then wipe with a clean damp cloth and blot dry.

22.07.04 Chewing Gum or Wax

Harden the gum or wax with an ice cube wrapped in a plastic bag, then scrape it off with a dull knife. Spot clean using the general leather cleaning instructions above.

22.07.05 Mold or Mildew

Use a dry cloth to wipe down the affected surfaces. Wipe it again with a micro-fiber cloth dampened with a mild neutral-pH non-detergent liquid soap or a leather cleaner. Wipe dry with a clean cloth. If mold or mildew stains remain, dampen a cloth with vinegar and gently rub each area, one small section at a time. Be careful not to make any area wet. Allow the leather to dry.

Chapter 23 Pre- and Post-Trip Checklists 23.0

23.01 Periodic Inspections and Maintenance, General Information 384
23.02 Checklists 384
23.02.01 Daily Pretrip Inspection Checklists 384
23.02.02 Weekly Post-trip Inspection Checklist 386
23.02.03 Monthly Post-trip Inspection Checklists 386
23.03 Fluids Added 387

23. Pre- and Post-Trip Checklists

23.01 Periodic Inspections and Maintenance, General Information

It is the driver's responsibility to inspect and ensure the road-worthiness of a vehicle before placing it into service. Commercial vehicles may be subject to inspection by authorized inspectors, and an unsafe vehicle can be taken 'out of service' until the driver or owner repairs it.

Use the following checklists to ensure that vehicle components are in good working condition before each trip. Careful inspections eliminate later unplanned stops to fix overlooked or forgotten items.

The checklists in this chapter can be copied and kept as a record that the procedures have been completed. For details on how to inspect each item on the checklists, see the corresponding procedure (step number) in 24.01 Safety Precautions.

23.02 Checklists

23.02.01 Daily Pretrip Inspection Checklists

NOTE: Checklists in this chapter correspond with the procedures and steps in 24.01 Safety Precautions, *Pre- and Post-Trip Inspections and Maintenance* . Your vehicle may not be equipped with all components listed below.

See the following tables for a list of procedures that should be performed daily, before the first trip. Place a check mark in the complete (**Comp.**) column to indicate a procedure has been performed.

Inspector	Date

Suspension and Slack Adjusters		Comp.
1	Suspension components	
2	Slack adjusters	

Wheels and Tires		Comp.
1	Tire condition	
2	Tire inflation	
3	Rims and wheel components	
4	Wheel bearing oil seals and lubrication levels	
5	Mud Flaps	

Saddle Tank Areas		Comp.
1	Drain air reservoirs (without automatic drain valves)	
2	Fuel tank(s) secure	

3	Frame rails and crossmembers	
4	Visible exhaust components	

Engine Compartment		Comp.
1	Leakage under engine	
2	Air intake system	
3	Engine oil level	
4	Power steering reservoir level	
5	Engine coolant level	
6	Visible engine wiring	
7	Frame rails	

Cab		Comp.
1	Reset dash-mounted air intake restriction indicator (if equipped)	
2	Air pressure warning systems	
3	Air governor cut-in and cut-out pressures	
4	Air pressure build-up time	
5	Air system leakage	
6	Air pressure reserve	
7	Mirrors, windows, windshield	
8	Horn, windshield wipers, windshield washers	
9	Heater and defroster	
10	Interior lights	
11	Exterior lights	
12	Seat belts and tether belts	
13	Fuel level	
14	Mirror adjustment	

15	Service brakes	
16	Backup alarm	

23.02.02 Weekly Post-trip Inspection Checklist

See the following table for procedures that should be performed weekly, post-trip. Place a check mark in the complete (**Comp.**) column to indicate a procedure has been performed.

Inspector	Date

Engine Compartment		Comp.
1	Windshield washer reservoir level	
2	Air intake restriction indicator	
3	Water evacuation components	
4	Automatic transmission fluid level	
5	Water in fuel/water separator	
6	Steering components	
7	Serpentine drive belts	

23.02.03 Monthly Post-trip Inspection Checklists

See the following tables for procedures that should be performed monthly, post-trip. Place a check mark in the complete (**Comp.**) column to indicate a procedure has been performed.

Inspector	Date

Brake Components		Comp.
1	Brake system components	
2	Brake chambers	
3	Air brake lines	
4	Flex air hoses	
5	Brake linings and brake drums	
6	Brake lining thickness	

Saddle Tank Areas		Comp.
1	Drain air reservoirs (with automatic drain valves)	
2	Batteries (location may vary)	
3	Aerodynamic components	

Engine Compartment		Comp.
1	Hood and bumper	
2	Hydraulic clutch reservoir	
3	Radiator and heater hoses	
4	Steering wheel play	

23.03 Fluids Added

Use the following table to note any fluids that were added during the inspection and maintenance procedures.

Fluids Added During Inspection	
Fluid	**Amount Added**
Wheel Bearing Lubricant	
Engine Oil	
Power Steering Fluid	
Engine Coolant	
Windshield Washer Fluid	
Automatic Transmission Fluid	
Hydraulic Clutch Fluid (DOT 4 brake fluid)	

24.01 Safety Precautions 390
24.02 Daily Pretrip Inspections and Maintenance 390
24.02.01 General Information 390
24.02.02 Inspection of the Suspension and Slack Adjuster 390
24.02.03 Inspection of the Wheel and Tire 392
24.02.04 Inspection of the Saddle Tank Areas 394
24.02.05 Engine Compartment Access 396
24.02.06 Inspection of the Engine Compartment 396
24.02.07 Inspection of the Cab 399
24.03 Weekly Post-Trip Inspections and Maintenance 404
24.03.01 Inspection of the Engine Compartment 404
24.04 Monthly Post-Trip Inspections and Maintenance 408
24.04.01 Inspection of the Brake Component 408
24.04.02 Inspection of the Saddle Tank Areas 409
24.04.03 Inspection and Adjustments of the Engine Compartment 410

24. Pre- and Post-Trip Inspections and Maintenance

24.01 Safety Precautions

DANGER:
When working on the vehicle, shut down the engine, set the parking brake, and chock the tires. Before working under the vehicle, always place jack stands under the frame rails to ensure the vehicle can not drop. Failure to follow these steps could result in serious personal injury or death.

24.02 Daily Pretrip Inspections and Maintenance

24.02.01 General Information

Complete the following inspection and maintenance procedures to ensure that vehicle components are in good working condition before each trip. A driver who is familiar with the vehicle and drives it regularly can perform the daily inspections, then add the weekly and monthly post-trip inspections as scheduled.

If the driver does not operate the vehicle on a consistent basis, all daily, weekly, and monthly inspection and maintenance procedures should be performed before the trip.

IMPORTANT: The pre- and post-trip checklists, inspections, and maintenance procedures detailed in this chapter are **not all-inclusive** . See other component and body manufacturers' instructions for specific inspection and maintenance instructions, as well as local, state, and federal guidelines.

NOTE: If any system or component does not pass this inspection, it must be corrected before operating the vehicle. Whenever equipment requires adjustment, replacement, and/or repair, see the *57X Workshop Manual* for procedures and specifications.

24.02.02 Inspection of the Suspension and Slack Adjuster

Walk around the vehicle and visually inspect suspension and slack adjuster components.

1. Inspect the following suspension components for signs of structural damage, cracks, or wear.
   - Springs
   - Spring hangers
   - Shocks
   - Suspension arms
   - Suspension brackets
   - Axle seats
   - Bushings
2. Inspect slack adjusters for signs of damage. See Fig.356,Gunite Automatic Slack Adjuster, Fig. 357,Haldex Automatic Slack Adjuster, or Fig.358,Meritor Automatic Slack Adjuster.

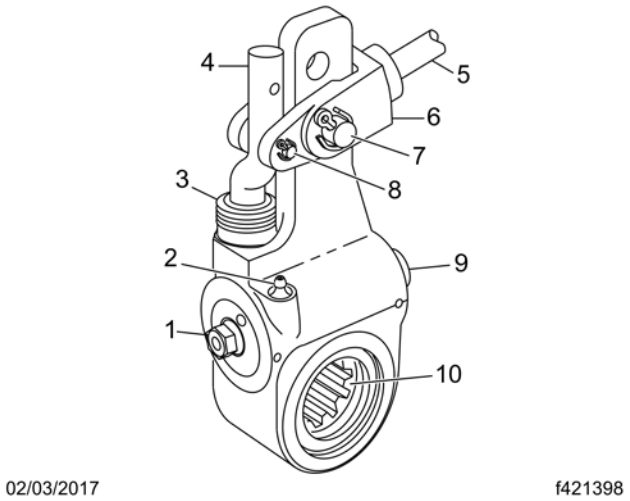

1. 7/16-inch Adjusting Nut
2. Grease Fitting
3. Boot
4. Link
5. Brake Chamber Piston Rod
6. Clevis
7. ½-inch Clevis Pin
8. 1/4-inch Clevis Pin
9. Grease Relief Opening
10. 1Slack Adjuster Spline

Fig 358, Gunite Automatic Slack Adjuster

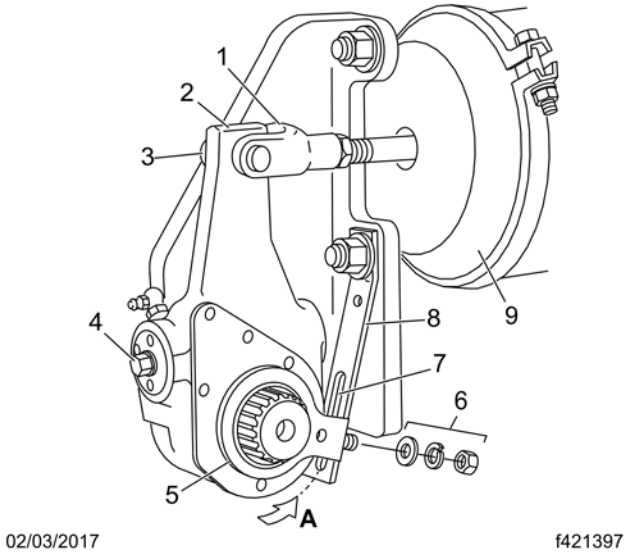

1. Clevis
2. Slack Adjuster
3. Clevis Pin
4. Manual Adjusting Nut
5. Control Arm
6. Control-Arm Washers and Nut
7. Anchor Strap Slot
8. Anchor Strap
9. Brake Chamber

Fig 359, Haldex Automatic Slack Adjuster

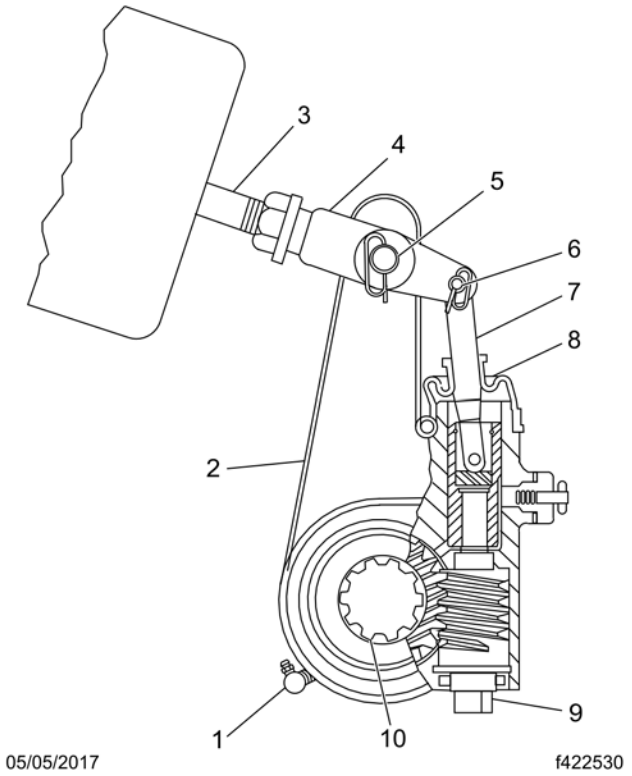

1. Grease Fitting (if equipped)
2. Slack Adjuster Housing
3. Brake Chamber Pushrod
4. Clevis
5. Clevis Pin (large)
6. Clevis Pin (small)
7. Actuator Rod
8. Boot
9. Manual Adjusting Nut
10. Camshaft Splines

Fig 360, Meritor Automatic Slack Adjuster

- Inspect slack adjuster boots, if equipped, for cuts or tears.
- Inspect anchor straps, if equipped, for damage.
- Look for worn clevis pins on brake chamber pushrods.
- Look for missing or damaged cotter pins on the clevis pins.
- Ensure chamber piston rods are in line with the slack adjusters.

24.02.03 Inspection of the Wheel and Tire

Walk around the vehicle and visually inspect each wheel and tire assembly.

1. Inspect each tire for the following:
   - valve stem caps on every tire, screwed on finger-tight
   - bulges, cracks, cuts, and penetrations
   - oil contamination (petroleum derivatives will soften the rubber and destroy the tire)
   - tread depth—if tread is less than 4/32 inch (3 mm) on any front tire, or less than 2/32 inch (1.5 mm) on any rear tire, replace the tire
   - debris lodged between dual tire sets
2. Check tire inflation.

For inflation pressures and maximum loads, see the tire manufacturer's guidelines. Inflate the tires to the applicable pressures if needed.

If a tire has been run flat or under-inflated, check the wheel and tire for damage before adding air.

Keep compressed air reservoirs and lines dry during tire inflation. Use well-maintained inline moisture traps and service them regularly.

WARNING:

Do not operate the vehicle with underinflated or overinflated tires. Incorrect inflation can stress the tires and make the tires and rims more susceptible to damage, possibly leading to rim or tire failure and loss of vehicle control, resulting in serious personal injury or death.

IMPORTANT: The load and cold inflation pressure must not exceed the rim or wheel manufacturer's recommendations, even though the tire may be approved for a higher load inflation. Consult the rim or wheel manufacturer for the correct tire inflation pressure for the vehicle load.

NOTICE:

A weekly pressure loss of 4 psi (28 kPa) or more in a tire may indicate damage. The tire should be inspected and, if necessary, repaired or replaced by a qualified tire service facility.

3. Examine each rim and wheel component.

   3.a Remove all dirt and debris from the assembly. Rust streaks or metal build-up around stud holes, or out-of-round or worn stud holes, may be caused by loose wheel nuts.

WARNING:

Have any worn or damaged wheel components replaced by a qualified person using the wheel manufacturer's instructions and the wheel industry's standard safety precautions and equipment. Otherwise a vehicle or workshop accident could occur, possibly resulting in serious personal injury or death.

   3.b Inspect for broken, cracked, badly worn, bent, rusty, or sprung rings and rims.

NOTICE:

Use the recommended torque values and follow the proper tightening sequence. Insufficient wheel nut torque can cause wheel shimmy, resulting in wheel damage, stud breakage, and extreme tire tread wear. Excessive wheel nut torque can break studs, damage threads, and crack discs in the stud hole area.

3.c Make sure all wheel nuts are tightened. If tightening is necessary, use the tightening pattern in Fig. 359,Tightening Pattern, 10-Hole Wheels to initially tighten the flange nuts to 50 to 100 lbf·ft (68 to 136 N·m). Then tighten the flange nuts to 450 to 500 lbf·ft (610 to 678 N·m).

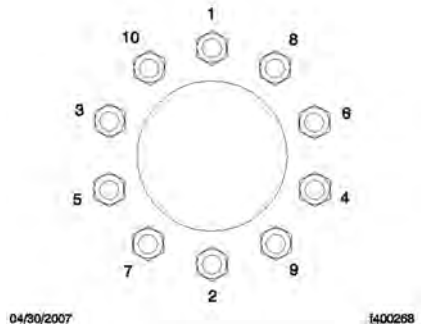

Fig 361, Tightening Pattern, 10-Hole Wheels

4. Inspect the outboard side of all wheel hubs and the hub oil seal area on the inboard side of each wheel for signs of oil leakage. If any oil is found on wheel and tire or brake components, remove the vehicle from service until the leak has been fixed.

   If needed, fill the hubs to the level indicated on the hub cap. See **Group 35** of the *Western Star Maintenance Manual* for recommended lubricants.

5. Check that mud flaps are undamaged and hang 10 inches (25.4 cm) or less from the ground.

24.02.04 Inspection of the Saddle Tank Areas

WARNING:

When draining the air reservoir, do not look into the air jets or direct them toward anyone. Dirt or sludge particles may be in the airstream and could cause injury.

NOTICE:

If the water drained from the air reservoirs is cloudy or oily, it may indicate a problem with the compressor. If oil is allowed to contaminate the air dryer, it will not remove the water from the air brake system, which could adversely affect braking.

1. Drain the brake system air reservoirs (reservoirs without automatic drain valves only).

WARNING:

Never operate the engine with the fuel tank shutoff valves partially closed. This could damage the fuel pump, causing sudden loss of engine power, possibly resulting in serious personal injury due to reduced vehicle control.

2. Ensure fuel tanks are secured to their mounting brackets and that the mounting brackets are secured to the frame.

   If equipped with fuel tank shutoff valves, be sure the valves are fully open.
3. Inspect visible frame rails for missing bolts, shiny areas, or rust streaks. Check all visible crossmembers for damage or signs of looseness.
4. Inspect visible components of the exhaust system to ensure connections are tight.

   Inspect upstream of the aftertreatment device (ATD), if equipped, for cracking or signs of leaks, such as soot trails. Inspect downstream of the ATD for signs of exhaust leaks, such as blistering or warping of nearby components.

24.02.05 Engine Compartment Access

03/09/2021 f881032

1. Rubber Latches
2. Prop-Rod
3. Coolant Reservoir
4. Windshield Washer Reservoir
5. Engine Oil
6. Engine Oil Dipstick
7. Latch Catches

Fig 362, Optional Hood Access Hatch

Left-hand drive vehicles may be equipped with a hood access hatch that provides access to check engine compartment fluid levels. Depending on engine configuration, this can include engine oil, coolant, and windshield washer fluid.

Open the hatch by undoing both rubber latches from the catches, lifting the hatch, and then inserting the prop-rod into the hole on the left-side of the access door opening to hold the hatch open. To close the hatch, click the prop-rod back into its holder, close the hatch, and latch both rubber latches.

24.02.06 Inspection of the Engine Compartment

1. Check the ground underneath the engine for fuel, oil, or coolant leaks.
2. Inspect the air intake system for leaks or damage.

NOTICE:
Failure to maintain a sealed air intake system could allow the entry of dirt and contaminants into the engine. This could adversely affect engine performance and result in engine damage.

2.a Push the reset button on the air intake restriction indicator, if equipped.

NOTE: The air intake restriction indicator may be located on the air intake or the dash.

2.b Check the air intake duct from the air cleaner to the engine intake. Make sure the duct components are secure and airtight.

3. Check the engine oil level.

NOTICE:

Operating the engine with the oil level below the minimum fill (or ‘add’) mark or above the maximum fill (or ‘full’) mark could result in engine damage.

3.a Check the oil level with the vehicle parked on a level surface. See the engine manufacturer's guidelines for engine shutdown time requirements prior to checking the oil level.

IMPORTANT: Use only approved engine lube oil. For lists of engine oils approved for Detroit Diesel engines, refer to the Engine Operator Manual, accessible on Lubricants, Fuels & Coolants on the DTNA Portal. For third party engines, please refer to the engine manual.

3.b If the oil level is at or below the minimum fill (or ‘add’) mark on the dipstick, add enough oil to maintain the level between the minimum and maximum fill marks. See the engine operation manual for recommended lubricants.

4. Check the power steering reservoir fluid level.

The power steering fluid level should be between the MIN COLD mark and the middle mark just above it. See Fig. 361,Power Steering Fluid Reservoir. If needed, fill the reservoir with automatic transmission fluid that meets Dexron III or TES-389 specifications.

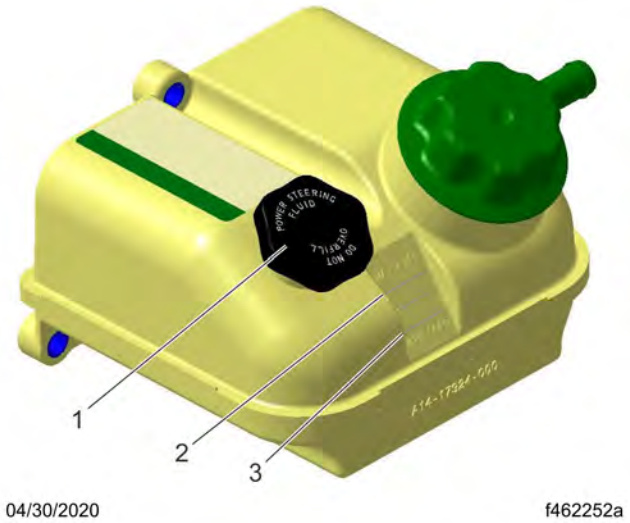

Typical reservoir shown; configurations may vary.

1. Filler Cap
2. MAX Fill Line
3. COLD MIN Fill Line

Fig 363, Power Steering Fluid Reservoir

Typical reservoir shown; configurations may vary.

IMPORTANT: The surge tank must be cool to check the coolant level.

NOTICE:
Low coolant could result in engine overheating, which could cause engine damage.

5. Check the engine coolant level in the radiator surge tank. See Fig.362,Coolant Surge Tank.

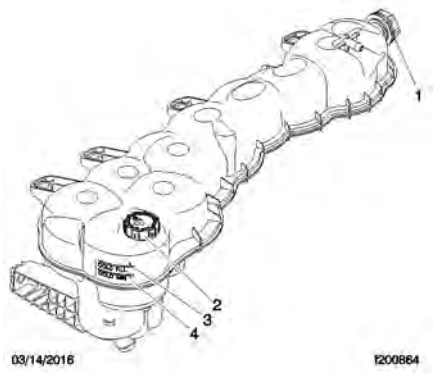

1. Pressure Relief Cap
2. Filler Cap
3. COLD MAX Fill Line
4. COLD MIN Fill Line

Fig 364, Coolant Surge Tank

NOTICE:
Coolant must be filled to the COLD MAX line of the surge tank. Low coolant could result in engine overheating, which could cause engine damage.

5.a If the coolant is low, fill the surge tank to the MAX line with a 50/50 mixture of water and the type of antifreeze currently installed in your vehicle.

5.b If the surge tank was empty, start the engine after refilling and check the level again when the engine is at operating temperature.

6. Inspect visible engine wiring for damage or looseness. Check for loose wiring, chafed insulation, and damaged or loose hold-down clamps.
7. Inspect visible frame rails for missing bolts, shiny areas, or rust streaks.

24.02.07 Inspection of the Cab

1. Push the reset button on the dash-mounted air intake restriction indicator, if equipped.
2. With the ignition switch in the OFF position, check the air-pressure warning system.

NOTE: The low-air warning buzzer only works when the park brake is released. The low-air warning buzzer is silenced when the park brake is set.

2.a If not previously drained, drain the air reservoirs using moderate brake applications until pressure in both reservoirs is less than 70 psi (483 kPa).

2.b Turn the ignition to the ON position. The ICU will complete a full gauge sweep and bulb check, and a low-air warning buzzer will sound. Ensure the low air pressure lamp (BRAKE AIR) remains illuminated and a low-air warning buzzer continues to sound after the gauge sweep is complete.

3. Check air governor cut-in and cut-out pressures.

3.a Start the engine and ensure the BRAKE AIR lamp goes out and the buzzer silences when pressure reaches approximately 70 psi (483 kPa) in both air reservoirs.

The air governor should cut out at approximately 120 psi (827 kPa). For vehicles with an optional dryer reservoir module (DRM), the cut-out pressure is approximately 130 psi (896 kPa).

3.b With the engine idling, apply the brake pedal several times. The air governor should cut in when pressure in the primary air reservoir (top air gauge) reaches approximately 100 psi (689 kPa).

4. Check air pressure build-up time.

4.a With the air system fully charged, make one full brake application and note the air pressure reading on the primary air gauge.

4.b Further reduce air pressure using moderate brake applications, then run the engine at governed rpm.

4.c Note the time that the pressure reaches the previously noted reading on the primary air gauge, then note the time that the air pressure reaches cut-out pressure.

4.d If it takes longer than 30 seconds to reach cut-out pressure after the primary air gauge passes the previously noted pressure (noted after one full brake application), eliminate any leaks or replace the air compressor before operating the vehicle.

5. Check air leakage in the system.

5.a With the parking brake applied, the transmission out of gear, and the air system fully charged, release the service brakes and shut down the engine.

5.b Wait one minute and note the air pressure drop in psi (kPa) per minute from the primary air reservoir.

If the pressure drop exceeds the limits shown in Table.45,Maximum Allowable Air Leakage, eliminate any leaks before operating the vehicle.

6. Check the air pressure reserve.

With the engine still off, make one full brake application and observe the pressure drop on the primary air gauge. If pressure drops more than 25 psi (172 kPa), eliminate any leaks before operating the vehicle.

Table 45, Maximum Allowable Air Leakage

Maximum Allowable Air Leakage		
Description	Pressure Drop: psi (kPa) Per Minute	
	Released	Applied
Truck or Tractor Only	2 (14)	3 (21)
Truck or Tractor w/Single Trailer	3 (21)	4 (28)
Truck or Tractor w/Two Trailers	5 (35)	6 (42)

Table 45, Maximum Allowable Air Leakage

WARNING:
When cleaning windshields and windows, always stand on the ground or on a secure ladder or platform. Use a long-handled window cleaner. Do not use the cab steps, tires, fenders, fuel tanks, engine, or under-hood components to access the windshield or windows. Doing so could cause a fall and result in an injury.

7. Inspect the mirrors, window glass, and windshield for cracks or other damage.
8. Ensure that the horn, windshield wipers, and windshield washers are operating properly. These devices must be in good working order for safe vehicle operation.
9. Ensure the heater and defroster are operating properly.
10. Check the operation of all interior lights.
    - 10.a Turn on the headlights and leave them on. Ensure all equipped gauges illuminate in the instrument cluster.
    - 10.b Ensure all equipped driver control switches illuminate.
    - 10.c Ensure both turn signal indicators illuminate in the instrument cluster when the turn signal switch is activated.
11. Check the operation of all exterior lights. See Fig.363,Exterior Lights.

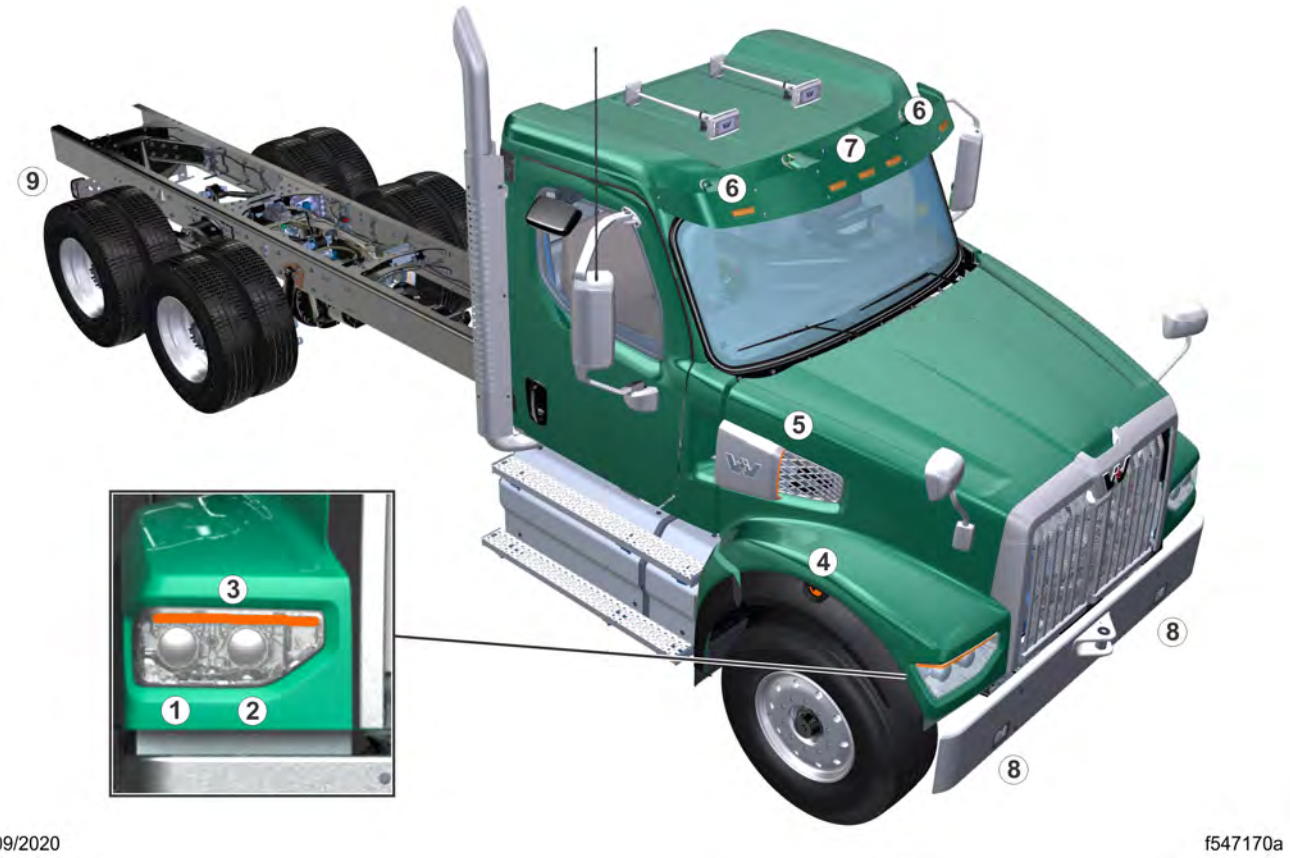

1. Headlight, Low Beam
2. Headlight, High Beam
3. Turn Signal
4. Side Marker Lamp
5. Turn Signal
6. Clearance Lamps
7. Identification Lamps
8. Fog/Driving Lights
9. Stop Lamps, Tail Lamps, Turn Signals, and Back-Up Lamps

Fig 365, Exterior Lights

11.a Turn the ignition switch to the ACC or ON position.

11.b Make certain the service brake is not applied and the parking brake is set.

11.c Press the LIGHT TEST switch on the dash, shown in Fig.364, Pretrip Light Test Switch, to begin the pretrip light inspection.

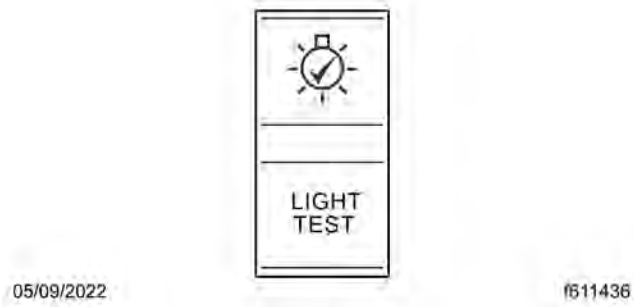

Fig 366, Pretrip Light Test Switch

11.d Activate the high-beam headlights and hazard warning lights.

11.e Exit the cab and check that all exterior lights and reflectors are clean and intact.

11.f Check that the brake lights, taillights, headlights, turn signals, marker lights, identification lights, and clearance lights are working properly.

11.g The pretrip light inspection can be stopped by:

- turning the ignition switch to the OFF position;
- releasing the parking brake;
- press the LIGHT TEST switch on the dash.

12. Inspect the seat belts and tether belts.

WARNING:

Inspect and maintain seat belts. When any part of a seat belt system needs replacement, the entire seat belt must be replaced, both retractor and buckle side. Any time a vehicle is involved in an accident, and the seat belt system was in use, the entire vehicle seat belt system must be replaced before operating the vehicle. Do not attempt to modify the seat belt system; doing so could change the effectiveness of the system. Failure to replace worn or damaged seat belts, or making any modifications to the system, may result in personal injury or death.

12.a Check the web for fraying, cuts, extreme dirt and dust, or for severe fading from exposure to sunlight, especially near the buckle latch plate and in the D-loop guide area.

12.b Check operation of the buckle, latch, Komfort Latch or Sliding Komfort Latch (if equipped), web retractor, and upper seat belt mount on the door pillar. Check all visible components for wear or damage.

12.c Check the seat belt and tether belt connection points and tighten any that are loose.

WARNING:

Never fill fuel tanks to more than 95 percent of their liquid capacity. This could make them more likely to rupture from impact, possibly causing fire and resulting in serious personal injury or death by burning.

Do not mix gasoline or alcohol with diesel fuel. This mixture could cause an explosion, possibly resulting in serious personal injury or death. Do not fill the fuel tanks in the presence of sparks, open flames, or intense heat. These could ignite the fuel, possibly causing severe burns.

IMPORTANT: Use ultralow-sulfur diesel (ULSD) with 15 ppm sulfur content or less. Failure to use ULSD fuel may void the warranty on emission components.

13. Check the fuel level in the fuel tank(s). To keep condensation to a minimum, fuel tanks should be filled at the end of each day.

14. Adjust the rearview and down view mirrors as necessary.

NOTE: Some automated transmission programming prevents or limits the time a drive gear can be engaged while the parking brake is set. Follow any transmission OEM restrictions for operating in gear with the parking brakes engaged.

15. Test the parking brakes.
    - 15.a With the engine running and air system fully charged, set the parking brake.
    - 15.b Put the vehicle in the lowest gear and gently attempt to move it forward. The vehicle should not move.

    If the vehicle moves, the parking brakes are not operating correctly and must be repaired before the vehicle is operated.
16. Test the backup alarm, if applicable.
    - 16.a Release the parking brake and put the transmission in reverse.
    - 16.b Move the vehicle slightly backward to ensure that the backup alarm is operating correctly.

24.03 Weekly Post-Trip Inspections and Maintenance

24.03.01 Inspection of the Engine Compartment

WARNING:
Washer fluids may be flammable and poisonous. Do not expose washer fluid to an open flame or any burning material, such as a cigarette. Always comply with the washer fluid manufacturer's recommended safety precautions.

1. Check the windshield washer reservoir fluid level. The reservoir is usually located near the right-hand frame rail. See Fig.365,Windshield Washer Reservoir.

1. Washer Fluid Filler Cap

Fig 367, Windshield Washer Reservoir

2. After resetting the air intake restriction indicator during the daily pretrip inspection, check the indicator again with the engine off.

   2.a Check an indicator with graduations to see if air restriction exceeds the value shown in Table.46, **Air Intake Maximum Restriction Values (in H 2O)**.

   Check a go/no-go indicator without graduations to see if the colored bar shows through the clear window.

Table 46, Air Intake Maximum Restriction Values (in H 2O)

Air Intake Maximum Restriction Values (in H2O)	
Engine Make	GHG14, GHG17, and GHG21 Engines
Cummins	25
Detroit	18

Table 46, Air Intake Maximum Restriction Values (in H 2O)

   2.b If air restriction exceeds the maximum allowable value, operate the vehicle for one more day, making sure not to run the engine over rated rpm. See the engine operation manual for more information on rated rpm for your engine.

   2.c If air restriction exceeds the maximum value again, replace the air cleaner. For instructions, refer to **Group 09** of the *Western Star Workshop Manual* .

3. Inspect water evacuation components.

   3.a If equipped with optional pre-cleaners, inspect the vacuator valves. Each pre-cleaner has two vacuator valves: one installed on the pre-cleaner and one in the hood interior. See Fig. 366,Hood Vacuator Valves (hood interior shown). Make sure the lips of each valve are undamaged and pliable, free of debris, and remain closed during inspection.

3.b Inspect the rain tray installed at the base of the windshield. Ensure that the seal on the forward edge of the rain tray is in good condition.

3.c Inspect the drain hoses installed on the rain tray. Both hoses should be securely attached to the rain tray and direct water down the aft side of the front fenders.

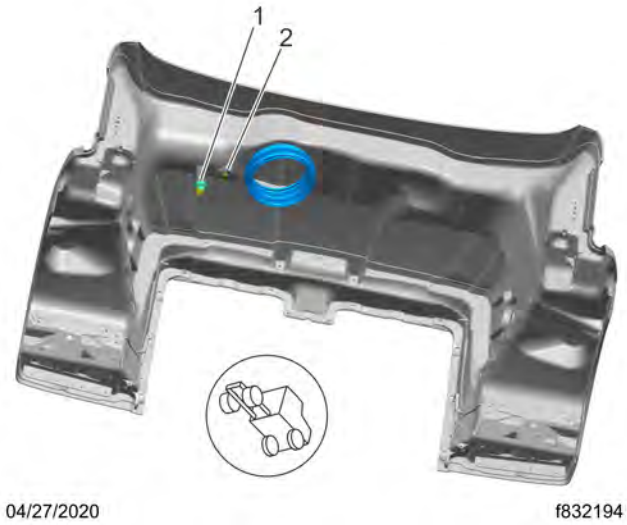

1. Vacuator Valve on Pre-Cleaner
2. Vaculator Valve in Hood

Fig 368, Hood Vacuator Valves (hood interior shown)

4. If the vehicle is equipped with an Allison automatic transmission, check the automatic transmission fluid level.
5. Check for water in the fuel/water separator, if equipped.

IMPORTANT: When draining fluid from a fuel/water separator, drain the fluid into an appropriate container and dispose of it properly. Many jurisdictions now issue fines for draining fuel/water separators onto the ground.

5.a Place a suitable container under the fuel/water separator.

NOTE: A hose may be used to direct water into the container. On older DAVCO models, the drain valve has a 1/2-inch (12.7-mm) pipe with threads. Use a hose with a 1/2-inch pipe thread to fit correctly and open the drain valve by turning it one-quarter revolution. On new DAVCO models, the drain valve has a 3/4-inch (19-mm) slip-on hose connection; pipe threads are no longer used. Open the drain valve by turning it one to one-and-a-half revolutions.

5.b If the engine is equipped with a built-in water separator, loosen the drain valve, and allow the water to run out. Close the drain valve, taking care not to overtighten it.

5.c *Detroit/Racor Models* : Turn the drain plug counterclockwise to open it.

DAVCO Models : Remove the vent cap and open the drain. See Fig.367,DAVCO Fuel Pro 485.

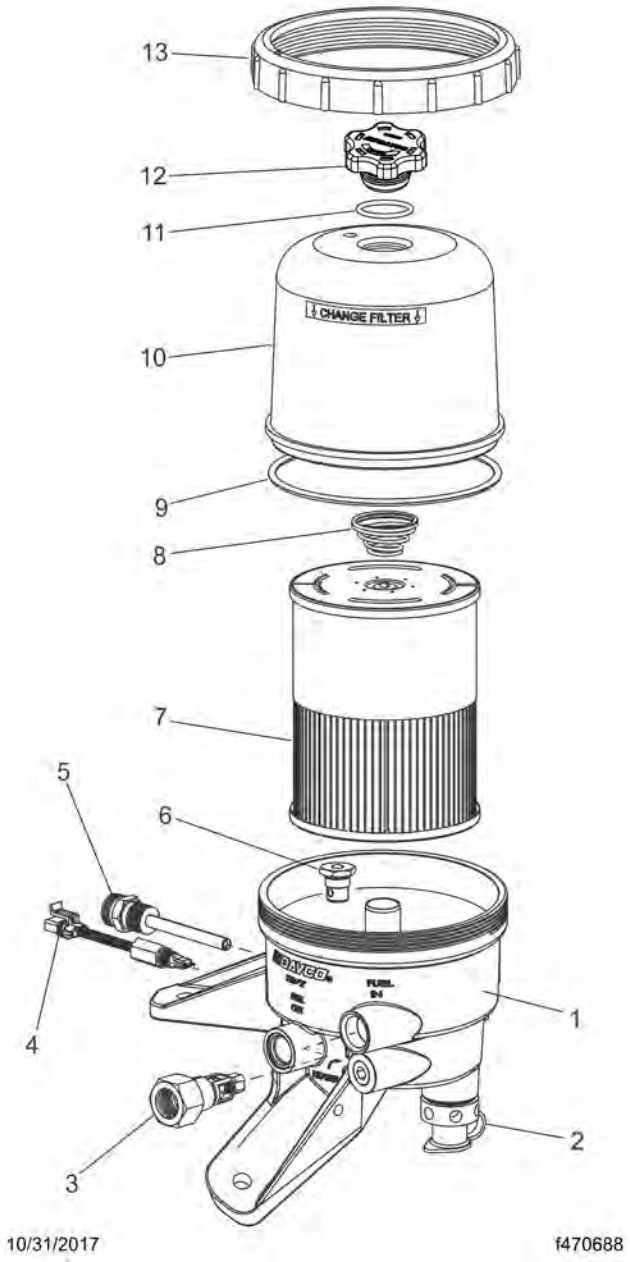

1. Lower Housing
2. Drain Valve
3. Inlet Port/Check Valve
4. 12VDC Pre-Heater
5. 120VAC Pre-Heater
6. Bypass Valve
7. Filter Element
8. Spring
9. Cover O-Ring
10. Clear Cover
11. Vent Cap O-Ring
12. Vent Cap
13. Collar

Fig 369, DAVCO Fuel Pro 485

5.d Stop draining fluid when fuel begins to drain out.

Detroit/Racor Models : turn the drain plug clockwise to close it.

DAVCO Models : close the drain valve. Install and hand-tighten the vent cap.

6. Inspect the steering components.

6.a Inspect tie rods, steering arms, and the drag link for signs of looseness (i.e., shiny spots or rust tracks).

6.b Check the steering gear mounting bolts and pitman arm nut, if equipped, for signs of looseness. See Fig. 368, **Standard Steering Gear Fasteners**.

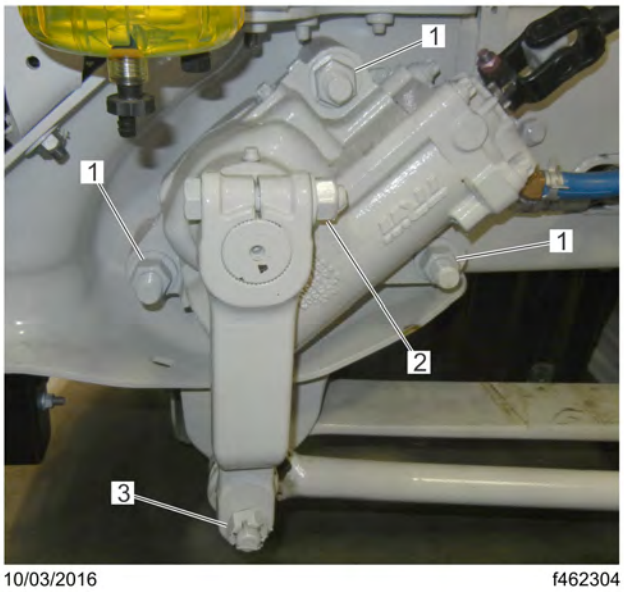

1. Steering Gear Mounting Bolts
2. Pitman Arm Pinch Bolt Nut (if equipped)
3. Drag Link Nut

Fig 370, Standard Steering Gear Fasteners

6.c Check the drag link nuts for missing cotter pins.

6.d Inspect the steering intermediate shaft and end yokes for excessive looseness or other damage.

NOTICE:
Do not drive with a drive belt that is visibly worn or damaged. If it fails, the lack of coolant flow could rapidly cause damage to engine components.

7. Inspect the serpentine drive belts for signs of glazing, frayed edges, breaks, cracks, or oil contamination.

24.04 Monthly Post-Trip Inspections and Maintenance

24.04.01 Inspection of the Brake Component

Walk around the vehicle and inspect brake system components for visible damage.

NOTE: Some vehicles may be equipped with a brake check valve on the dash, which allows the driver to set the service brakes and exit the vehicle to check the brake system for leaks. The parking brakes must be applied before the brake check valve will function.

1. Inspect all visible brake system components for missing fasteners or signs of looseness, such as rust tracks.

NOTICE:
If the external breather tube or breather cap is missing or incorrectly installed, road dirt and debris can adversely affect the operation of the brake chamber. Once inside of the chamber, dirt and debris can cause the internal parts of the chamber to deteriorate faster.

2. Inspect the exterior surfaces of brake chambers for damage. Make sure that breather holes are open and free of debris.

   NOTE: Do not route air brake lines on top of anything likely to be stepped on.

3. Inspect air brake lines for dents, swelling, kinks, twisting, abrasion, and damage, especially near moving parts.
4. Inspect flex air lines for deterioration or signs of abrasion.
5. Inspect for cracked, worn, or oil-contaminated brake linings and brake drums (or rotors).
6. Check the thickness of the brake linings. Replace brake linings on all brake assemblies on the axle if any brake linings are worn to less than approximately 1/4 inch (6.4 mm) at the thinnest point.

24.04.02 Inspection of the Saddle Tank Areas

WARNING:
When draining the air reservoir, do not look into the air jets or direct them toward anyone. Dirt or sludge particles may be in the airstream and could cause injury.

NOTICE:
If the water drained from the air reservoirs is cloudy or oily, it may indicate a problem with the compressor. If oil is allowed to contaminate the air dryer, it will not remove the water from the air brake system, which could adversely affect braking.

1. Drain the brake system air reservoirs (reservoirs with automatic drain valves only).

NOTE: Battery locations vary between vehicles.

2. Inspect the batteries.

WARNING:
Battery posts, terminals, and related accessories contain lead and lead compounds, chemicals known to the State of California to cause cancer and reproductive harm. To prevent possible personal injury, always wash your hands after handling battery parts and related accessories.

2.a Remove the battery box cover and inspect all visible battery cables for loose wiring or damage.

2.b Check that the battery hold-down is secure.

IMPORTANT: Aerodynamic components decrease drag force as a vehicle moves, thereby improving fuel efficiency. If replacement of an aerodynamic component is necessary, replacement components must meet or exceed the drag reduction performance of the originally installed component in order to maintain compliance with greenhouse gas and fuel efficiency regulations.

3. Inspect the following aerodynamic components, if equipped, for structural damage, cracks, or wear.
   - Roof fairing/deflector
   - Cab/sleeper extenders

24.04.03 Inspection and Adjustments of the Engine Compartment

IMPORTANT: If replacement of the hood or bumper is necessary, the replacement component must meet or exceed the drag reduction performance of the originally installed item in order to maintain compliance with greenhouse gas and fuel efficiency regulations.

NOTE: Anytime a hood is adjusted, removed, or reinstalled, the headlamp aim should be checked.

1. Inspect the bumper and hood for structural damage, cracks, or wear.
2. Check the hydraulic clutch reservoir, if equipped. If necessary, add DOT 4 brake fluid.
3. Inspect the radiator and heater hoses, including the clamps and support brackets.

3.a Inspect the radiator and charge air cooler for damage and accumulated debris. Straighten bent or damaged fins to permit airflow across all areas of the cores.

NOTE: When traveling through areas of high insect concentration, it may be necessary to clean the exterior of the radiator or the charge air cooler core as often as every 200 miles (320 km).

3.b Make sure the radiator inlet and outlet hoses are pliable and are not cracking or ballooning.

3.c Make sure the heater hoses are pliable and are not cracking or ballooning.

3.d Tighten hose clamps as necessary.

IMPORTANT: Do not overtighten hose clamps, as hose life can be adversely affected.

3.e Ensure hose support brackets are securely fastened. Make sure hoses are not located near sources of wear, abrasion, or high heat.

4. Check the steering wheel for excessive play.

4.a Start the engine. With the front tires straight ahead, turn the steering wheel until motion is observed at the front wheels.

4.b Align a reference mark on the steering wheel to a rule, then slowly turn the steering wheel in the opposite direction until motion is again detected at the wheels.

4.c Measure the lash (free play) at the rim of the steering wheel. Excessive lash exists if steering wheel movement exceeds 2-1/4 inches (57 mm) with an 18-inch (450-mm) steering wheel.

4.d If there is excessive lash, check the steering system for wear or incorrect adjustment before operating the vehicle.

25.01 Hazard Warning Lights 414
25.02 Fire Extinguisher 414
25.03 Fire in the Cab 414
25.04 Emergency Equipment 415
25.05 Emergency Starting With Jumper Cables 415
25.06 Raising and Lowering a Vehicle 417
25.06.01 Raising a Vehicle with Air Suspension 417
25.06.02 Lowering a Vehicle with Air Suspension 418
25.06.03 Raising a Vehicle without Air Suspension 418
25.06.04 Lowering a Vehicle without Air Suspension 419
25.07 Front Towing Hookup With Removable Tow Hooks 419

25. In An Emergency

25.01 Hazard Warning Lights

The hazard warning light switch is located on the dash. See Fig.369,Hazard Warning Switch. The hazard lights can be activated regardless of the ignition switch position.

To activate the hazard lights, push the center of the switch once. The switch will blink at the same rate that the hazard lights flash. Push the switch again to turn them off. All the turn signal lights on the vehicle and trailer, as well as the turn signal indicators in the ICU, flash simultaneously when the hazard lights are activated.

Fig 371, Hazard Warning Switch

25.02 Fire Extinguisher

An optional factory-installed fire extinguisher may be located in the cab. It is usually stored by the driver’s door or in the sleeper baggage compartment.

25.03 Fire in the Cab

The incidence of fire in heavy- and medium-duty trucks is rare, according to data from the National Highway Traffic Safety Administration. Federal Motor Vehicle Safety Standard #302 limits the flammability of specified materials used inside the cab, but despite this, most materials will burn. The cab of this vehicle contains urethane foam, which is of concern in this respect.

WARNING:

Do not allow flames, sparks, or any other heat sources (such as cigarettes or light bulbs) to contact materials in the cab. Any materials in the cab in contact with these heat sources could catch fire and cause serious personal injury or vehicle damage.

Immediately bring the vehicle to a safe stop, apply the parking brake, turn off the ignition, and get out of the vehicle.

25.04 Emergency Equipment

Emergency equipment and tools may be supplied in the cab or sleeper baggage compartment. The equipment may include: a first aid kit, triangular reflectors, flares, a smoke/CO2 detector, methane detection system, or a tool box.

WARNING:
Use extreme care when placing flares in emergency situations that involve exposure to flammable substances such as fuel. An explosion or fire could occur causing serious personal injury.

If there is an emergency while driving, carefully pull off the road. Turn on the hazard warning lights. Place the flares and reflector along the side of the road to alert other drivers that an emergency situation exists.

25.05 Emergency Starting With Jumper Cables

When using jumper cables, follow the instructions below.

WARNING:
Batteries release explosive gas. Do not smoke when working around batteries. Put out all flames and remove all sources of sparks or intense heat in the vicinity of the battery. Do not allow the vehicles to touch each other. Do not lean over the batteries when making connections, and keep all other persons away from the batteries. Failure to follow these precautions could lead to severe personal injury as a result of an explosion or acid burns.

NOTICE:
Make sure both electrical systems are the same voltage. Electronic devices on both vehicles can be damaged when connected to a vehicle with a different operating voltage.

NOTE: On vehicles equipped with optional under-hood jump start posts, connect to these posts instead of the batteries.

1. Apply the parking brakes and turn off the lights and all other electrical devices.
2. Remove the battery box cover.

NOTICE:
Always connect the battery, jumper cables, and charger correctly (positive-to-positive and negative-to-negative). Connecting a charging device backwards (positive-to-negative) can severely damage the vehicle electrical content and cause non-warrantable failures.

3. Connect the positive (+) jumper cable to the positive battery post or jump start post on the vehicle needing the jump start. See callout A in Fig. 370,Jumper Connections on Vehicle Needing Jump Start.

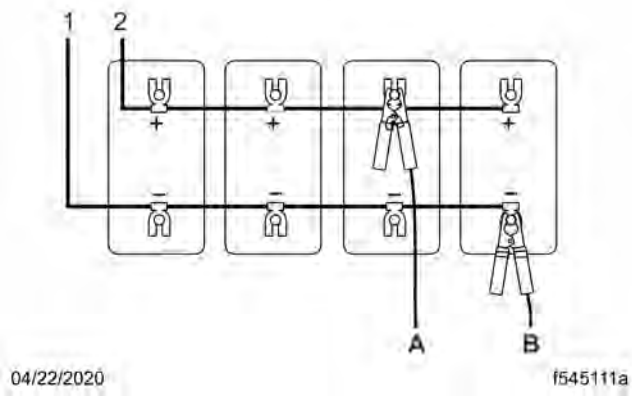

A. + Jumper Cable to Connect First and Disconnect Last
B. – Jumper Cable to Connect Last and Disconnect First
1. – Hardline Battery Cable of Vehicle Needing the Jump
2. + Hardline Battery Cable of Vehicle Needing the Jump

Fig 372, Jumper Connections on Vehicle Needing Jump Start

4. Then connect the other end of the positive jumper cable to the positive battery or jump start post of the vehicle providing the jump start.

WARNING:
Do the next step exactly as instructed and do not allow the clamps of one cable to touch the clamps of the other cable. Otherwise, a spark could occur near a battery, possibly resulting in severe personal injury from explosion or acid burns.

5. Connect one end of the negative jumper cable to the negative battery or jump start post of the vehicle providing the jump start.
6. Then connect (ground) the other end of the cable to a negative battery or jump start post on the vehicle needing a jump start. See callout B in Fig. 370,Jumper Connections on Vehicle Needing Jump Start.
7. Start the engine of the vehicle providing the jump start and let the engine run a few minutes to charge the batteries of the other vehicle.
8. Attempt to start the engine of the vehicle with the batteries receiving the charge. Do not operate the starter longer than 30 seconds, and wait at least two minutes between starting attempts to allow the starter to cool.
9. When the engine starts, let it idle a few minutes.

WARNING:
Do the next step exactly as instructed and do not allow the clamps of one cable to touch the clamps of the other cable. Otherwise, a spark could occur near a battery, possibly resulting in severe personal injury from explosion or acid burns.

10. Disconnect the negative (grounded) jumper cable from the vehicle that needed the jump start. See callout B in Fig. 370,Jumper Connections on Vehicle Needing Jump Start.

11. Then disconnect the other end of the jumper cable from the vehicle that provided the jump start.
12. Disconnect the positive jumper cable from the positive battery or jump start post of the vehicle that provided the jump start.
13. Then disconnect the other end of the positive jumper cable from the positive battery or jump start post of the vehicle that received the jump start. See callout A in Fig. 370,Jumper Connections on Vehicle Needing Jump Start.
14. Install the battery box cover; be sure it is positioned properly before fastening the latches.

25.06 Raising and Lowering a Vehicle

25.06.01 Raising a Vehicle with Air Suspension

1. Park the vehicle on a level surface, set the parking brakes, and shut down the engine. Chock the tires.

WARNING:
Remove the air from the suspension. Failure to remove the air from the suspension may cause the vehicle to move or shift on the jack stands as air pressure drains from the system; this could cause the vehicle to fall, resulting in damage to the vehicle, serious injury, or death.

2. Exhaust all air from the air suspension.

WARNING:
Do not use bottle jacks to raise the vehicle. Always use floor jacks. Bottle jacks can slip, allowing the vehicle to fall, which could result in damage to the vehicle, serious injury, or death.

IMPORTANT: Only lift unloaded vehicles and vehicles disconnected from trailers. Unload vehicles with bodies (drilling rigs, mixers) as much as possible.

3. Place a floor jack under the axle housing, the clamp group, or the frame rail.

NOTICE:
Do not place jack stands under any of the suspension components; doing so could cause suspension component damage. Jack stands can be placed at any point below the axle, including the differential area.

4. Raise the vehicle. Add additional jack stands, as needed, under the axles to support the vehicle.

25.06.02 Lowering a Vehicle with Air Suspension

WARNING:
Do not use bottle jacks to raise the vehicle. Always use floor jacks. Bottle jacks can slip, allowing the vehicle to fall, which could result in damage to the vehicle, serious injury, or death.

NOTICE:
Do not place jack stands under any of the suspension components; doing so could cause suspension component damage. Jack stands can be placed at any point below the axle, including the differential area.

1. Using the floor jack, raise the vehicle to remove any jack stands used to support the vehicle.
2. Slowly lower the vehicle to the ground.
3. Inflate the air suspension, and check for proper operation. Refer to **Group 32** in the *47X and 49X Workshop Manual* for instructions.

25.06.03 Raising a Vehicle without Air Suspension

1. Park the vehicle on a level surface, set the parking brakes, and shut down the engine. Chock the tires.

   WARNING:
   Do not use bottle jacks to raise the vehicle. Always use floor jacks. Bottle jacks can slip, allowing the vehicle to fall, which could result in damage to the vehicle, serious injury, or death.

   IMPORTANT: Only lift unloaded vehicles and vehicles disconnected from trailers. Unload vehicles with bodies (drilling rigs, mixers) as much as possible.

2. Place a floor jack under the axle housing, the clamp group, or the frame rail.

   NOTICE:
   Do not place jack stands under any of the suspension components; doing so could cause suspension component damage. Jack stands can be placed at any point below the axle, including the differential area.

3. Raise the vehicle. Add additional jack stands, as needed, to support the vehicle.

25.06.04 Lowering a Vehicle without Air Suspension

WARNING:
Do not use bottle jacks to raise the vehicle. Always use floor jacks. Bottle jacks can slip, allowing the vehicle to fall, which could result in damage to the vehicle, serious injury, or death.

NOTICE:
Do not place jack stands under any of the suspension components; doing so could cause suspension component damage. Jack stands can be placed at any point below the axle, including the differential area.

1. Using the floor jack, raise the vehicle to remove any jack stands used to support the vehicle.
2. Slowly lower the vehicle to the ground.

25.07 Front Towing Hookup With Removable Tow Hooks

NOTICE:
Towing the truck from the front and removing all of the drivelines is the approved method for towing DTNA products. Towing any other way is not preferred.

DANGER:
When working on the vehicle, shut down the engine, set the parking brake, and chock the tires. Before working under the vehicle, always place jack stands under the frame rails to ensure the vehicle can not drop. Failure to follow these steps could result in serious personal injury or death.

WARNING:
Do not tow an unbraked vehicle if the combined weight of both vehicles is more than the sum of the gross axle weight ratings (GAWR) of the towing vehicle. Otherwise brake capacity will be inadequate, which could result in personal injury or death.

Tow hooks are not designed for on-road towing of the vehicle, but to recover and move the vehicle to a position where it can be hooked up properly for front towing.

NOTICE:

When using tow hooks to move the vehicle, do not pass a sling (for example, a rope or chain) from one hook to another. Known as reeving, this practice is ***not*** permissible in most industrial applications of towing and hoisting. Reeving can overload the hooks and result in damage to the vehicle. See Fig.371,, page 420.

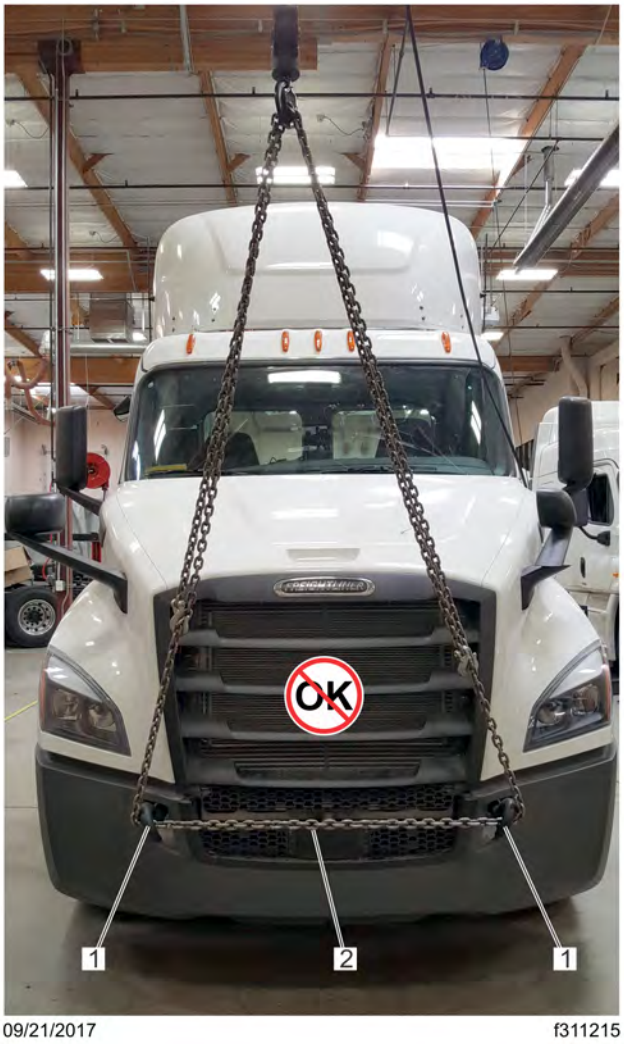

Fig 373, Reeving

IMPORTANT: Do not reeve when towing.

1. Tow Hook
2. Chain

1. Disconnect the battery ground cables.

NOTICE:
Failure to protect the frame rails from the chains could cause damage, leading to eventual frame failure.

2. On dual drive axles, if the vehicle is to be lifted and towed, chain the forward rear-axle assembly to the vehicle frame. Use protection to keep the chains from damaging the frame.
3. Open the hood. Remove the tow hooks, located behind the driver's-side bumper. See Fig.372,Tow Hooks. Close and latch the hood.

NOTICE:
New or ungreased tow hooks may be hard to install. Tow hooks that are not properly installed may be damaged or break.

4. Install the tow hooks onto the tow hook receivers through the tow hook holes in the bumper, rotating the hooks so the hook opening faces down. See Fig.373,Tow Hooks Installed, Facing Down. Pull the tow hooks to ensure they are securely engaged in the tow hook receivers.

06/14/2017 f130146

Fig 374, Tow Hooks

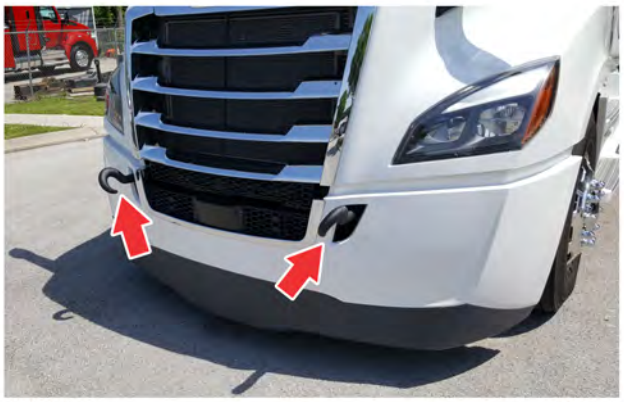

06/14/2017 f130147

Fig 375, Tow Hooks Installed, Facing Down

5. Lower the stinger assembly so that it is level and approximately 1 inch (0.3 cm) off the ground. Back the tow truck so that the crossbar with lift adaptors is within 6 inches (15 cm) of the Aero bumper. See Fig. 379,Positioning the Stinger with Lift Adaptors Under the Axle.

06/07/2022 f130149

Fig 376, Positioning the Stinger Assembly

NOTICE:

When using tow hooks to move the vehicle, do not pass a sling (for example, a rope or chain) from one hook to another. Known as reeving, this practice is *not* permissible in most industrial applications of towing and hoisting. Reeving can overload the hooks and result in damage to the vehicle.

6. Pull the tow cables out of the tow truck and connect the tow cable lifting hooks onto the tow hooks, then extend the recovery boom within 4 to 6 inches (10 to 15 cm) of being vertical of the tow hooks. See Fig. 377,Lift Adaptors Installed on the Crossbar.
7. Lift the front of the truck until there is enough clearance for the stinger and crossbar to pass under the bumper. See Fig.378,Backing the Tow Truck with Lift Adaptors on the Crossbar.

If enough clearance cannot be gained with a single lift, jack stands or other means capable of supporting the weight on the front axle must be used while the cables are shortened to allow a second lift.

Fig 377, Tow Cables Connected to the Tow Hooks

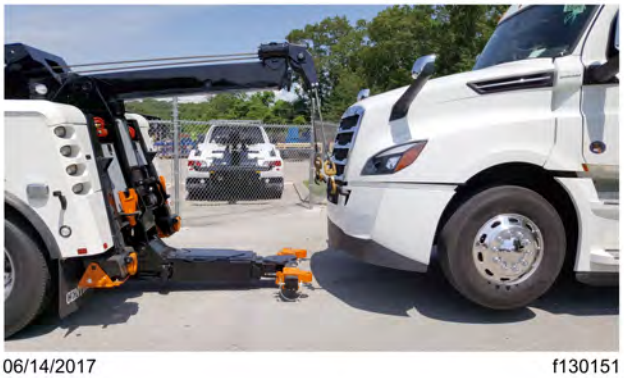

Fig 378, Moving the Stinger and Crossbar Under the Bumper

WARNING:
Failure to chock the tires or connect the tow truck's air brake system before releasing the spring parking brakes could allow the disabled vehicle to suddenly roll. This could cause property damage or personal injury.

8. Chock the rear tires.

NOTICE:
Reference the applicable axle manufacturer's information to avoid damaging the axle when towing the truck.

9. Use mid-rise or high-rise forks, or lift adaptors (part number 0200020) on the crossbar to provide clearance for the aerodynamic bumper. See Fig.379,Positioning the Stinger with Lift Adaptors Under the Axle and Fig. 380,Stinger with Lift Adaptors Under the Axle (tow truck shown).

Fig 379, Lift Adaptors Installed on the Crossbar

Fig 380, Backing the Tow Truck with Lift Adaptors on the Crossbar

10. Extend the stinger and place the lift adaptors under the axle. Make certain the lift adaptors are under the front suspension springs between the U-bolts. See Fig.379,Positioning the Stinger with Lift Adaptors Under the Axle and See Fig. 380,Stinger with Lift Adaptors Under the Axle (tow truck shown).

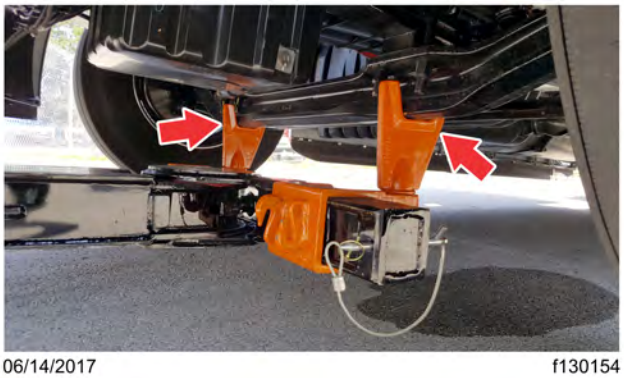

Fig 381, Positioning the Stinger with Lift Adaptors Under the Axle

Fig 382, Stinger with Lift Adaptors Under the Axle (tow truck shown)

NOTICE:
Failure to remove the driveline(s) or the drive axle shafts when towing the vehicle with the rear wheels on the ground could result in damage to the transmission and other parts.

11. Secure the axle to the crossbar with a chain or ratchet strap.
12. Use a paint pen to mark the drivelines in as built condition, and then remove the driveline, the interaxle driveline (if equipped), for each axle that may touch the ground during the towing process. Store the drivelines and U-joints in a secure location so they will not come off during transport.
13. Remove the tow cables from the tow hooks and retract the recovery boom. See Fig. 381,Retracting the Recovery Boom.

Fig 383, Retracting the Recovery Boom

14. Remove the tow hooks from the bumper.

IMPORTANT: On trucks equipped with a front air suspension, either air pressure must be supplied to the secondary air system or the front suspension must be blocked to operating height with wooden spacers and the axle chained to the frame to prevent damage to the truck.

15. Connect the air and electrical supply lines from the tow truck to the truck being towed.
16. Connect the clearance lights, taillights, and signal lights. Connect any special towing lights required by local regulations.
17. Release the park brake and remove the chocks from the rear tires.
18. Use the stinger to pull the truck close to the back of the tow truck for final towing position. See Fig. 382,Final Towing Position.

Fig 384, Final Towing Position

19. Connect the safety chains. See Fig.383,Safety Chains Connected on the Towed Vehicle.

Fig 385, Safety Chains Connected on the Towed Vehicle

26.01 Terms of Use 430
26.01.01 General Information 430
26.01.02 Telematics Information We Collect and Why We Collect It 430
26.01.03 What We Do with Telematics Information and Who We Share It With 430
26.01.04 Collection Method 431
26.01.05 Safeguards 431
26.01.06 Your Consent 431
26.01.07 Your Rights 431
26.01.08 Privacy Statement Changes 431
26.02 Frequency Bands and Maximum Transmission Output 431
26.02.01 Wireless Applications on the Vehicle 431
26.02.02 The Common Telematics Platform 432

26. Telematics Data

26.01 Terms of Use

26.01.01 General Information

Your vehicle may be equipped with one or more devices that gather information described below regarding the Vehicle and the environment in which it may be operating (‘Telematics Information’). The devices may periodically send telematics information to Daimler Truck North America LLC (DTNA). Additionally, DTNA and its dealers may manually retrieve telematics information from the devices for the purposes described below.

26.01.02 Telematics Information We Collect and Why We Collect It

The telematics information we collect may include, but is not limited to, information regarding the performance, operation, location, speed, trips, travel history, stop and idle times, fuel consumption, fault codes and diagnostic information, steering and braking performance, air bag deployment and seatbelt use, decelerations, and other information relating to the performance, operation, health and safety of your vehicle. DTNA gathers this information in order to improve the performance, operation, health and safety of your vehicle and other DTNA vehicles and products, in the following ways, among others:

- **To enable your subscription services.** DTNA and other third party service providers have developed a variety of applications and services that are now available to you to optimize the performance, use, reliability and safe operation of your vehicle. These services are enabled by the telematics information we receive from your vehicle, and will likely be made more effective in the future by the use of that telematics information and similar information we receive from other DTNA vehicles.
- **To make your vehicle safer and to improve its performance.** Depending on the type of device installed on your vehicle, DTNA may periodically update your vehicle’s on-board software to improve the performance and safe use of the vehicle. We may need to obtain certain telematics information to ensure the effectiveness of these updates.
- **To monitor and manage the health and efficiency of your vehicle.** Telematics information from your vehicle may be used by DTNA and its affiliates, dealers and service providers to diagnose and resolve problems with your vehicle more effectively and to help you maintain it.
- **To improve your customer service experience.** Telematics information may be used by DTNA and its affiliates, dealers and service providers to provide you a more efficient and effective customer service experience in conjunction with vehicle service, maintenance, field service campaigns and recalls.
- **For product development and product improvement.** Telematics information may be analyzed and used to identify and resolve performance and safety issues and to develop improvements to our products that will benefit you and our future customers.
- **To develop more meaningful product marketing.** Telematics information may be used to provide more customized and meaningful information to our customers regarding products and services that best satisfy their operational requirements and improve the performance of their businesses.
- **To help match our customers with the right products.** Telematics information may be used to develop future products and services that best satisfy the operational requirements of our customers.

26.01.03 What We Do with Telematics Information and Who We Share It With

DTNA may use telematics information for any purpose allowed by law, including but not limited to using the information for any of the purposes described in this chapter. DTNA may share telematics information with its service providers, affiliates, subsidiaries, dealers and distributors, but only for lawful business purposes. This may include third parties who process information on behalf of DTNA, third parties who you authorize directly to receive information from us, and law enforcement agencies pursuant to applicable law.

DTNA may also combine telematics information it obtains from your vehicle with data from others, anonymize and de-identify that aggregated data (‘Aggregated Data’), and use and disclose that Aggregated Data and derivatives of it indefinitely and for any purpose whatsoever, including sharing it with third parties for any purpose without restriction. You will not have any rights in any Aggregated Data or any derivatives or proceeds of it. DTNA will be the exclusive owner of all rights, title and interests in and to all Aggregated Data. DTNA shall not have any obligation to provide any Aggregated Data to you or to compensate you for any use or disclosure of any Aggregated Data.

26.01.04 Collection Method

The telematics information may be transmitted automatically or manually from the devices on your vehicle to DTNA or Detroit Diesel Corporation (DDC) through diagnostic tools, including but not limited to DDC DiagnosticLink.

26.01.05 Safeguards

DTNA will use reasonable data security systems and procedures in an effort to protect telematics information from unauthorized use, access, disclosure, distribution, loss or alteration. We do this through physical, electronic and procedural safeguards that are designed to protect the confidentiality, integrity and availability of telematics information. However, no security system is perfect. DTNA cannot guarantee that telematics information will not be hacked, deleted, intercepted or altered. DTNA will also require other parties to whom telematics information is disclosed to take reasonable steps to protect the telematics information from unauthorized use, access, disclosure, distribution, loss or alteration.

26.01.06 Your Consent

By continuing to provide to us, or allowing us to receive or retrieve, telematics information through the devices on your vehicle, you consent to its collection and use as described in this chapter. Although some information may be transferred to and processed in countries without laws providing the same level of data protection as your country, our use and disclosure of your information is subject to these terms of use regardless of where your information is transferred. **If you have subscribed to a subscription service such as Virtual Technician or Detroit Analytics, the Telematics Terms and Conditions for that service will apply to DTNA's collection, storage, use and sharing of the data covered by those Terms and Conditions.**

26.01.07 Your Rights

You may ask DTNA to discontinue receiving and retrieving telematics information from the devices on your vehicle. If you do so, you will be unable to receive telematics subscription services relating to your vehicle and unable to remotely receive important vehicle software updates, among other things. If you are interested in that option, please contact DTNA at: **DetroitConnect@Daimler.com** .

26.01.08 Privacy Statement Changes

DTNA reserves the right to amend these terms of use from time to time. Changes will be reflected in the online version of this document found at:https://dtnacontent-dtna.prd.freightliner.com/content/public/dtna-servicelit/TechLit-Homepage.html?make=western-star. **By continuing to provide to us, or allowing us to receive or retrieve, telematics information through the devices on your vehicle, you consent to and accept those changes.**

NOTE: These terms of use do not apply to aftermarket telematics devices that may be provided by others or configured to send information to someone other than DTNA or its affiliates, dealers or service providers.

26.02 Frequency Bands and Maximum Transmission Output

26.02.01 Wireless Applications on the Vehicle

Table 47, Frequency Bands and Maximum Transmission Output

Frequency Bands and Maximum Transmission Output			
Component	**Service**	**Frequency Band**	**Transmission Output**
CTP2019DTNA	4G LTE	LTE FDD Band 2 LTE FDD Band 4 LTE FDD Band 5 LTE FDD Band 7 LTE FDD Band 17	0.25 W (Power Class 3)
	WLAN (IEEE 802.11b)	2.4 GHz band	20 mW
	WLAN (IEEE 802.11g/n)	2.4 GHz band	20 mW

	Bluetooth	2.4 GHz band	10 mW
	GPS / GLONASS	1575 and 1602 MHz	Receive only

Table 47, Frequency Bands and Maximum Transmission Output

Table 25.1, Frequency Bands and Maximum Transmission Output

26.02.02 The Common Telematics Platform

The Detroit Connect Platform is the connectivity module of Daimler Truck North America. It receives and transmits data in real time and is the interface for all connectivity-related services. Both the Detroit Connect Platform and a valid agreement is required for use of the Detroit Connect Services.

Vehicle antennas (WLAN/BT/CellularNetworks) are located inside and behind the dashboard on the passenger side. In both locations, the shortest possible distance between the antennas and any human or animal body part inside the vehicle cabin is greater than 8 in (20 cm).

Therefore Daimler Truck North America LLC declares that the radio equipment type CTP2019DTNA is in compliance with Directive 2014/53/EU.

CONTACT INFORMATION

For questions, please create a Service Technical Request using the DTTS Application on the DTNA Portal.

Published by
Daimler Trucks North America LLC
4747 N. Channel Ave.
Portland, OR 97217
Printed in U.S.A.